MALE PLUG M8 STRAIGHT SINGLE ENDED

CONTACT POSITION FRONT VIEW:

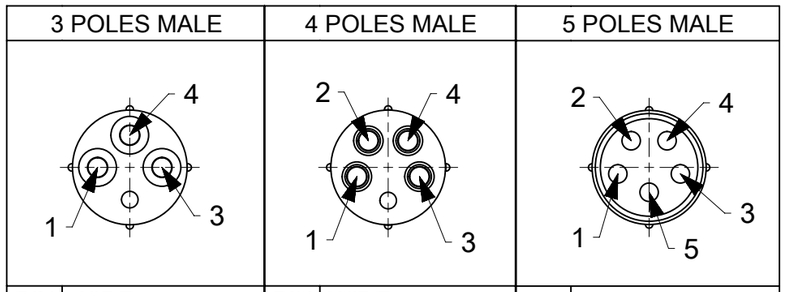

PIN	WIRE	PIN	WIRE	PIN	WIRE
1	BROWN	1	BROWN	1	BROWN
2	-	2	WHITE	2	WHITE
3	BLUE	3	BLUE	3	BLUE
4	BLACK	4	BLACK	4	BLACK
5	-	5	-	5	GREY

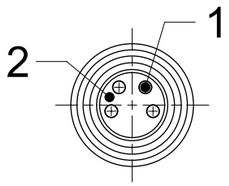

VIEW FROM THE FRONT SIDE

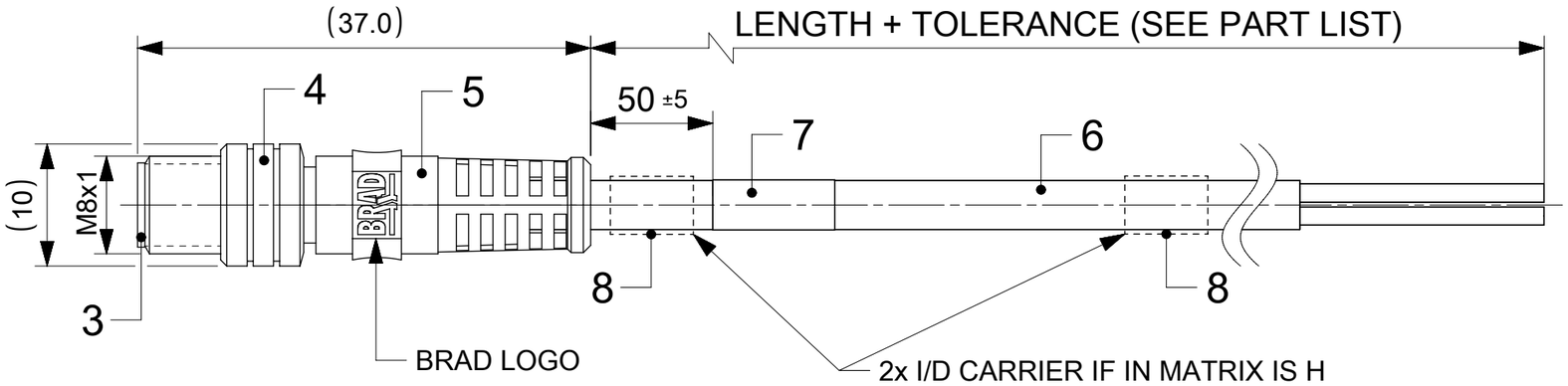

TECHNICAL SPECIFICATION:

CONTACT CURRENT RATING: 3-5 POLES 3 A
VOLTAGE RATING: 3 POLES 60 V
4-5 POLES 30 V
PROTECTION CLASS: IP 67
TEMPERATURE RANGE: -25° C / +80° C

BILL OF MATERIAL

ITEM	QTY.	DESCRIPTION	MATERIAL	FINISH / COLOR
8	0 / 2	ID CARRIER (SEE MATRIX)	PVC	TRANSPARENT
7	1	LABEL OR PRINTING	VINYL / ---	---
6	-	CABLE	SEE MATRIX	---
5	-	OVERMOULDING	TPU	BLACK
4	1	COUPLING NUT M8 MALE	BRASS	NICKEL
3	1	SLEEVE	BRASS	NICKEL
2	1	INSERT MALE	TPU	BLACK
1	3 / 4 / 5	CONTACT M8 MALE	BRASS	SELECTIVE Au OVER Ni

DOCUMENT STATUS | P1 | RELEASE DATE | 2021/11/25 12:27:14

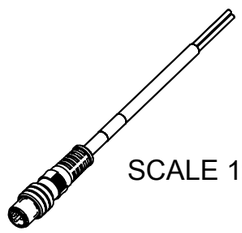

SCALE 1:2

THIS DRAWING CONTAINS INFORMATION THAT IS PROPRIETARY TO MOLEX ELECTRONIC TECHNOLOGIES, LLC AND SHOULD NOT BE USED WITHOUT WRITTEN PERMISSION

FUNCTIONAL SYMBOLS: F/A = 0, F/C = 0, F/P = 0
DIVISIONAL SYMBOLS

DIMENSION UNITS: mm
SCALE: 2:1

GENERAL TOLERANCES (UNLESS SPECIFIED)

ANGULAR TOL	±	1.0 °
4 PLACES	±	
3 PLACES	±	
2 PLACES	±	0.05
1 PLACE	±	0.3
0 PLACES	±	0.5

DRAFT WHERE APPLICABLE MUST REMAIN WITHIN DIMENSIONS

CURRENT REV DESC: FIRST RELEASE

EC NO: 686590
DRWN: RSCHIEBER 2021/11/23
CHK'D: RSILLER 2021/11/25
APPR: RSILLER 2021/11/25

INITIAL REVISION:
DRWN: RSCHIEBER 2021/11/23
APPR: RSILLER 2021/11/25

THIRD ANGLE PROJECTION | DRAWING: A3-SIZE | SERIES: 120086

molex

CSE M8 XP AC MA STR XM SE

PRODUCT CUSTOMER DRAWING

DOCUMENT NUMBER	DOC TYPE	DOC PART	REVISION
1200860183	PSD	000	A

MATERIAL NUMBER	CUSTOMER	SHEET NUMBER
SEE PART LIST	GENERAL MARKET	1 OF 3

FORMAT: master Sheet A3
REVISION: J
DATE: 2020/01/14

ENGINEERING NO. - NUMERICAL CODE (Available parts see PART LIST table. Others on request)

4	0	X	0	0	6	X	X	X	M	X	X	X	*	*

OPTIONS

40 = M8x1 SINGLE ENDED

POLES:
3 = 3 POLE
4 = 4 POLE
5 = 5 POLE

HEADER
006 = MALE STRAIGHT

CABLE TYPE
SEE CABLE SPECIFICATION

UNIT
M = METER

LENGTH EXAMPLE
010 = 1 m
050 = 5 m
100 = 10 m

Overmold color:

Blank (Standard)=Black
A = Grey / G=Black / Y=Yellow
For cables K03, K05, A09, S19, S20 & S26 = Yellow

Coupling Nut:

Blank (Standard)=Knurled Brass Ni Plated
1 = Stainless steel
2 = Nylon
3 = Nickel Plated Brass
4 = Valox (polyester)
5 = Delrin
6 = clear anodized alum
7 = Teflon coat
Blank = 7 for cables: I20, I26, K03, K05, P82, S20 i S26
8 = Type 316 stainless steel
9 = Knurled / Hexagonal SW9 Brass Ni Plated
H= 2 pcs. of I/D Carrier PVC Transparent
(Cables Ixx & P82 always with 2 pcs. of I/D Carrier even if no H in Engineering No.)

CABLE SPECIFICATION

CABLE TYPE	NO. OF WIRES	CROSS SECTION	CABLE JACKET	UL	CSA	TEMP. RATING	STATIC: TEMP. / BENDING RADIUS	DYNAMIC: TEMP. / BENDING RADIUS	DRAG CHAIN	SHIELD
A10	4	0.25mm²	PVC YELLOW	UL 2661/1731	I/II A/B 105°C/300V	105°C	-	-	-	NO
E02	3 / 4 / 5	0.25mm²	PVC BLACK	UL 2464/1729	C22.2 I/II A/B 80°C/300V	-	-30°C to +80°C, 10xO.D.	-10°C to +80°C, 15xO.D.	-	NO
H08	3 / 4 / 5	0.25mm²	PUR BLACK LS0H	UL 21198/10493	C22.2 I/II A/B 80°C/300V	-	-40°C to +80°C, 5xO.D.	-25°C to +80°C, 10xO.D.	2 000 000 cycles, Temp max 60°C	NO
I12	3	0.50mm²	PVC GREY	-	-	-	-25°C to +70°C, 10xO.D.	-5°C to +70°C, 15xO.D.		NO
I02	3 / 4	0.25mm²	PVC (CEI) GREY	-	-	-	-30°C to +70°C	-5°C to +70°C	-	NO
K05	3	0.34mm²	TPE YELLOW	UL ITC OR PLTC	I/II A/B 90°C/300V	105°C	-	-	-	NO
P02	3 / 4 / 5	0.25mm²	PUR / PVC BLACK	-	-	-	-30°C to +80°C, 7xO.D.	-5°C to +80°C, 15xO.D.	-	NO
I70	3	0.50mm²	PVC GREY	-	-	-	-25°C to +70°C, 10xO.D.	-5°C to +70°C, 15xO.D.		NO

THIS DRAWING CONTAINS INFORMATION THAT IS PROPRIETARY TO MOLEX ELECTRONIC TECHNOLOGIES, LLC AND SHOULD NOT BE USED WITHOUT WRITTEN PERMISSION

FUNCTIONAL SYMBOLS
FA = 0
FC = 0
FD = 0
DIVISIONAL SYMBOLS

DIMENSION UNITS: mm
SCALE: 1:1

GENERAL TOLERANCES (UNLESS SPECIFIED)

ANGULAR TOL	±	1.0 °
4 PLACES	±	
3 PLACES	±	
2 PLACES	±	0.05
1 PLACE	±	0.3
0 PLACES	±	0.5

DRAFT WHERE APPLICABLE MUST REMAIN WITHIN DIMENSIONS

CURRENT REV DESC: FIRST RELEASE

EC NO: 686590
DRWN: RSCHIEBER 2021/11/23
CHK'D: RSILLER 2021/11/25
APPR: RSILLER 2021/11/25

INITIAL REVISION:
DRWN: RSCHIEBER 2021/11/23
APPR: RSILLER 2021/11/25

THIRD ANGLE PROJECTION | DRAWING: A3-SIZE | SERIES: 120086

molex

CSE M8 XP AC MA STR XM SE

PRODUCT CUSTOMER DRAWING

DOCUMENT NUMBER	DOC TYPE	DOC PART	REVISION
1200860183	PSD	000	A

MATERIAL NUMBER	CUSTOMER	SHEET NUMBER
SEE PART LIST	GENERAL MARKET	2 OF 3

DOCUMENT STATUS	P1	RELEASE DATE	2021/11/25 12:27:14

FORMAT: master_Sealed-A3
REVISION: J
DATE: 2020/01/14

PART LIST

ITEM	MOLEX PN	ENGINEERING NO	L+TOL.[mm]
1	1200270105	403006E02M050	5000+60
2	1200270364	403006E02M010	1000+40
3	1200270376	404006E02M050	5000+60
4	1200270453	403006P02M040	4000+60
5	1200270459	403006E02M003	300+40
6	1200270547	403006I12M010	1000+40
7	1200270588	405006P02M005	500+40
8	1200270657	405006P02M050	5000+60
9	1200270659	403006I12M006	600+40
10	1200270752	405006P02M020	2000+60
11	1200270877	405006P02C550	550+40
12	1200270911	403006P02M020	2000+60
13	1200270933	403006P02M100	10000+80
14	1200271079	403006P02M010	1000+40
15	1200271179	403006P02M004	400+40
16	1200271200	403006P02M006	600+40
17	1200271327	403006P02M005	500+40
18	1200271332	403006P02M003	300+40
19	1200271420	403006E02M035	3500+60
20	1200271421	403006E02M040	4000+60
21	1200271422	403006E02M060	6000+80
22	1200860183	404006A10M020	2000+60
23	1200860474	403006P02M050	5000+60
24	1200860586	405006P02M040	4000+60
25	1200860588	405006P02M100	10000+80
26	1200868031	405006P02M030	3000+60
27	1200868047	403006I12C550	550+40
28	1200868056	403006E02M006	600+40
29	1200868078	403006H08M050	5000+60
30	1200868087	405006P02M010	1000+40
31	1200868152	405006E02M010	1000+40
32	1200868161	404006E02M010	1000+40
33	1200868164	405006E02M300	30000+160
34	1200868165	405006E02M500	50000+500
35	1200868166	405006E02M600	60000+600
36	1200868173	405006E02M020	2000+40
37	1200868855	405006H08M100	10000+80
38	1200868900	404006H08M005	500+40
39	1200868854	405006H08M050	5000+60
40	1200868695	403006E02M020H	2000+60
41	1200868174	405006E02M050	5000+60
42	1200868175	405006E02M100	10000+80
43	1200868182	405006P02M012	1200+60
44	1200868227	404006H08M050	5000+60
45	1200868228	403006E02M020	2000+60
46	1200868302	403006E02M002	200+40
47	1200868303	403006E02M015	1500+60
48	1200868304	403006E02M025	25000+60
49	1200868305	403006E02M030	3000+60
50	1200868306	403006E02M045	45000+60
51	1200868307	403006E02M100	10000+80
52	1200868308	403006I02C350	350+40
53	1200868309	403006I02C450	450+40
54	1200868310	403006I02M003	300+40
55	1200868311	403006I02M004	400+40
56	1200868312	403006I02M006	600+40
57	1200868313	403006I02M007	700+40
58	1200868314	403006I02M010	1000+40
59	1200868315	403006I02M011	1100+60
60	1200868316	403006I02M014	1400+60
61	1200868317	403006I02M015	1500+60
62	1200868318	403006I02M020	2000+60
63	1200868319	403006I02M030	3000+60
64	1200868320	403006I02M050	5000+60
65	1200868321	403006I02M100	10000+80
66	1200868322	403006I02M150	15000+140
67	1200868366	404006E02C550	550+40
68	1200868367	404006E02M015	1500+60
69	1200868368	404006E02M020	2000+60
70	1200868369	404006E02M100	10000+80
71	1200868370	404006I02M003	300+40
72	1200868371	404006P02M004G	400+40
73	1200868372	404006P02M010	1000+40
74	1200868373	404006P02M020	2000+40
75	1200868374	404006P02M030G	3000+40
76	1200868375	404006P02M050	5000+60
77	1200868720	403006E02M100H	10000+80
78	1200868755	405006P02C180	180+40
79	1200868853	405006H08M010	1000+40
80	1200868684	403006E02M045H	4500+60
81	1200868376	404006P02M050G	5000+60
82	1200868377	404006P02M100	10000+80
83	1200868387	403006E02M150	15000+140
84	1200868390	403006H08M020	2000+60
85	1200868392	404006H08M020	2000+60
86	1200868397	405006H08M020	2000+60
87	1200868408	404006H08M003	300+40
88	1200868409	404006H08M010	1000+40
89	1200868421	403006I12M150	15000+140
90	1200868425	403006I12M050	5000+60
91	1200868426	403006I12M100	10000+80
92	1200868433	403006H08M100	10000+80
93	1200868436	403006I70M150	15000+140
94	1200868437	403006I70M050	5000+60
95	1200868438	403006I70M100	10000+80
96	1200868471	403006E02M020Y	2000+60
97	1200868472	403006E02M150Y	15000+140
98	1200868488	404006H08M100	10000+80
99	1200868496	403006H08M010	1000+40
100	1200868512	405006P02C550Y	550+40
101	1200868514	403006P02M030	3000+60
102	1200868515	403006P02M075	7500+80
103	1200868562	404006P02M002	200+40
104	1200868573	405006E02M030	3000+60
105	1200868680	405006P02M020Y	2000+60
106	1200868681	403006E02M010H	1000+40
107	1200868682	403006E02M035H	3500+60
108	1200868683	403006E02M040H	4000+60

THIS DRAWING CONTAINS INFORMATION THAT IS PROPRIETARY TO MOLEX ELECTRONIC TECHNOLOGIES, LLC AND SHOULD NOT BE USED WITHOUT WRITTEN PERMISSION

FUNCTIONAL SYMBOLS: F/A = 0, F/C = 0, F/P = 0

DIVISIONAL SYMBOLS

DIMENSION UNITS	SCALE
mm	1:1

GENERAL TOLERANCES (UNLESS SPECIFIED)

ANGULAR TOL	±	1.0 °
4 PLACES	±	
3 PLACES	±	
2 PLACES	±	0.05
1 PLACE	±	0.3
0 PLACES	±	0.5

DRAFT WHERE APPLICABLE MUST REMAIN WITHIN DIMENSIONS

CURRENT REV DESC: FIRST RELEASE

EC NO: 686590
DRWN: RSCHIEBER 2021/11/23
CHK'D: RSILLER 2021/11/25
APPR: RSILLER 2021/11/25

INITIAL REVISION:
DRWN: RSCHIEBER 2021/11/23
APPR: RSILLER 2021/11/25

molex

CSE M8 XP AC MA STR XM SE

PRODUCT CUSTOMER DRAWING

DOCUMENT NUMBER	DOC TYPE	DOC PART	REVISION
1200860183	PSD	000	A

THIRD ANGLE PROJECTION	DRAWING	SERIES	MATERIAL NUMBER	CUSTOMER	SHEET NUMBER
	A3-SIZE	120086	SEE PART LIST	GENERAL MARKET	3 OF 3

DOCUMENT STATUS	P1	RELEASE DATE	2021/11/25 12:27:14

FORMAT: master-8-mod-A3
REVISION: J1
DATE: 2021/05/07

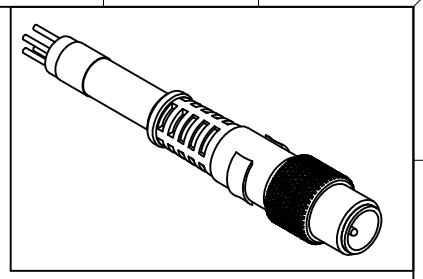

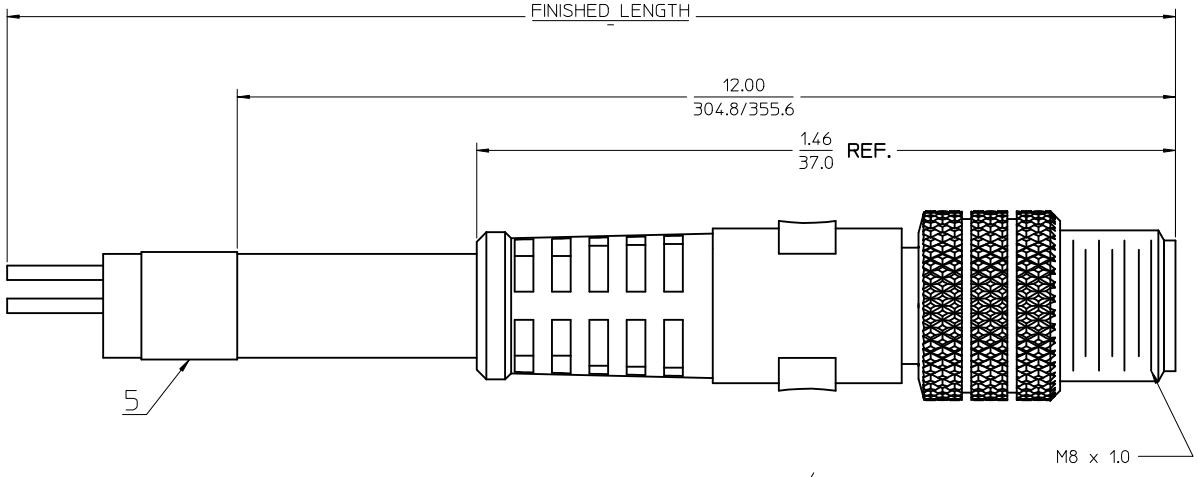

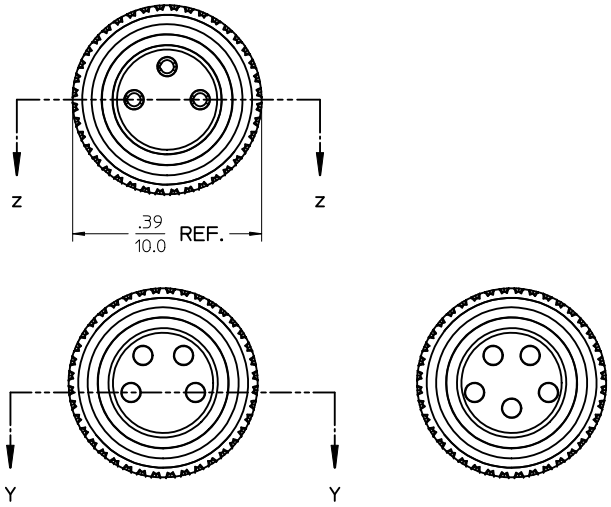

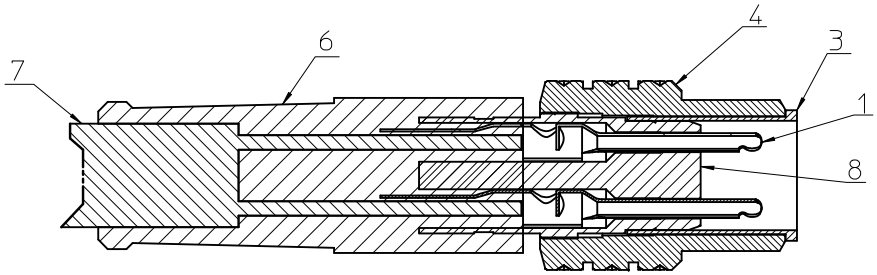

SEC Z-Z
FOR 3 POLE ONLY

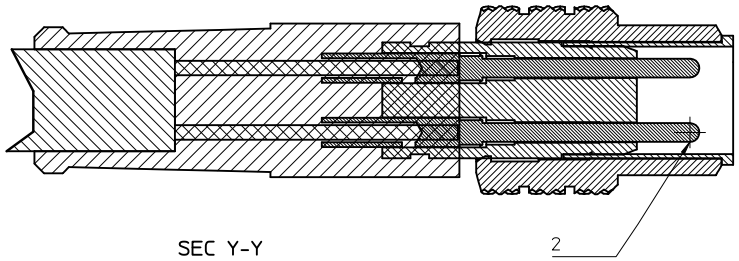

SEC Y-Y
FOR 4-5 POLE ONLY

MALE INSERT FRONT VIEW		
3 POLE	4 POLE	5 POLE
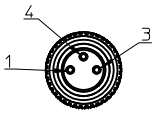	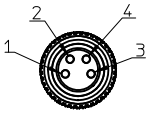	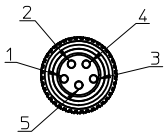
1 BROWN 3 BLUE 4 BLACK	1 BROWN 2 WHITE 3 BLUE 4 BLACK	1 BROWN 2 WHITE 3 BLUE 4 BLACK 5 GREY

ENTER DESCRIPTION
EC NO: WEU2012-0001
DRWN:RSCHIEBER 2011/06/22
CH'KD:RETISSNER 2011/07/13
APPR:CBURGER 2011/07/20
DESCRIPTION
B
REV

QUALITY SYMBOLS
▼=0
▽=0

GENERAL TOLERANCES (UNLESS SPECIFIED)	mm	INCH
4 PLACES	± ---	± ---
3 PLACES	± ---	± ---
2 PLACES	± ---	± .01
1 PLACE	± 0.3	± ---
ANGULAR ±1/2°		

DRAFT WHERE APPLICABLE MUST REMAIN WITHIN DIMENSIONS

DIMENSION STYLE	SCALE	DESIGN UNITS	
IN/MM	5:1	INCH	THIRD ANGLE PROJECTION

DRAWN BY	DATE
BWOODMAN	18/08/09
CHECKED BY	DATE
RSTONE	18/08/09
APPROVED BY	DATE
JFMURPHY	18/08/09

TITLE
CSE M8 XP MA STR
PUR PVC UN

molex MOLEX INCORPORATED

MATERIAL NO. SEE CHART
DOCUMENT NO. SD-120027-002
SHEET NO. 1 OF 2
SIZE C

THIS DRAWING CONTAINS INFORMATION THAT IS PROPRIETARY TO MOLEX INCORPORATED AND SHOULD NOT BE USED WITHOUT WRITTEN PERMISSION

SL.No	DESCRIPTION	MATERIAL	FINISH	ASSEMBLY 3 POLE	ASSEMBLY 4 POLE	ASSEMBLY 5 POLE
				QTY		
1	STAMP & FORM CONTACT	COPPER ALLOY	GOLD PLATED	3		
2	SCREW MACHINE CONTACT	COPPER ALLOY	GOLD PLATED		4	5
3	SLEEVE	BRASS	NICKEL PLATED	1	1	1
4	COUPLING NUT	BRASS	NICKEL PLATED			
5	LABEL	PLASTIC FILM	BLACK/YELLOW			
6	OVER MOLD	TPE	YELLOW			
7	CABLE, 24 AWG, 3 CONDUCTOR	PUR JACKET	BLACK	1		
	CABLE, 24 AWG, 4 CONDUCTOR	PUR JACKET	BLACK		1	
	CABLE, 24 AWG, 4 CONDUCTOR	PVC JACKET	BLACK		1	
	CABLE, 24 AWG, 5 CONDUCTOR	PUR JACKET	BLACK			1
8	INSERT MALE 3 POLE	PUR	BLACK	1		
	INSERT MALE 4 POLE	PUR	BLACK		1	
	INSERT MALE 5 POLE	PUR	BLACK			1

PART NUMBER	DESCRIPTION	FINISHED LENGTH	MATERIAL
1200271079	403006P02M010	1M +60MM -0 [3' 3" +2.19" -0]	PUR
1200270911	403006P02M020	2M +90MM -0 [6' 6" +3.5" -0]	PUR
1200270453	403006P02M040	4M +150MM -0 [13' 1" +6" -0]	PUR
1200860474	403006P02M050	5M +150MM -0 [16' 4" +6" -0]	PUR
1200860583	403006P02M060	6M +150MM -0 [19' 7" +6" -0]	PUR
1200270933	403006P02M100	10M +300MM -0 [32' 4" +12" -0]	PUR
1200868372	404006P02M010	1M +60MM -0 [3' 3" +2.19" -0]	PUR
1200868373	404006P02M020	2M +90MM -0 [6' 6" +3.5" -0]	PUR
1200860584	404006P02M040	4M +150MM -0 [13' 1" +6" -0]	PUR
1200868375	404006P02M050	5M +150MM -0 [16' 4" +6" -0]	PUR
1200860585	404006P02M060	6M +150MM -0 [19' 7" +6" -0]	PUR
1200271137	404006P02M100	10M +300MM -0 [32' 4" +12" -0]	PUR
1200270752	405006P02M020	2M +90MM -0 [6' 6" +3.5" -0]	PUR
1200860586	405006P02M040	4M +150MM -0 [13' 1" +6" -0]	PUR
1200270657	405006P02M050	5M +150MM -0 [16' 4" +6" -0]	PUR
1200860587	405006P02M060	6M +150MM -0 [19' 7" +6" -0]	PUR
1200860588	405006P02M100	10M +300MM -0 [32' 4" +12" -0]	PUR
1200868161	404006E02M010	1M +60MM -0 [3' 3" +2.19" -0]	PVC
1200868368	404006E02M020	2M +90MM -0 [6' 6" +3.5" -0]	PVC
1200270376	404006E02M050	5M +150MM -0 [16' 4" +6" -0]	PVC

SPECIFICATION
Protection Class - IP67
Voltage Rating - 3 Pole/60V, 4+5 Pole/30V
Contact Current Rating - 3 Amps
Wires: 0.25mm² PVC/PUR

ENTER DESCRIPTION
EC NO: WEU2012-0001
DRWN:RSCHIEBER 2011/06/22
CHKD:REISSNER 2011/07/13
APPR:CBURGER 2011/07/20
DESCRIPTION
REV B

QUALITY SYMBOLS
▼=0
Ⓒ=0

GENERAL TOLERANCES (UNLESS SPECIFIED)

	mm	INCH
4 PLACES	± ---	± ---
3 PLACES	± ---	± ---
2 PLACES	± ---	± .01
1 PLACE	± 0.3	± ---
ANGULAR ±1/2°		

DRAFT WHERE APPLICABLE MUST REMAIN WITHIN DIMENSIONS

DIMENSION STYLE: IN/MM
SCALE: 5:1
DESIGN UNITS: INCH
THIRD ANGLE PROJECTION

DRAWN BY: BWOODMAN DATE: 18/08/09
CHECKED BY: RSTONE DATE: 18/08/09
APPROVED BY: JFMURPHY DATE: 18/08/09

TITLE: CSE M8 XP MA STR PUR PVC UN

molex MOLEX INCORPORATED

MATERIAL NO.: SEE CHART
DOCUMENT NO.: SD-120027-002
SHEET NO.: 2 OF 2
SIZE: A2

THIS DRAWING CONTAINS INFORMATION THAT IS PROPRIETARY TO MOLEX INCORPORATED AND SHOULD NOT BE USED WITHOUT WRITTEN PERMISSION