DO NOT SCALE ALL DIMENSIONS ARE FOR REFERENCE ONLY

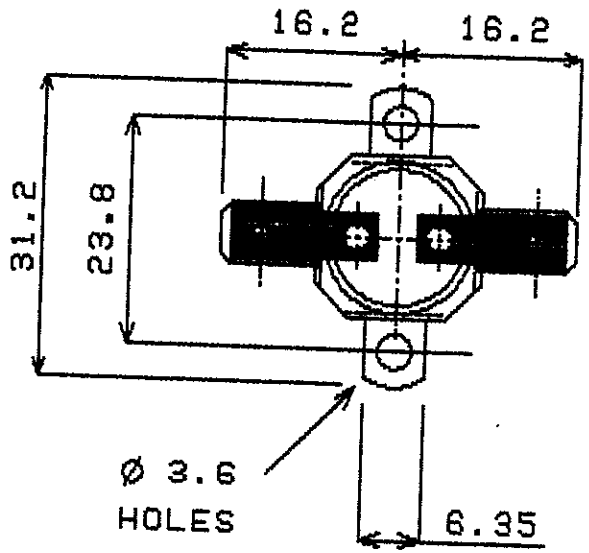

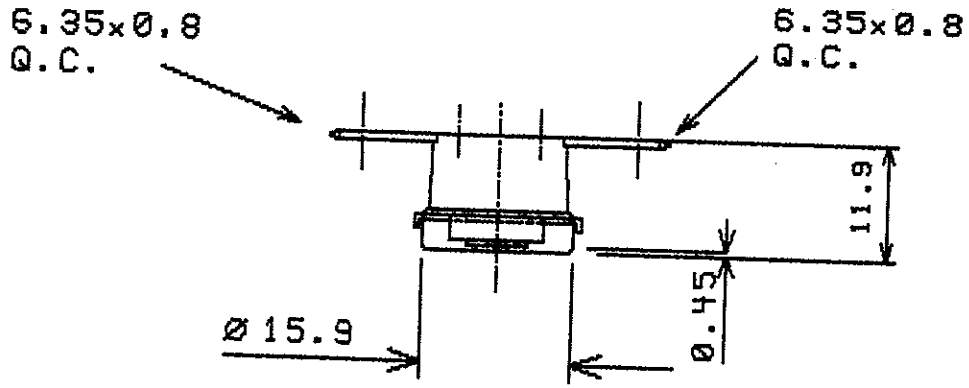

OPERATING CRITERIA

VOLTS; 240 AMPS; 10 HZ;

OPERATING TEMPS. DEG.C

OPEN; 70 ± 3
CLOSE; 55 ± 5

NOTE! ORIENTATION OF BRACKET IS NOT FIXED

ISSUE	A	B							
MOD No	3052	3250							
MTH/YR	3/97	7/98							

CODING REQUIREMENTS

COLOUR; LASER CODE
L70C [illegible] "35 XXX

CAP; B200 MAT'L; ALUMINIUM
BRK'T;B2036 MAT'L; STEEL
PLATING; NICKEL
TERMINAL; T146 ; T146
MATERIAL; BRASS

ELMWOOD DEVICE & UNIQUE PART No.
2455RP-9100-435

ELMWOOD DRG No.
965203

ISSUE
B

[redacted]

[illegible] ISSUE STAMP