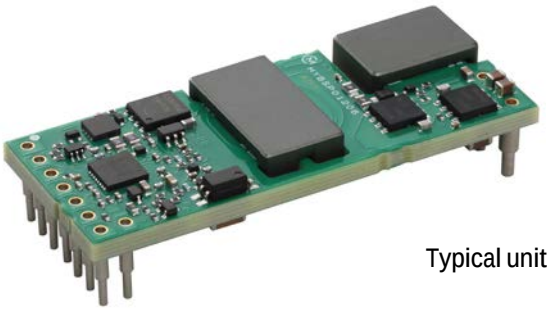

Typical unit

FEATURES

- Support IEEE802.3bt class8
- 72W DC-DC converter
- Support PSE Type Indicators
- Support Adapter ORing
- 41.1-57V Input Voltage range
- 22.2 x 56.4 x 8.6mm Size
- 93.2% efficiency (typical)
- 2250Vdc Input-Output Isolation
- Operating Temperature range -40 to +85 °C

PRODUCT OVERVIEW

The MYBSP01206AZFT is an isolated, regulated, DC-DC converter for PoE PD that has an input range of 41.1-57Vdc with a typical efficiency of 93.2%, and full 2250 Volt DC isolation.

The MYBSP01206AZFT is ideal for IEEE 802.3bt Compliant Devices. And the module has detection and classification for compliant IEEE802.3bt. MYBSP01206AZFT has PSE Type Indicator function and Adapter ORing function.

Module has self-protection features. These include input undervoltage lockout, output current limit, output overvoltage protection and overtemperature protection. The outputs current limit is using the hiccup autorestart technique.

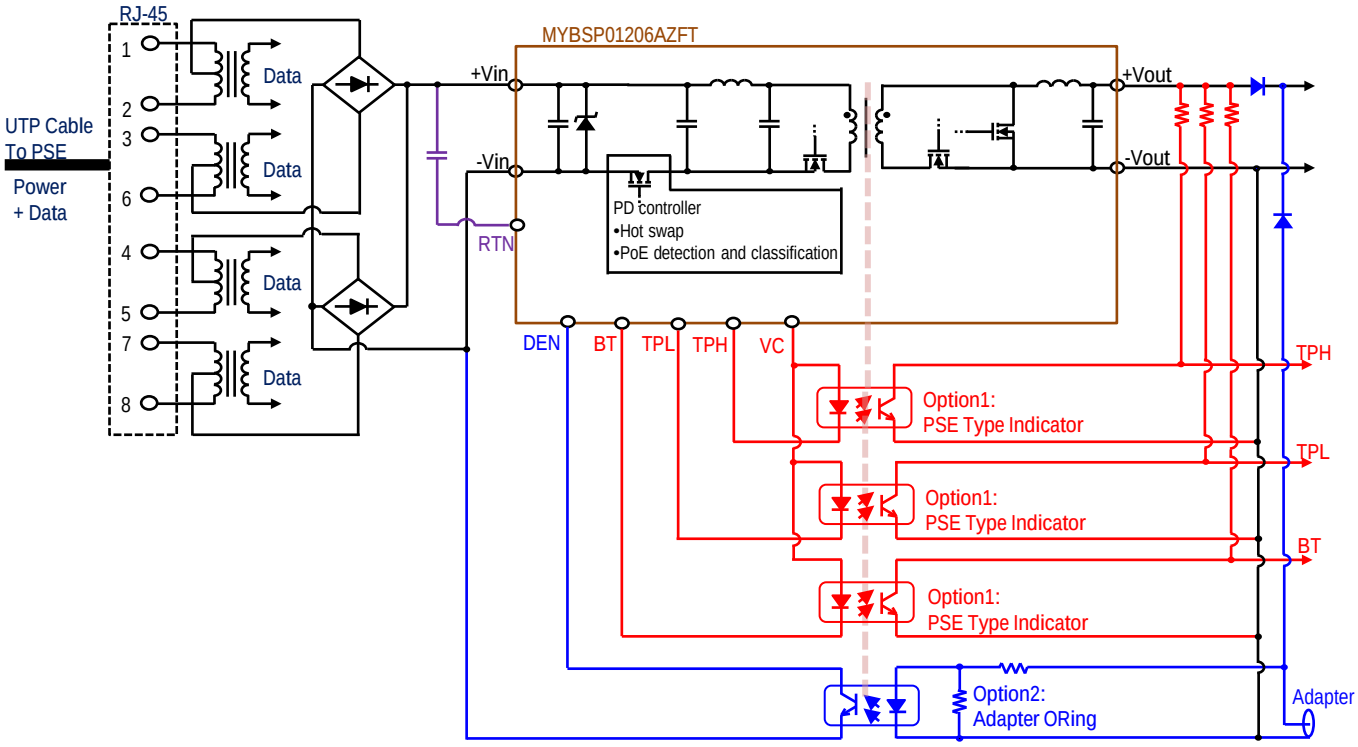

Figure 1. Simplified Block Diagram
Typical topology is shown.

PERFORMANCE SPECIFICATIONS SUMMARY AND ORDERING GUIDE

Model Number	Output						Input				Efficiency (%)		Package (mm)
	Vout (Vdc)	Iout (A,Max.)	Power (W)	R/N Typ. (mVp-p)	Regulation Typ.		Vin Nom. (Vdc)	Range (Vdc)	Iin, no load Typ.(mA)	Iin, full load Typ.(A)			
					Line (%)	Load (%)					Min.	Typ.	
MYBSP01206AZFT	12	6	72	100	±0.1	±0.1	48	41.1-57	54.0	1.61	91	93.2	22.2 x 56.4 x 8.6

1. Please refer to the Part Number Structure for additional ordering information and options.
2. All specifications are at nominal line voltage, full load, +25°C unless otherwise stated.

PART NUMBER STRUCTURE

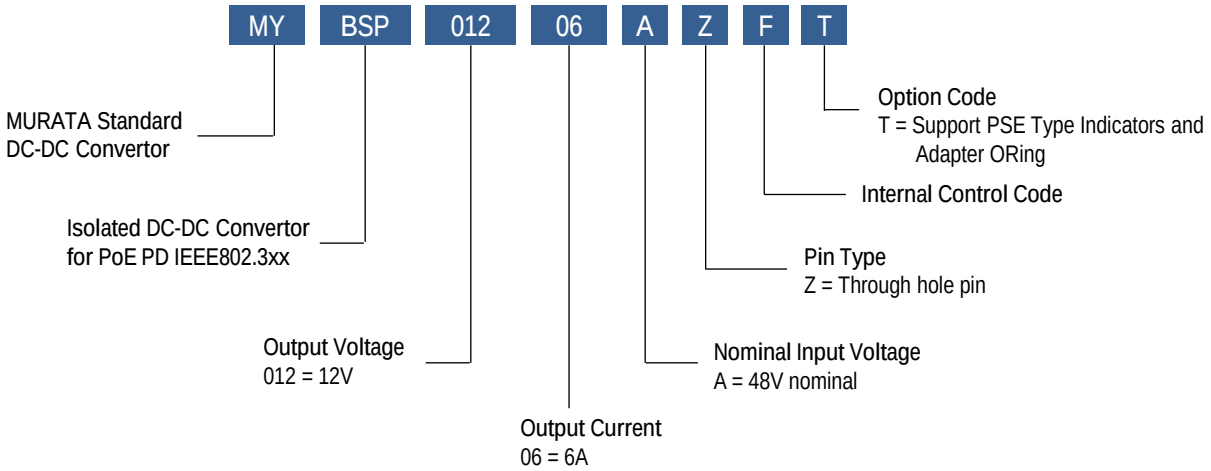

Product Marking

Layout
Top View

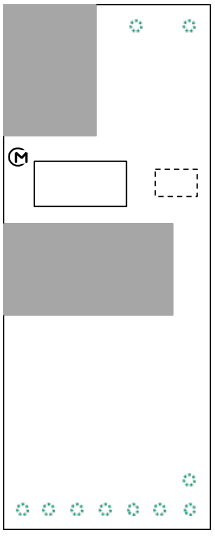

1Pin

Codes

- MFG ID
- Model Number
- Internal Manufacturing Code

FUNCTIONAL SPECIFICATIONS, MYBSP01206AZFT

ABSOLUTE MAXIMUM RATINGS	Conditions	Minimum	Typical / Nominal	Maximum	Units
Input Voltage, Continuous		0		57	Vdc
Input Voltage, Transient	100ms max. duration			60	Vdc
Isolation Voltage	Input to output, Leak current 1mA max for 1minute at +25°C/60%RH.			2250	Vdc
Output Power*1		0		72	W
Output Current		0		6	A
Storage Temperature Range	Vin = Zero (no power)	-40		90	°C
Absolute maximums are stress ratings. Exposure of devices to greater than any of these conditions may adversely affect long-term reliability. Proper operation under conditions other than those listed in the Performance/Functional Specifications Table is not implied or recommended.					
INPUT					
Operating Voltage Range		41.1	48	57	Vdc
Start-up threshold	Rising input voltage	36.1		40.2	Vdc
Undervoltage shutdown	Falling input voltage	30.3		33.8	Vdc
Internal Filter Type			Pi		
Input current					
Full Load Conditions	Vin = nom., Iout = max		1.61		A
Low Line Input current	Vin = min., Iout = 5.85A *1		1.85		A
No Load Current	Vin = nom., Iout = 0A.		54.0		mA
Current Limit Inception *1		1.9			A
On Resistance of Internal Hotswap			0.1		Ω
Resistance for detection	Vin=2.7 to 10.1V		24.9		kΩ
Classification current A	Vin=14.5 to 20.5V		39.9		mA
Classification current B	Same as above		27.9		mA
Maximum Capacitive Loading	Added between positive input (+ Vin) and RTN	0		100	µF
GENERAL and SAFETY					
Efficiency	Vin = 48V, full load	91	93.2		%
Isolation					
Isolation Voltage	Input to output, Leak current 1mA max for 1minute at +25°C/60%RH.	2250			Vdc
Insulation Safety Rating			Functional		
Isolation Capacitance			1500		pF
Calculated MTBF	Telcordia SR-332, issue 1, class 3, ground fixed, Ta = +25°C		1265		Hours x 10^3
DYNAMIC CHARACTERISTIC					
Fixed Switching Frequency			410		kHz
Vout Rise Time	From 10%-90% of Vout		1		ms
Dynamic Load Response	50-100-50% load step to 1% of Vout		400		µSec
Dynamic Load Peak Deviation	same as above		±150		mVdc

Specification Notes

*1 Input current overcurrent protection limits output power at low input voltage. Refer to the following graph for input voltage vs. output power.

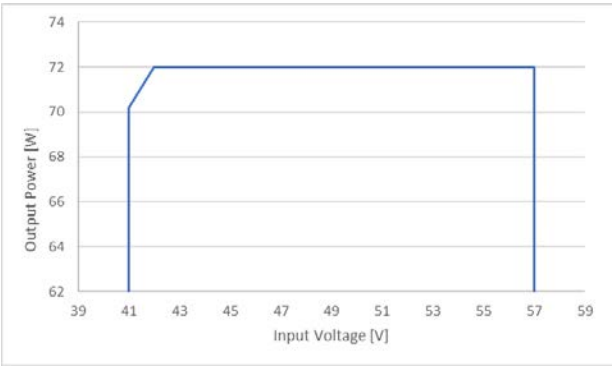

FUNCTIONAL SPECIFICATIONS, MYBSP01206AZFT(CONT.)

OUTPUT	Conditions	Minimum	Typical / Nominal	Maximum	Units
Total Output Power		0		72	W
Voltage					
Nominal Output Voltage	all conditions	11.64	12	12.36	Vdc
Overvoltage Protection		14.4			Vdc
Current					
Output Current Range *2		0		6	A
Current Limit Inception		6.18			A
Protection method	Hiccup current limiting		Non-latching		
Regulation					
Line Regulation	Vin=min. to max., Vout=nom., full load		±0.1		% of Vout
Load Regulation	Iout = min. to max.		±0.1		% of Vout
Ripple and Noise	150 MHz BW, Cout=10µF MLCC paralleled with 0.1µF		100		mV pk-pk
Temperature Coefficient	At all outputs		±0.02		% of Vout/°C
Maximum Capacitive Loading	Low ESR	0		200	µF
BT / TPL / TPH / VC / DEN					
BT / TPL / TPH					
Sinking Current	After classification, BT / TPL / TPH connect to VC		1.7		mA
VC					
Output Voltage	After start up		11	12.36	V
DEN					
Output Voltage	DEN=open			+Vin	V
Output Current	DEN connect to -Vin			5	mA
Disable Voltage	Falling			2.8	V
MECHANICAL					
Outline Dimensions	L x W x H		22.2 x 56.4 x 8.6		mm
Weight			20.8		Grams
Pin Diameter			1.02 & 1.57		mm
Pin Material			Copper alloy		
ENVIRONMENTAL					
Operating Ambient Temperature Range		-40		85	°C
Storage Temperature	Vin = Zero (no power)	-40		90	°C
Thermal Protection/Shutdown	Measured at hotspot		135		°C
Electromagnetic Interference Conducted, EN55032/CISPR32	External filter is required		A		Class
Electromagnetic Interference Radiated, EN55032/CISPR32	External filter is required		B		Class

Specification Notes

Unless otherwise noted, all specifications are typical at nominal input voltage, nominal output voltage and full load. General conditions are +25°C ambient temperature, near sea level altitude, natural convection airflow. All models are tested and specified with external parallel 10µF and 0.1µF output capacitors (See Technical Notes).

*2 Input current must be greater than or equal to 16mA if your application applies Maintain Power Signature(MPS) by IEEE802.3bt. Please check with your application.

PERFORMANCE DATA, MYBSP01206AZFT

Efficiency vs. Line Voltage and Load Current
(Ta=+25°C)

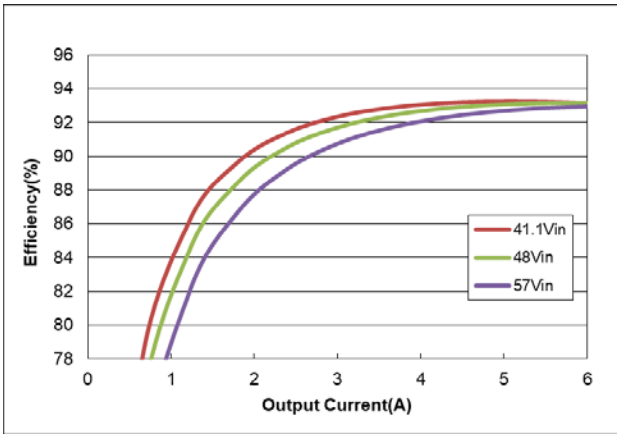

Load Regulation (Ta=+25°C)

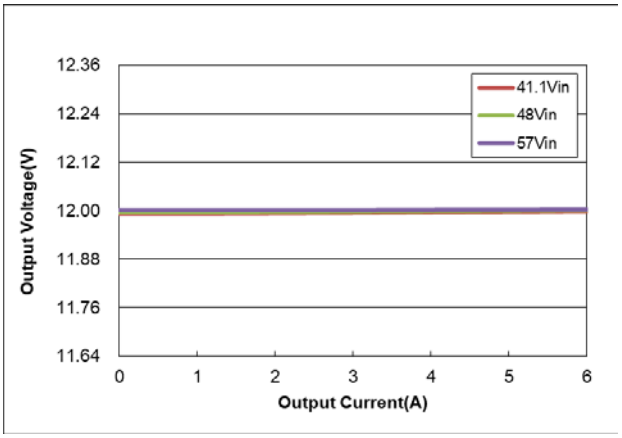

Vout Start-up
(Vin=48V, Iout=6A, Ta=+25°C)

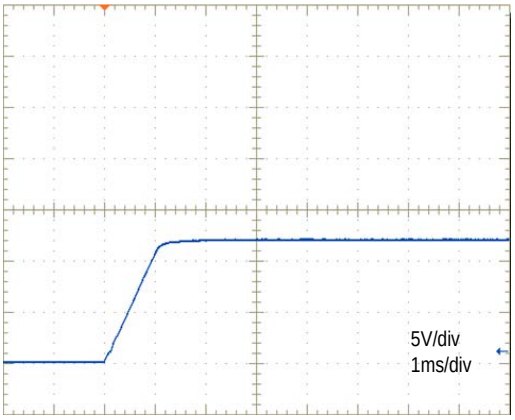

Output Ripple and Noise
(Vin=48V, Iout=6A, Ta=+25°C)

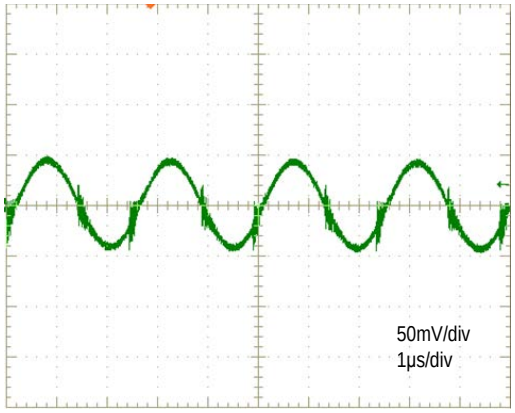

Transient Response (Vin=48V, Iout=3A to 6A, Ta=+25°C)
Ch1=Vout, 100mV/div, Ch4=Iout, 5A/div

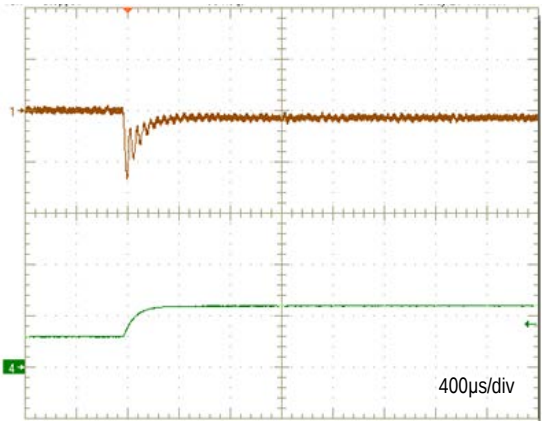

Transient Response (Vin=48V, Iout=6A to 3A, Ta=+25°C)
Ch1=Vout, 100mV/div, Ch4=Iout, 5A/div

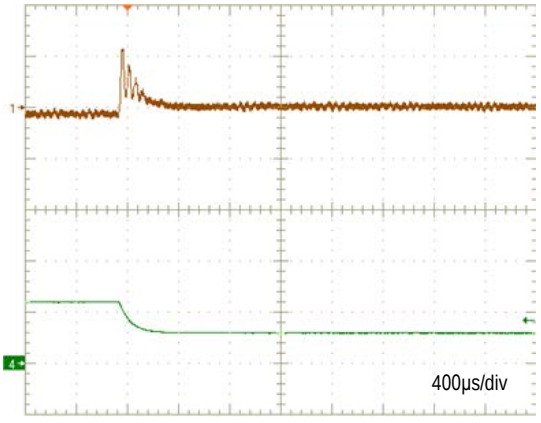

PERFORMANCE DATA, MYBSP01206AZFT(CONT.)

Conduction Noise (Vin=48V, Iout=6A, Ta=+25℃)
with External Input Filter

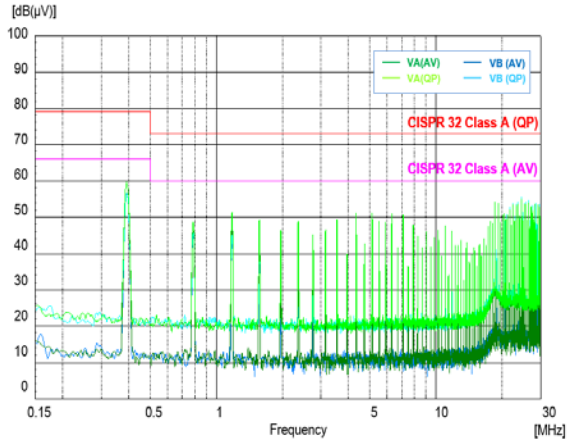

Radiation Noise (Vin=48V, Iout=6A, Ta=+25℃)
with External Input Filter

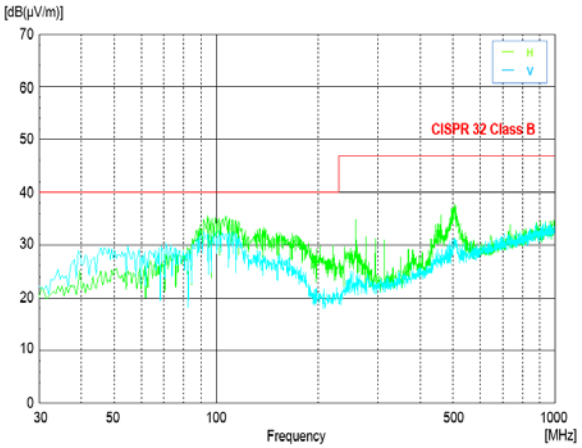

Thermal Derating
Unit under test (UUT) is covered by acrylic box to avoid airflow.
(Vin=48V, See Technical Notes)

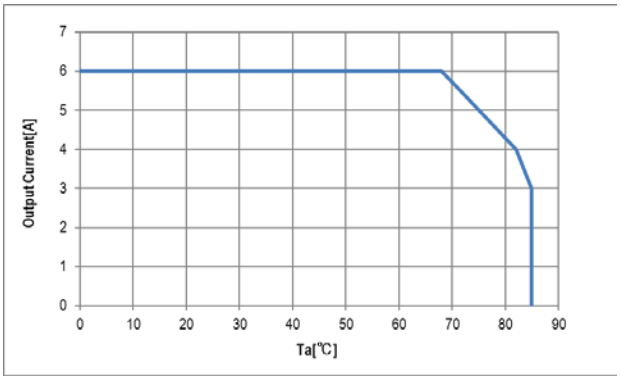

MECHANICAL SPECIFICATIONS

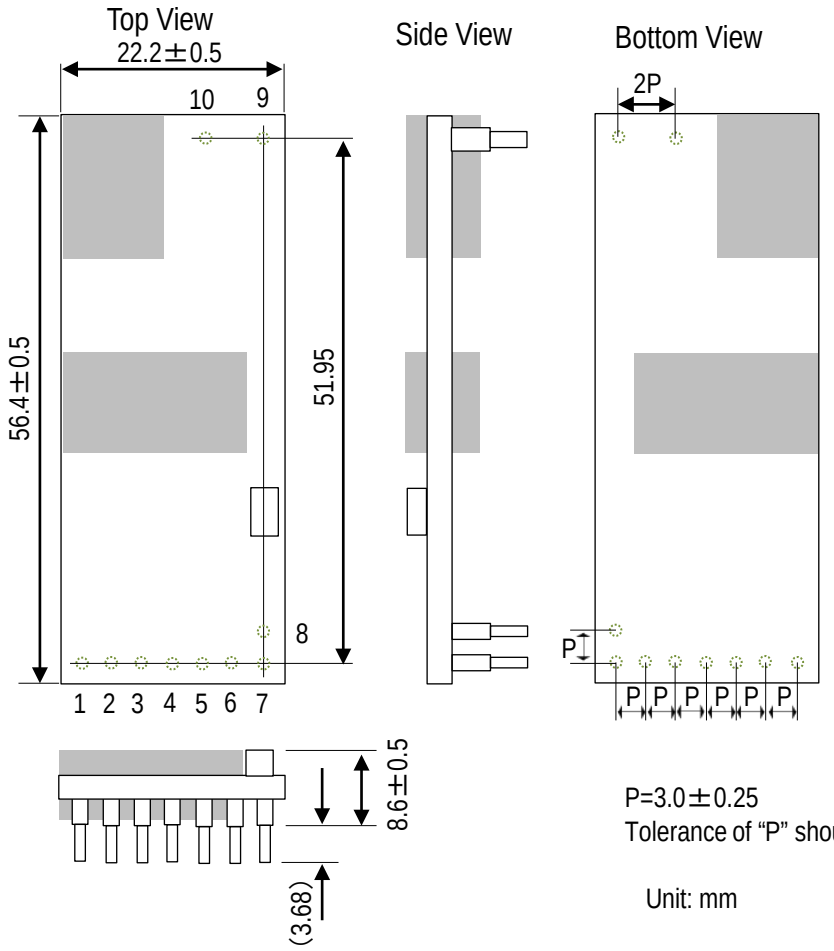

P=3.0±0.25
Tolerance of "P" should not be accumulated.

Unit: mm

■ Pin Assignment

INPUT / OUTPUT CONNECTIONS				
Pin	Designation	Function	Pin size	Pin shoulder size
1	+Vin	Positive Input Voltage	Φ1.02	Φ1.57
2	RTN	External Input Capacitor	Φ1.02	Φ1.57
3	VC	Controller Voltage	Φ1.02	Φ1.57
4	BT	PSE Type Indicator	Φ1.02	Φ1.57
5	TPL	PSE Type Indicator	Φ1.02	Φ1.57
6	TPH	PSE Type Indicator	Φ1.02	Φ1.57
7	-Vin	Negative Input Voltage	Φ1.02	Φ1.57
8	DEN	Detection and Enable	Φ1.02	Φ1.57
9	-Vout	Negative Output Voltage	Φ1.57	Φ2.36
10	+Vout	Positive Output Voltage	Φ1.57	Φ2.36

RECOMMENDED FOOTPRINT (TOP VIEW)

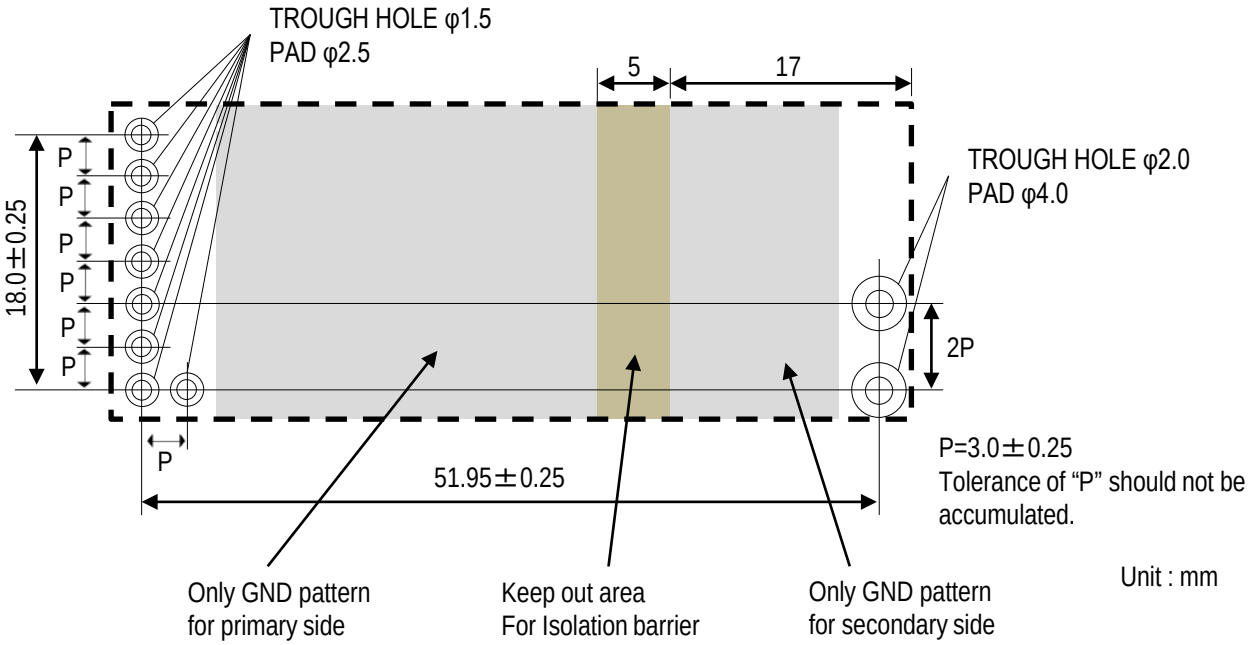

*Do not place parts in areas under the product.
Lay out high-impedance wiring such as signal lines as far away from the product as possible.

PACKAGING INFORMATION

Packaging form (Carton box)
1. The products are placed in the conductive mat (1 row × 8 column) as below
2. Pile these conductive mats and pack maximum 4 units in carton box.

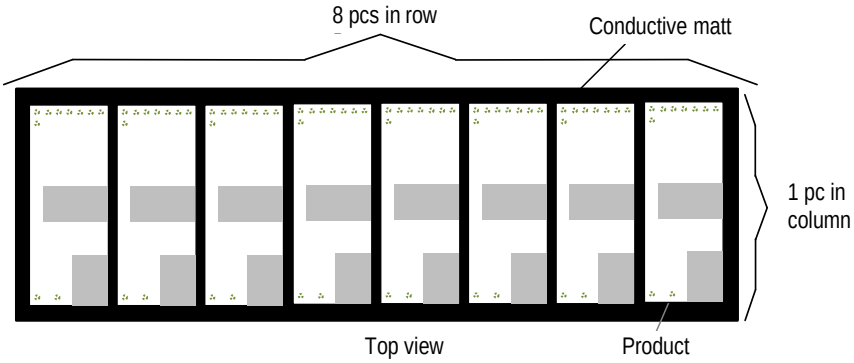

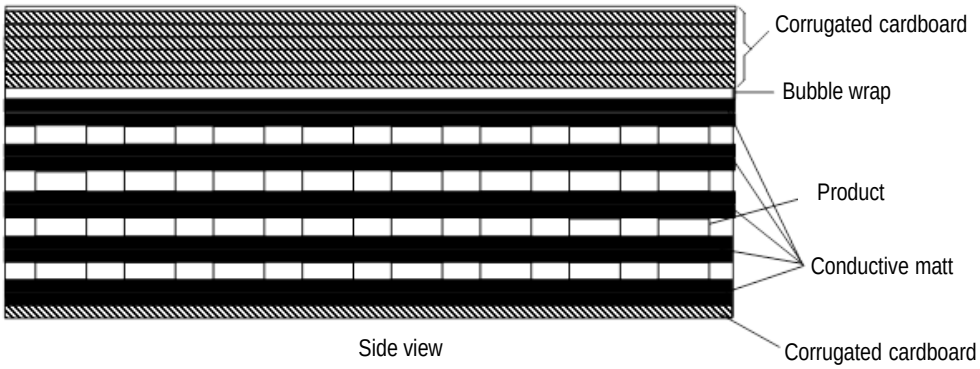

Item	Specification	Remark
Packaging form typical classification	Box	・The number of contained products may not reach to the maximum number.
Dimensions of packaging form 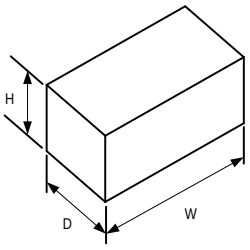	W = 245 (mm) D = 78 (mm) H = 104 (mm)	
The number of products in a packaging form	32 (pcs.)	

PACKAGING INFORMATION(CONT.)

Packaging form (Cardboard box)
4 carton boxes per cardboard box.

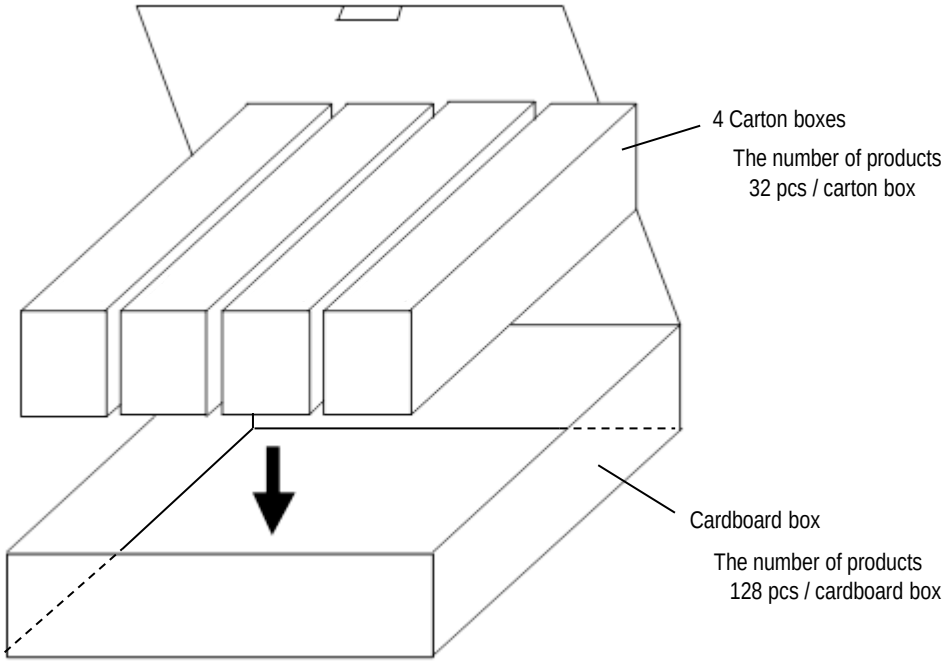

TECHNICAL NOTES

Over Current Protection

Over Current Protection operates with a controller circuit failure or over-load condition, and DC-DC converter will enter hiccup mode. After rejected the abnormal mode, DC-DC converter will automatically restart.

Over Voltage Protection

Output halts in hiccup mode while Output Voltage is over the value of OVP specified with failure of controller circuit.
DC-DC converter will enter a hiccup mode. After rejected the abnormal mode, DC-DC converter will automatically restart.

Over Temperature Protection

When DC-DC converter is heated abnormally, it will shut down. After it is cooled down, DC-DC converter will automatically restart.

External Input Capacitor

An external input capacitor can be added between positive input (+ Vin) and RTN to stabilize the operation of the DCDC converter. When EMI Suppression Filters are added, additional capacitors may be needed to stabilize the operation. The withstand voltage for the input voltage is required.
But do not connect any capacitor between positive input(+Vin) and negative input(-Vin) to avoid large inrush current. It is one of the requirements of IEEE802.3bt standard.

Test Circuit

The initial values in Functional Specification are measured in the following test circuit.

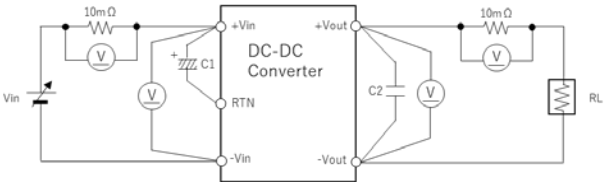

C1 : Low Impedance Electrolytic Capacitor : None
C2 : Ceramic Capacitor 0~200μF
RL : Electronic Load Device : LN-1000A-G7 KEISOKU GIKEN equivalent
Vin : DC Power Supply :Model HP6675A KEYSIGHT equivalent
Ⓥ : Digital Multimeter :Model HP34401A KEYSIGHT equivalent
When deviating from the above, DC-DC converter may operate abnormally. It should be fully confirmed on your board before use.

Ripple Noise Test

Output ripple noise is measured using designated external output components, circuits and layout as shown below.

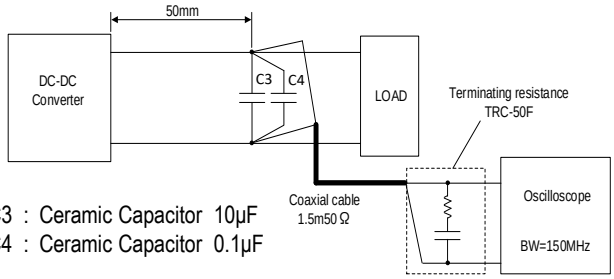

C3 : Ceramic Capacitor 10μF
C4 : Ceramic Capacitor 0.1μF

EMI Test

The external input filter is installed and the circuit diagram is shown below.

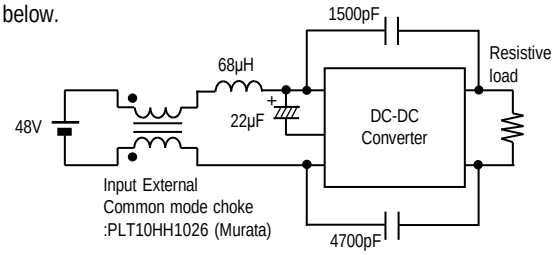

PSE Type Indicator

BT, TPL and TPH(Pin4~6) is open drain output. After classification with PSE Type 4, MYBSP01206AZFT pulls 3 Pins indicator low. Please pull up BT, TPL and TPH by VC(Pin3). VC is source only for this function. Do not apply VC for any other purpose. Appropriate board design for isolation barrier is required(Opto-coupler selection and Isolation distance). Also consider CTR of Opto-coupler which may affect value of R1~R3. Keep BT, TPL, TPH and VC open if you don't apply this function. Typical application circuit is below.

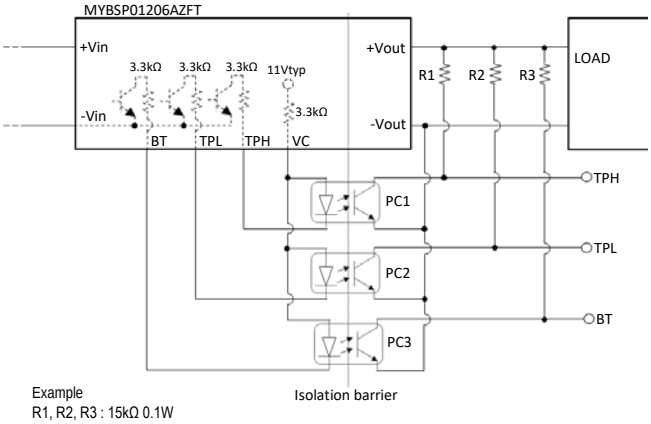

Example
R1, R2, R3 : 15kΩ 0.1W
PC1, PC2, PC3 : TLP293(GRH (TOSHIBA)

PSE Type	PD Class	Number of CLASS Cycles	TPH	TPL	BT
1-2	0-3	1	HIGH	HIGH	HIGH
2	4	2	HIGH	LOW	HIGH
3-4	0-3	1	HIGH	HIGH	LOW
3-4	4	2-3	HIGH	LOW	LOW
3-4	5-6	4	LOW	HIGH	LOW
4	7-8	5	LOW	LOW	LOW

Adapter ORing

DEN(Pin8) handles Enable / Disable of MYBSP01206AZFT. In case of applying external power output by adapter, MYBSP needs to be disable. Connecting DEN to –Vin disable MYBSP. There is limitation for voltage from adapter. Keep open if you don't use this function. Typical application circuit is below.

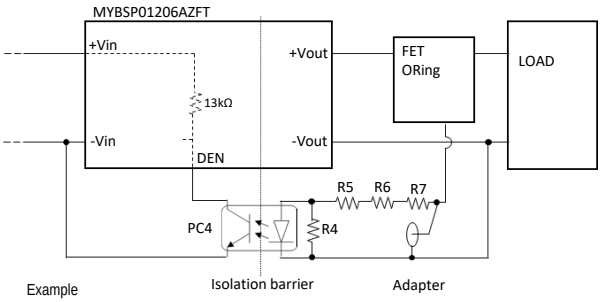

Example
R4 : 3.3kΩ 0.1W
R5, R6, R7 : 330Ω 0.25W
PC4 : TLP293(GRH (TOSHIBA)

Limitation for adapter voltage

P/N	Acceptable voltage range from Adapter at Vout
MYBSP01206AZFT	10.8 – 12.8V

Thermal Derating Condition

The output current is limited by the derating curve. The derating curve in this datasheet illustrate typical operation under a variety of conditions.

DC-DC Converter is tested on a 101.6x188mm, 2 layers Copper evaluation board at Vin=48V.
The Unit Under Test (UUT) is set up as shown below.
UUT is covered by acrylic box to avoid airflow.
The temperature measurement points are shown below table. The temperature of measurement points should not exceed the maximum temperatures in the below table.

Position	Description	Max temperature
P1	FET	T_{P1MAX} = 124°C
P2	FET	T_{P2MAX} = 124°C
P3	Opto-coupler	T_{P3MAX} = 105°C
P4	Transformer pattern	T_{P4MAX} = 125°C
P5	Transformer pattern	T_{P5MAX} = 125°C
P6	Snubber	T_{P6MAX} = 125°C

Top View

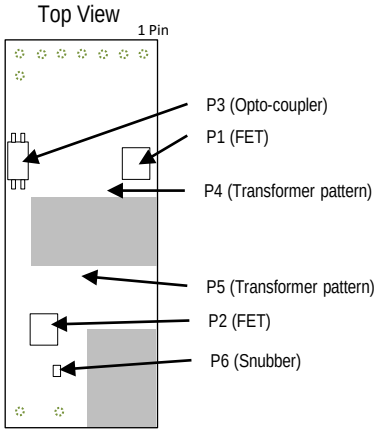

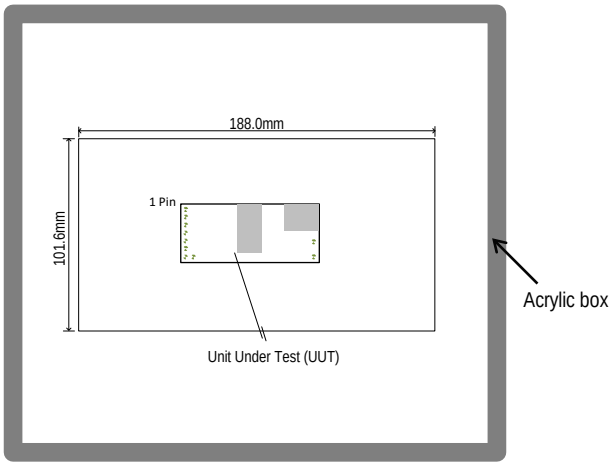

Detection and Hardware Classification

DC-DC converter implements IEEE 802.3bt compliant detection and hardware classification.
When DC-DC converter(PD) is connected to PSE, the PSE applies two voltages in the range of 2.7 V to 10.1 V and measures the corresponding current. Connection to PD is detected by measured current.(Detection)
After Detection, the PSE applies voltage in the range of 14.5 V to 20.5 V and measures the corresponding current. PD is classified by measured current.(Hardware Classification)
Please check with your application.

Through Hole Soldering Guidelines

Murata recommends the specifications below when installing these converters. These specifications vary depending on the solder type. Exceeding these specifications may cause damage to the product. Your production environment may differ; therefore please thoroughly review these guidelines with your process engineers.

Flux : Rosin Flux which contains chlorine 0.2wt% or less.
Do not use high activity acid flux and water soluble flux.

Solder : Use the solder Sn-3Ag-0.5Cu or the equivalent type.

Condition of Flow Soldering
Preheat : 120 ± 10 °C / 60 to 120 seconds
Soldering temperature : 260 °C +0/-5 °C
Soldering time : 10 seconds max.

Condition of Iron Soldering
Preheat : 120 ± 10 °C / 30 minutes max.
Soldering temperature : 350 °C max.
Soldering time : 3 seconds max.

Functional Specifications

Please contact Murata Sales before using this product for the applications listed below. These are applications that require very high reliability of prevention of defects which might directly cause damage to third party's life, body, or property.

1. Aircraft equipment
2. Aerospace equipment
3. Undersea equipment
4. Power plant control equipment
5. Medical equipment
6. Transportation equipment (cars, buses, trucks, trains, ships, etc.)
7. Traffic signal equipment
8. Disaster prevention /crime prevention equipment
9. Data-processing equipment
10. Application of similar complexity and /or reliability listed as above.

Storage

Please store this product in an environment where the temperature/humidity is stable in the range 0 to 40°C/10 to 75%RH and no direct sunlight. Use the product within 6 months after delivery.
Please avoid storage conditions where humidity and temperature change rapidly, as that may cause condensation on the product, which might degrade the quality of the product.
Please do not store the product environments that are dusty, in direct exposure to sea breeze, or in an atmosphere containing corrosive gas (Cl2, NH3, SO2, NOX and so on).

Operational environment and operational conditions

This product is not chemical-proof or rust-proof.
In order to prevent this product from leakage of electricity and/or abnormal temperature increase, do not use the product under the following circumstances:
(1) in an atmosphere containing corrosive gas (Cl2, NH3, SO2, NOX and so on).
(2) in a dusty place.
(3) in a place exposed to direct sunlight.
(4) in such a place where water splashes or in such a humid place where water condenses.
(5) in a place exposed to sea breeze.
(6) in any other places similar to the above (1)through (5).
Operational Conditions
Please use the product within specified values (power supply, temperature, input, output and load condition etc.). Input voltage drops for line impedance, so please make sure that input voltage is within in specified values.
If the product is used over the specified values, it may damage the product, reduce the quality, and even if the products can endure the condition for short time, it may cause degradation of the reliability.

Note Prior to use

If you apply high static electricity, voltage higher than rated voltage or reverse voltage to the product, it may cause defects in the products or degrade the reliability.
Please avoid the following items:
1. Over rating power supply, reverse power supply or not-enough connection of input voltage and 0V(DC)line
2. Electrostatic discharge by production line and/or operator
3. Electrified product by electrostatic induction

Do not subject product to excessive mechanical shock. If you drop the product on the floor it might cause a crack to the core of inductors and monolithic ceramic capacitors.
Also please pay attention to handling; the mounted parts can be dislodged if subjected to excessive force.

Transportation

If you transport the product, please pack it so that the package will not be damaged by mechanical vibration or mechanical shock, and please educate and guide the carrier to prevent rough handling.

Note

1. Please make sure that the product has been evaluated and confirmed against your specifications when it is mounted to your product.
2. All the items and parameters in this product specification have been prescribed on the premise that our product is used for the purpose, under the conditions and in the environment agreed upon between you and us. You are requested not to use our product deviating from such agreement.
3. We consider it not appropriate to include other terms and conditions for transaction warranty in product specifications, drawings or other technical documents. Therefore, if your technical documents as above include such terms and conditions as warranty clause, product liability clause, or intellectual property infringement liability clause, we will not be able to accept such terms and conditions unless they are based on the governmental regulation or they are stated in a separate contract agreement.

This product is subject to the following operating requirements and the Life and Safety Critical Application Sales Policy:
Refer to: https://power.murata.com/en/requirements

Murata Manufacturing Co., Ltd makes no representation that the use of its products in the circuits described herein, or the use of other technical information contained herein, will not infringe upon existing or future patent rights. The descriptions contained herein do not imply the granting of licenses to make, use, or sell equipment constructed in accordance therewith. Spec and cautions are subject to change without notice.
© 2018 Murata Manufacturing Co., Ltd