2.495V Programmable Shunt Voltage Reference

GENERAL DESCRIPTION

TS431 series integrated circuits are three-terminal programmable shunt regulator diodes. These monolithic IC voltage references operate as a low temperature coefficient zener which is programmable from V_{REF} to 36 volts with two external resistors. These devices exhibit a wide operating current range of 0.3 to 100mA with a typical dynamic impedance of 0.22Ω.

The characteristics of these references make them excellent replacements for zener diodes in many applications such as digital voltmeters, power supplies, and op amp circuitry. The 2.495V reference makes it convenient to obtain a stable reference from 5.0V logic supplies, and since The TS431 series operates as a shunt regulator, it can be used as either a positive or negative stage reference.

FEATURES

- Precision Reference Voltage
  TS431A – 2.495V ±1%
  TS431B – 2.495V ±0.5%
- Equivalent Full Range Temp. Coefficient: 50ppm/°C
- Programmable Output Voltage up to 36V
- Fast Turn-On Response
- Sink Current Capability of 1~100mA
- Low Dynamic Output Impedance: 0.2Ω
- Low Output Noise
- RoHS Compliant
- Halogen-free according to IEC 61249-2-21

APPLICATION

- SMPS
- Lighting
- Telecommunication
- Home appliance

Pb-Free RoHS COMPLIANT HALOGEN FREE

SOT-23

Pin Definition:
1. Reference
2. Cathode
3. Anode

SOP-8

Pin Definition

1. Cathode	5. N/C
2. Anode	6. Anode
3. Anode	7. Anode
4. N/C	8. Reference

Notes: MSL 3 (Moisture Sensitivity Level) per J-STD-020

TYPICAL APPLICATIN CIRCUIT

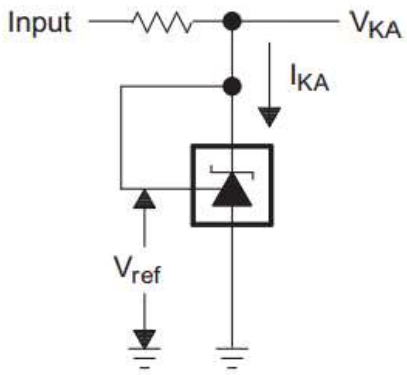

ABSOLUTE MAXIMUM RATINGS

PARAMETER		SYMBOL	LIMIT	UNIT
Cathode Voltage (Note)		V_{KA}	37	V
Continuous Cathode Current Range		I_K	-100 ~ +150	mA
Reference Input Current Range		I_{REF}	-0.05 ~ +10	mA
Power Dissipation	SOT-23	P_D	0.30	W
	SOP-8		0.50	
Junction Temperature		T_J	+150	°C
Operating Temperature Range		T_{OPER}	-40 ~ +85	°C
Storage Temperature Range		T_{STG}	-65 ~ +150	°C

RECOMMEND OPERATING CONDITION

PARAMETER	SYMBOL	LIMIT	UNIT
Cathode Voltage	V_{KA}	V_{REF} ~ 36	V
Continuous Cathode Current Range	I_K	1 ~ 100	mA

ELECTRICAL CHARACTERISTICS

PARAMETER	CONDITIONS	SYMBOL	MIN	TYP	MAX	UNIT
Reference voltage	TS431A	V_{REF}	2.470	2.495	2.520	V
	TS431B		2.483		2.507	
Deviation of reference input voltage	$V_{KA} = V_{REF}$, I_K =10mA T_A= full range	ΔV_{REF}	--	8	17	mV
Radio of change in Vref to change in cathode Voltage	I_{KA} =10mA, ΔV_{KA} = 10V to V_{REF}	ΔV_{REF} /ΔV_{KA}	--	-1.4	-2.7	mV/V
	ΔV_{KA} = 36V to 10V		--	-1	-2	
Reference Input current	R1=10kΩ, R2=∞,	I_{REF}	--	0.7	4	μA
Deviation of reference input current, over temp.	R1=10kΩ, R2=∞, I_{KA} =10mA T_A= full range	ΔI_{REF}	--	0.4	1.2	μA
Off-state Cathode Current	V_{REF} =0V	I_{KA} (off)	--	--	1	μA
Minimum operating cathode current	$V_{KA} = V_{REF}$	$I_{KA(min)}$	--	0.4	0.6	mA
Dynamic Output Impedance	f<1kHz, $V_{KA} = V_{REF}$ I_{KA} =1mA to 100mA	$\lvert Z_{KA} \rvert$	--	0.22	0.5	Ω

Note: Voltage values are with respect to the anode terminal unless otherwise noted.

ORDERING INFORMATION

PART NO.	PACKAGE	PACKING
TS431ACX RFG	SOT-23	3,000pcs / 7” Reel
TS431BCX RFG	SOT-23	3,000pcs / 7” Reel
TS431ACS RLG	SOP-8	2,500pcs / 13” Reel
TS431BCS RLG	SOP-8	2,500pcs / 13” Reel

BLOCK DIAGRAM

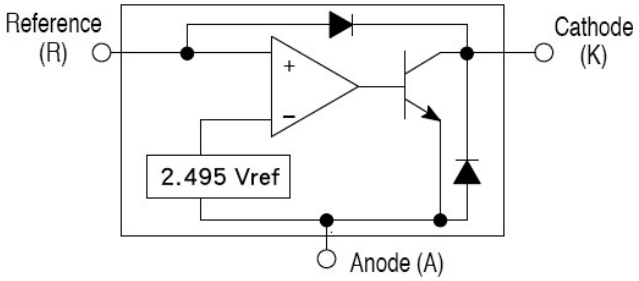

* The deviation parameters ΔV_{REF} and ΔI_{REF} are defined as difference between the maximum value and minimum value obtained over the full operating ambient temperature range that applied.

* The average temperature coefficient of the reference input voltage, αV_{REF} is defined as:

$$\alpha V_{ref}\left(\frac{ppm}{°C}\right) = \frac{\left(\frac{(\Delta V_{ref})}{V_{ref}\ (T_A = 25°C)} \times 10^6\right)}{\Delta T_A}$$

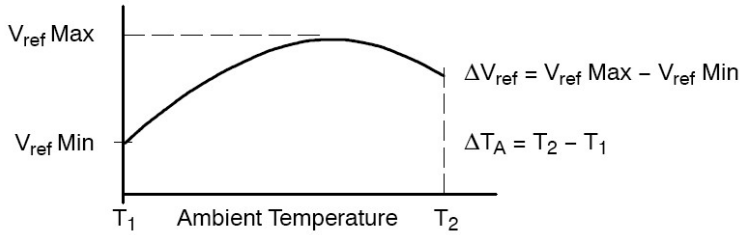

Where: **T2-T1** = full temperature change.

αV_{REF} can be positive or negative depending on whether the slope is positive or negative.

Example: Maximum V_{REF}=2.496V at 30°C, minimum V_{REF} =2.492V at 0°C, V_{REF} =2.495V at 25°C, ΔT=70°C

αV_{REF} | = [4mV / 2495mV] * 10^6 / 70°C ≈ 23ppm/°C

Because minimum V_{REF} occurs at the lower temperature, the coefficient is positive.

* The dynamic impedance ZKA is defined as:

| Z_{KA} | = ΔV_{KA} / ΔI_{KA}

* When the device operating with two external resistors, R1 and R2, (refer to Figure 2) the total dynamic impedance of the circuit is given by:

| Z_{KA} | = Δv / Δi | ≈ Z_{KA} | * (1 + R1 / R2)

ADDITIONAL INFORMATION – STABILITY

When TS431A/431B is used as a shunt regulator, there are two options for selection of C_L, are recommended for optional stability:

A) No load capacitance across the device, decouple at the load.

B) Large capacitance across the device, optional decoupling at the load.

The reason for this is that TS431A/431B exhibits instability with capacitances in the range of 10nF to 1μF (approx.) at light cathode current up to 3mA (typ). The device is less stable the lower the cathode voltage has been set for. Therefore while the device will be perfectly stable operating at a cathode current of 10mA (approx.) with a 0.1μF capacitor across it, it will oscillate transiently during start up as the cathode current passes through the instability region. Select a very low capacitance, or alternatively a high capacitance (10μF) will avoid this issue altogether. Since the user will probably wish to have local decoupling at the load anyway, the most cost-effective method is to use no capacitance at all directly across the device. PCB trace/via resistance and inductance prevent the local load decoupling from causing the oscillation during the transient startup phase.

Note: if the TS431A/431B is located right at the load, so the load decoupling capacitor is directly across it, then this capacitor will have to be ≤1nF or ≥10μF.

APPLICATIONS EXAMPLES

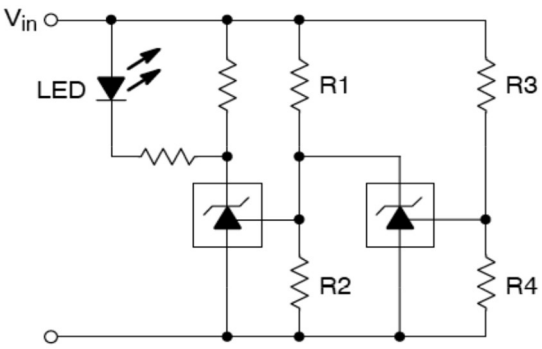

L.E.D. indicator is 'ON' when V_{in} is between the upper and lower limits,

$$\text{Lower limit} = \left(1 + \frac{R1}{R2}\right) V_{ref}$$

$$\text{Upper limit} = \left(1 + \frac{R3}{R4}\right) V_{ref}$$

Figure 1. Voltage Monitor

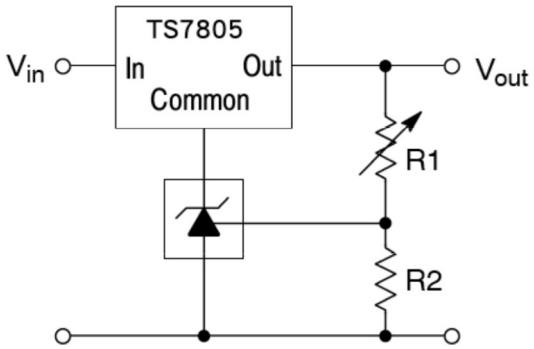

$$V_{out} = \left(1 + \frac{R1}{R2}\right) V_{ref}$$

$$V_{out(min)} = V_{ref} + 5.0\ V$$

Figure 2. Output Control for Three Terminal Fixed Regulator

APPLICATIONS EXAMPLES (CONTINUE)

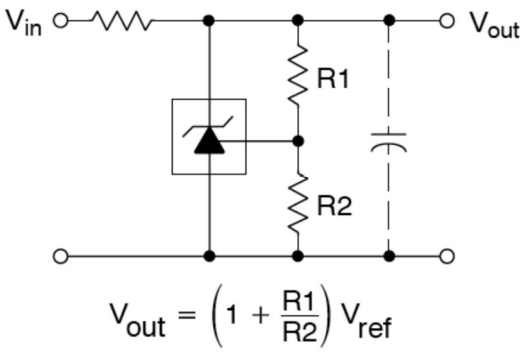

Figure 3. Shunt Regulator

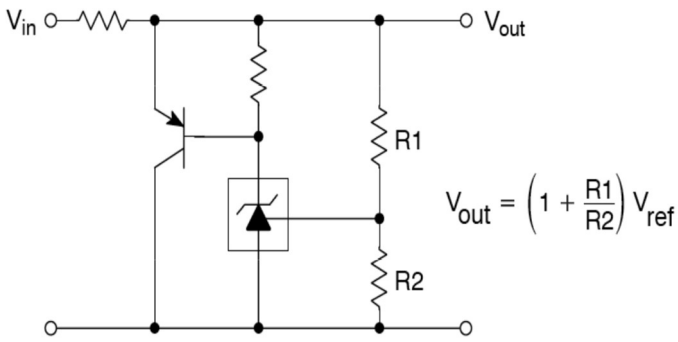

Figure 4. High Current Shunt Regulator

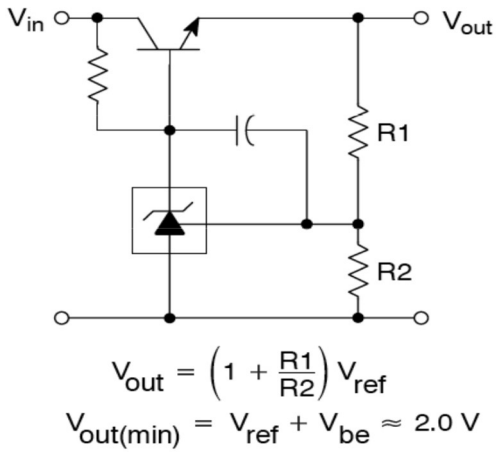

Figure 5. Series Pass Regulator

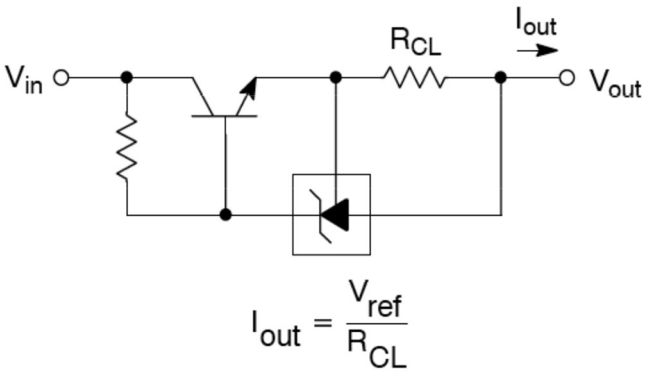

Figure 6. Constant Current Source

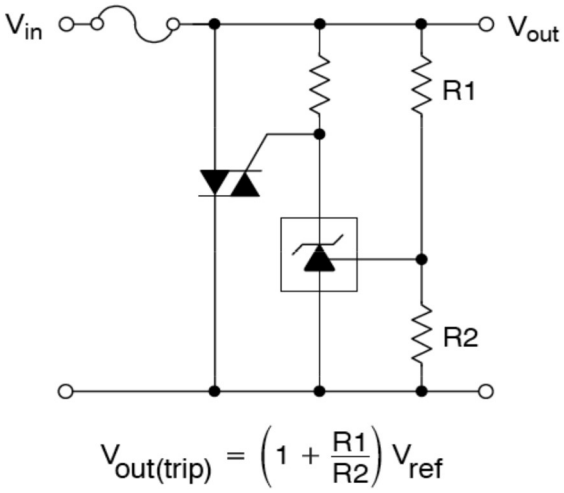

Figure 7. TRIAC Crowbar

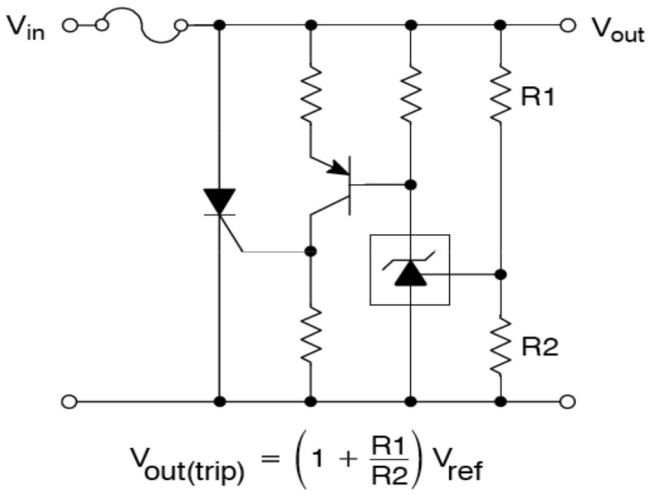

Figure 8. SCR Crowbar

APPLICATIONS EXAMPLES (CONTINUE)

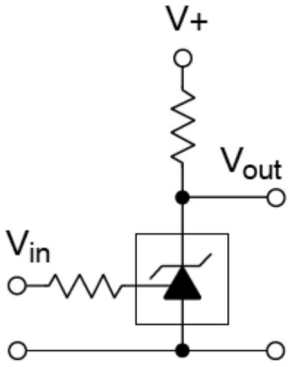

Vin	Vout
<Vref	V+
>Vref	≈0.74V

Figure 9. Single-Supply Comparator with Temperature-Compensated Threshold

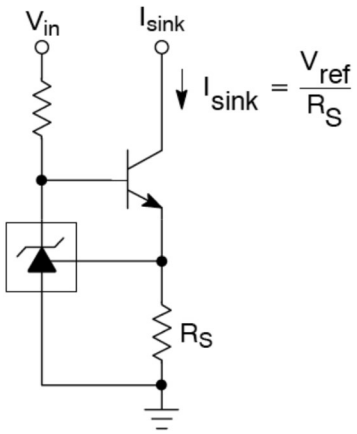

Figure 10. Constant Current Sink

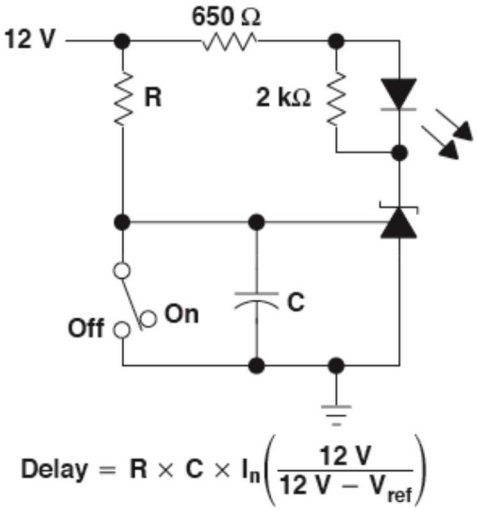

Figure 11. Delay Timer

TYPICAL PERFORMANCE CHARACTERISTICS

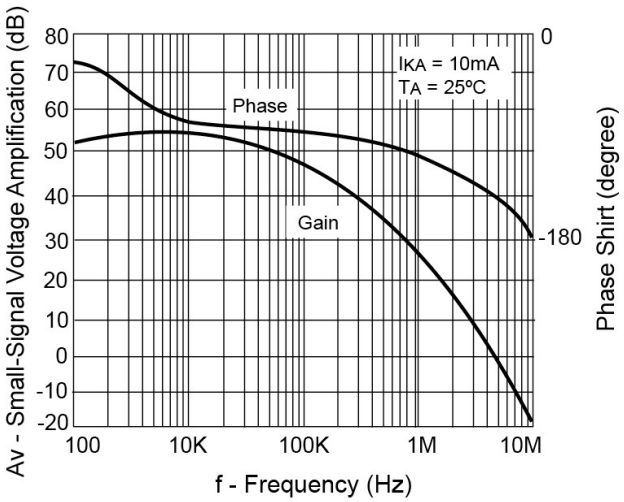

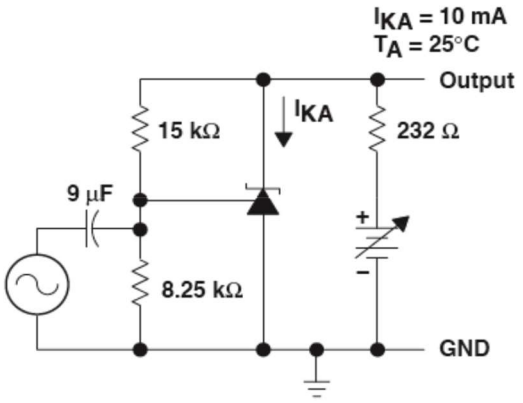

Test Circuit for Voltage Amplification

Figure 12. Small-Signal Voltage Gain and Phase Shirt vs. Frequency

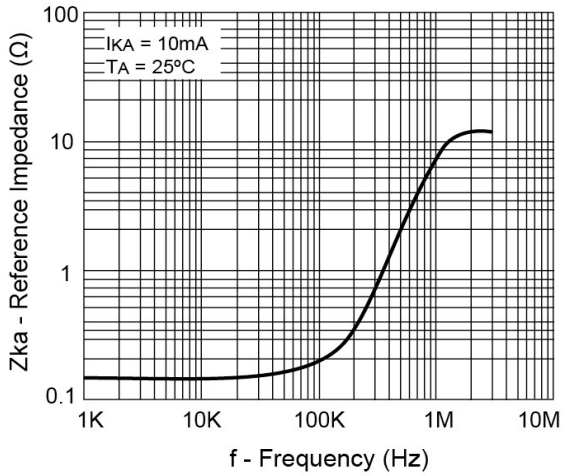

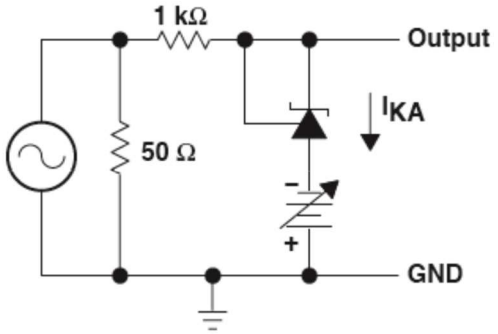

Test Circuit for Reference Impedance

Figure 13. Reference Impedance vs. Frequency

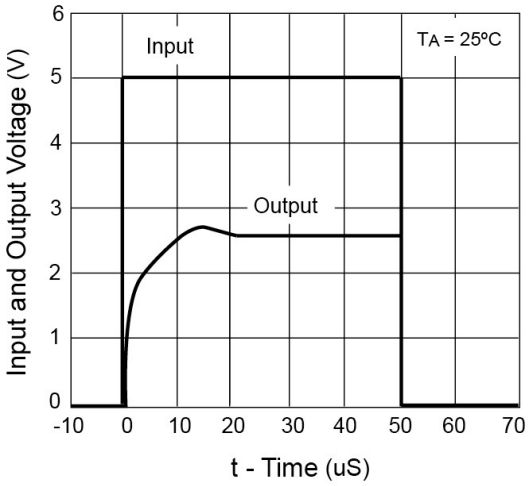

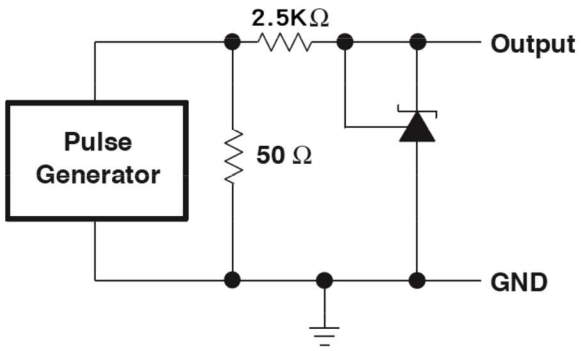

Test Circuit for Pulse Response, Ik=1mA

Figure 14. Pulse Response

TYPICAL PERFORMANCE CHARACTERISTICS (CONTINUE)

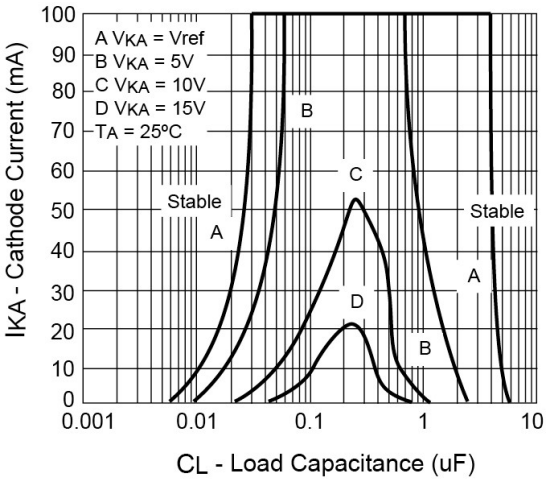

The areas under the curves represent conditions that may cause the device to oscillate. For curves B, C, and D, R2 and V+ were adjusted to establish the initial V_{KA} and I_{KA} conditions with C_L=0. V_{BATT} and C_L then were adjusted to determine the ranges of stability.

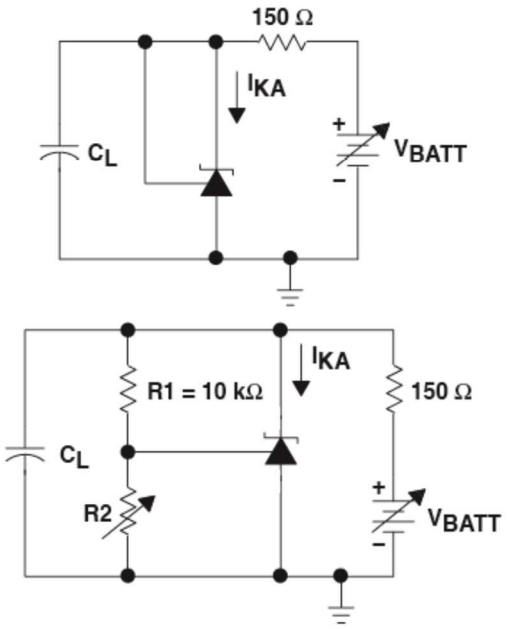

Test Circuit for Curve B, C and D

Figure 15. Reference Impedance vs. Frequency

CHARACTERISTICS CURVES

(T_C = 25°C unless otherwise noted)

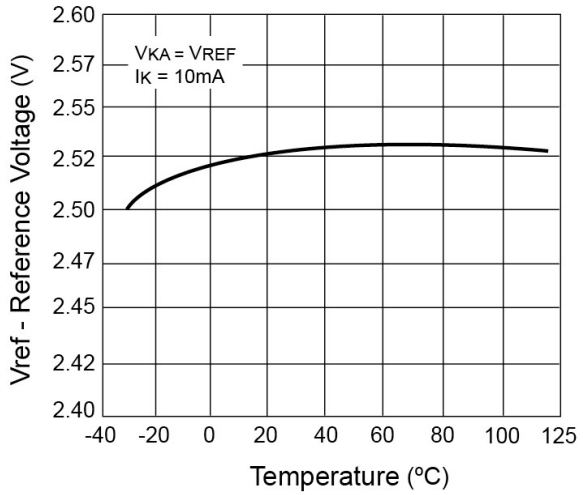

Figure 16. Reference Voltage vs. Temperature

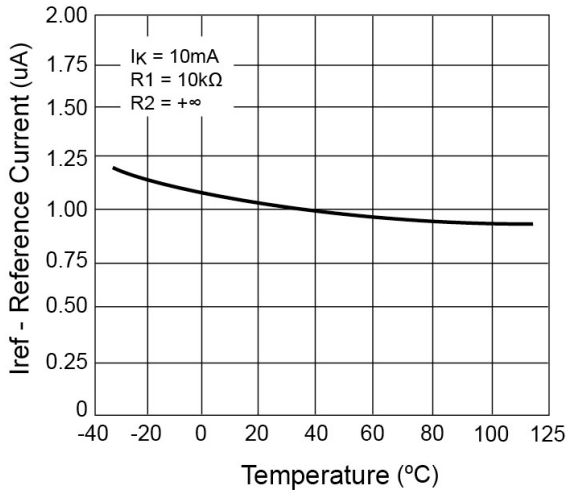

Figure 17. Reference Current vs. Temperature

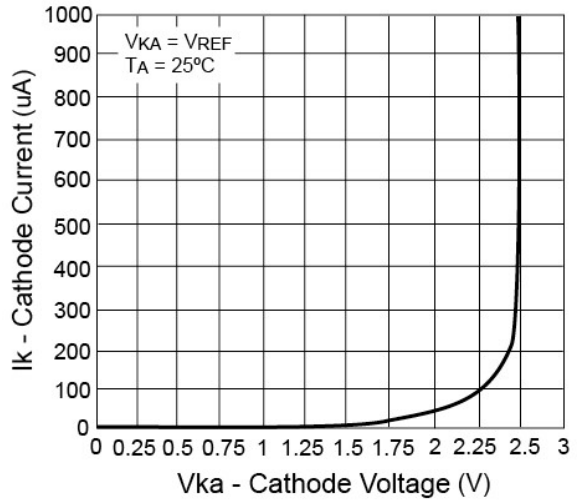

Figure 18. Cathode Current vs. Cathode Voltage

PACKAGE OUTLINE DIMENSIONS (Unit: Millimeters)

SOT-23

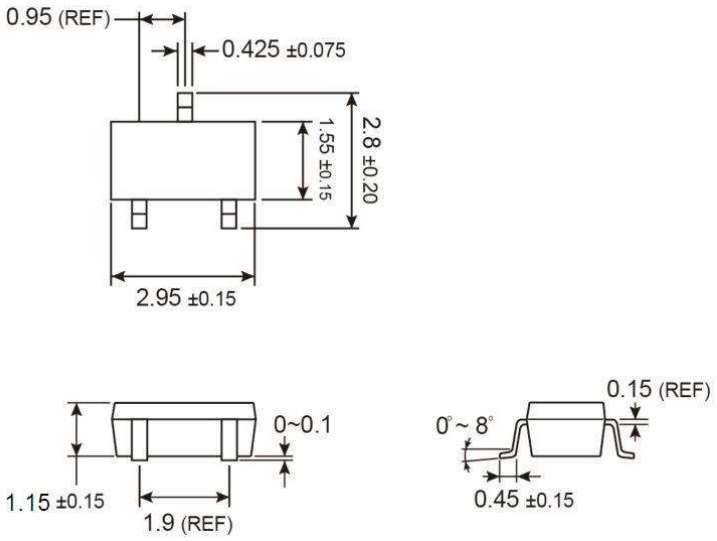

SUGGESTED PAD LAYOUT (Unit: Millimeters)

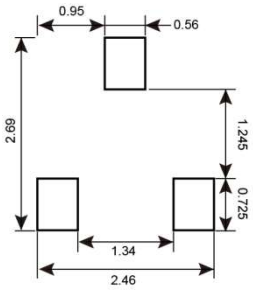

MARKING DIAGRAM

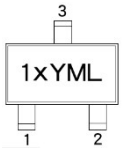

1 = Device Code
X = Tolerance Code
(**A** = ±1%, **B** = ±0.5%)
Y = Year Code
M = Month Code for Halogen Free Product

O =Jan	**P** =Feb	**Q** =Mar	**R** =Apr
S =May	**T** =Jun	**U** =Jul	**V** =Aug
W =Sep	**X** =Oct	**Y** =Nov	**Z** =Dec

L = Lot Code

PACKAGE OUTLINE DIMENSIONS (Unit: Millimeters)

SOP-8

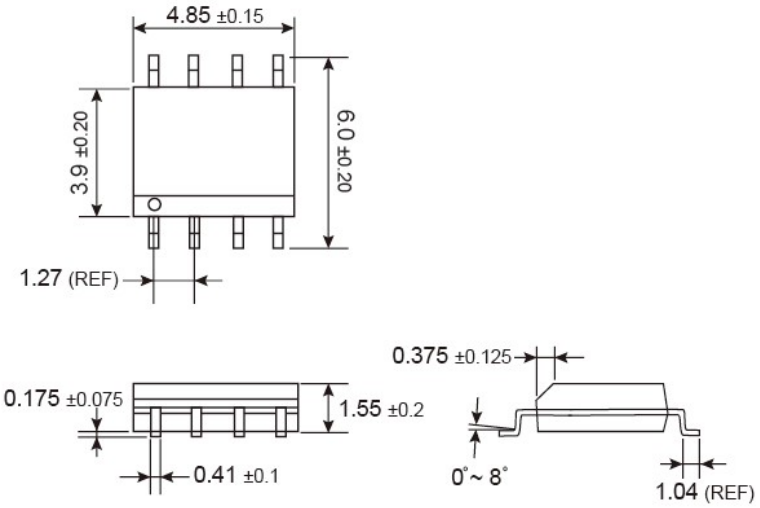

SUGGESTED PAD LAYOUT (Unit: Millimeters)

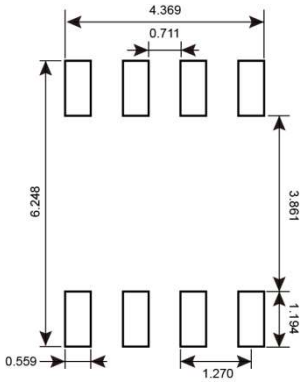

MARKING DIAGRAM

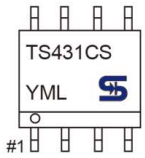

Y = Year Code
M = Month Code for Halogen Free Product

O =Jan	**P** =Feb	**Q** =Mar	**R** =Apr
S =May	**T** =Jun	**U** =Jul	**V** =Aug
W =Sep	**X** =Oct	**Y** =Nov	**Z** =Dec

L = Lot Code

Notice

Specifications of the products displayed herein are subject to change without notice. TSC or anyone on its behalf, assumes no responsibility or liability for any errors or inaccuracies.

Purchasers are solely responsible for the choice, selection, and use of TSC products and TSC assumes no liability for application assistance or the design of Purchasers' products.

Information contained herein is intended to provide a product description only. No license, express or implied, to any intellectual property rights is granted by this document. Except as provided in TSC's terms and conditions of sale for such products, TSC assumes no liability whatsoever, and disclaims any express or implied warranty, relating to sale and/or use of TSC products including liability or warranties relating to fitness for a particular purpose, merchantability, or infringement of any patent, copyright, or other intellectual property right.

The products shown herein are not designed for use in medical, life-saving, or life-sustaining applications. Customers using or selling these products for use in such applications do so at their own risk and agree to fully indemnify TSC for any damages resulting from such improper use or sale.