Für diese Unterlage behalten wir uns alle Rechte vor, auch für den Fall der Patenterteilung oder Gebrauchsmustereintragung. Sie darf ohne unsere vorherige schriftliche Zustimmung weder vervielfältigt noch sonstwie benutzt, noch Dritten zugänglich gemacht werden.

Nur rot gestempelte oder auf Laufkarte gedruckte Dokumente unterliegen dem Änderungsdienst und sind zur Fertigung freigegeben.
Only red stamped or on jobcard printed documents are managed. These documents are approved for production.

All Rights reserved, including possible patents or trademarks. Documents shall not be provided to a third party or duplicated in any form without prior written permission.

Additional coding
View in direction B

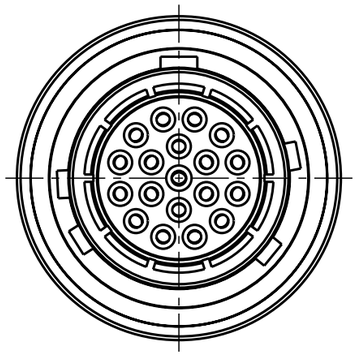

K12YBR-P19WFG0-0000
Mechanical coding: B
Color coding: red

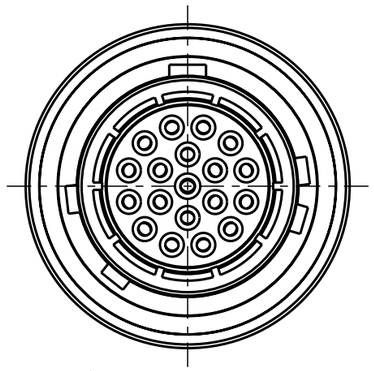

K12YAR-P19WFG0-0000
Mechanical coding: A
Color coding: light brown

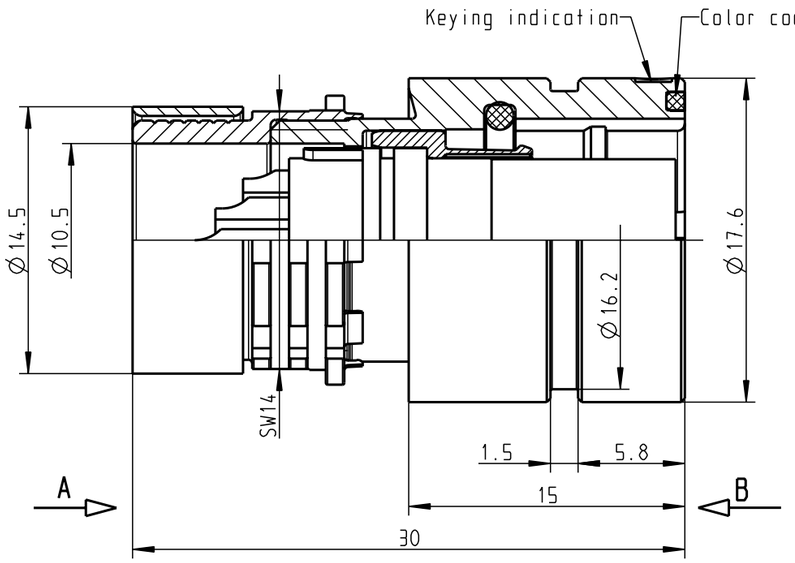

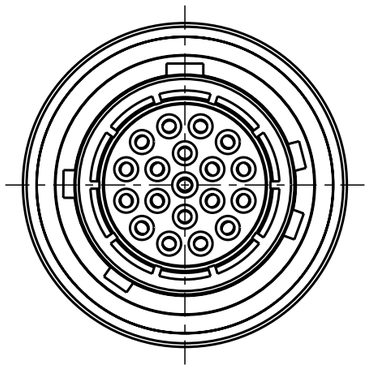

K12YCR-P19WFG0-0000
Mechanical coding: C
Color coding: blue

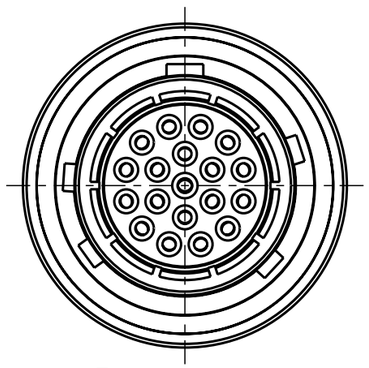

K12YDR-P19WFG0-0000
Mechanical coding: D
Color coding: green

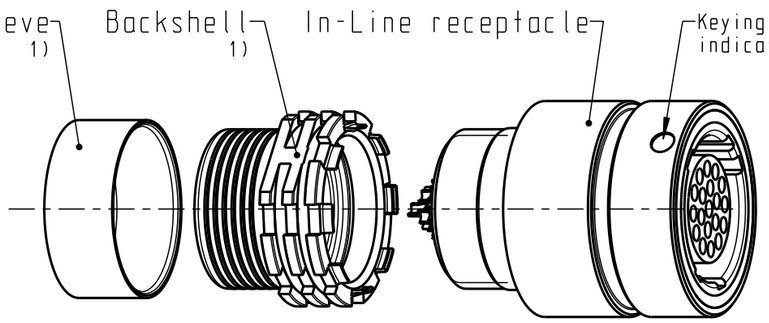

Delivery condition
2:1

Technical information

- Max. cable Ø10.0mm (Based on cable with one braided shield)
- Solder contacts: AWG22
- Current load: 7A@Δt40° (Single contact)
  3,15A@Δt40° (Insert)
- Test voltage: 1000V (acc. SAE AS 13441:1998, Contact to contact)
- Rated voltage: 333V (acc. SAE AS 13441:1998) 2)

- For more technical information and accessories see catalogue (www.odu.de/amc)

1) For crimp information, torque, etc. see assembly instruction 010.645.001.000.003 (www.odu.de/amc/assembly)

2) Maximal operating voltage at sea level up to 2.000m. Rated voltage applies no other electrical safety standard. In case other standards rule a specific use of the connector, the application specific safety criteria shall be considered first. This must be evaluated in the frame of equipment engineering.

All shown connectors are according to DIN EN 61984:2009
connectors without breaking capacity (COC)!

Only insert
View in direction A
6:1

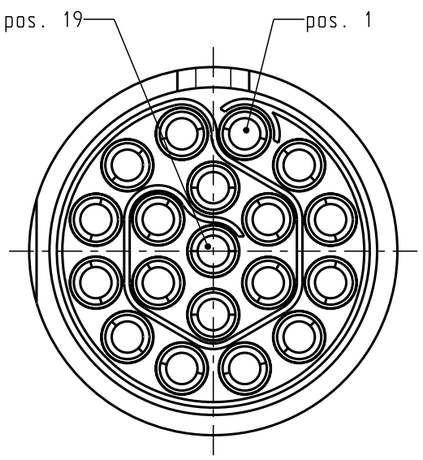

index	notice	date	name

General tolerances to DIN ISO 2768-mK
Toleration to DIN ISO 8015

	date	name
2014		
prep.	30.01.	M. Meier
app.		
norm.		

ODU A perfect alliance.

PE-modell-nr.:

CAD-nr.: 00056549

sheet.:

designation: In-Line Receptacle
AMC Standard Version

scale: 3:1

drawing nr.: K12Y.R-P19WFG0-0000

copy nr.

replacement for:

CAD: Pro/ENGINEER