UG425: Si3474/73/72 EVB User's Guide

The Si3474/73/72 EVB system comprises several components that enable evaluation of the Skyworks Si3474/73/72 series of IEEE-compliant, Power-over-Ethernet (PoE) controllers. The system consists of a motherboard (MB), various daughter cards (DCs), various connector boards (CBs), a user-provided, 50-volt power supply, and a USB cable allowing connection to a PC. The system enables the user to evaluate the PoE family of chips in configurations including IEEE 802.3af, 802.3at, and 802.3bt covering all eight classes and power levels. Various daughter cards allow switching between different controllers, and different connector boards allow for 2-pair or 4-pair operation with up to 8 simultaneously operating PoE ports. Using the provided USB cable and software, the user can experiment with different operating modes, view and set internal registers, and load the latest firmware.

KEY FEATURES

- IEEE 802.3bt compliant
- Up to four 4-pair ports or eight 2-pair ports
- AUTO Mode Jumpers
  - No software needed for basic operation
  - Configurable Max Port Power
- Direct I^2C Access to PSE Registers
  - USB interface using Skyworks CP2112 USB to I^2C Bridge
  - Python interface to Windows. See UG439: Si3474 Software User's Guide

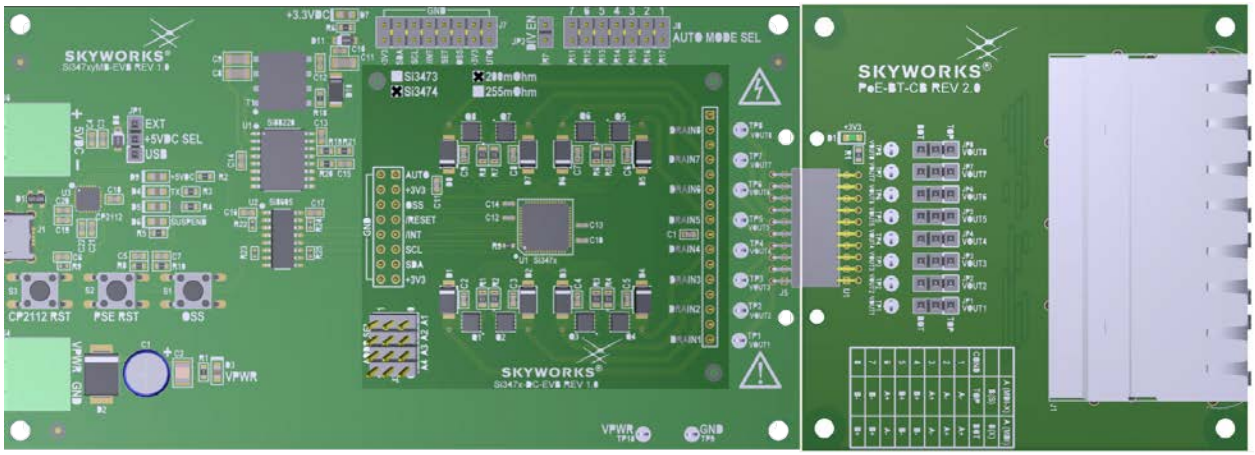

Table of Contents

1. Introduction . . . 3

2. Kit Description and Powering Up the Si3474/73/72 EVB System . . . 4

2.1 Si3474/73/72 EVB Motherboard Overview . . . 7

2.2 Use Cases . . . 7

2.2.1 Unhosted (AUTO Pin Autonomous Mode) . . . 8

2.2.2 I^2C Hosted . . . 11

3. Software Drivers . . . 12

4. Si3474/73/72 Motherboard, Daughter Boards, and Connector Board Schematics . . . 13

4.1 Motherboard Schematics . . . 13

4.2 Si3473 and Si3474 Daughter Card Schematics . . . 16

4.3 Si3472 Daughter Card Schematics . . . 20

4.4 4-Pair Connector Board Schematic (PoE-BT-CB) . . . 21

4.5 2-Pair Connector Board Schematic . . . 22

5. Si347xy EVB System . . . 23

5.1 Si3474/73/72 Motherboard BOM . . . 23

5.2 Si3473 or Si3474 Daughter Card BOM . . . 25

5.3 Si3472 Daughter Card BOM . . . 25

5.4 4-Pair Connector Board BOM . . . 26

5.5 2-Pair Connector Board BOM . . . 26

6. Sifos Test Reports . . . 27

7. Appendix . . . 45

1. Introduction

Each device in the Si3474/73/72 family of Power Sourcing Equipment (PSE) controllers is configured into "quads". A quad contains four PSE ports. The Si3474 and Si3473 have two quads while the Si3472 has one. All Si3474/73/72 PSEs can drive 2-pair ports, and the Si3474 can also be configured for 4-pair system operation. The daughtercards (DCs) in this EVB system provide the necessary circuitry to demonstrate the described functionality of each chip. Separate connector boards (CBs) provide the proper wiring for 2-pair or 4-pair operation. The motherboard (MB) powers the system, provides various pushbuttons, DIP switches, connection headers, and programming circuitry to communicate to the PSE on the DC via I^2C.

The Si3474/73/72 EVB can be jumper-selected (J8) to enable AUTO Pin Autonomous Mode, allowing the PSE to provide power without host software. When using the EVB system, the ports must either all be in 2-pair or 4-pair mode. To use the Si3474/73/72 with a combination of 4-pair and 2-pair ports, the Si3474/73/72 registers must be modified through I^2C. The Si3474/73/72 EVB allows access to the Si3474/73/72 registers through a Skyworks CP2112 USB to I^2C bridge. A Python interface is provided to allow evaluation with a Windows 10 or later PC.

The following table shows the array of PoE support in this evaluation system:

Features	Si3474/73/72 MB	Si3472 DC	Si3473 DC	Si3474 DC	PoE-BT-CB	PoE-BT-2P-CB
802.3bt	√	√	√	√	√	√
802.3af/at	√	√	√	√	√	√
2-pair ports	√	√	√	√	√	√
4-pair ports	√			√	√	
Four 2-pair ports	√	√	√	√	√	√
Eight 2-pair ports	√		√	√	√	√
Four 4-pair ports	√			√	√	
Mixed 4-pair and 2-pair ports	√			√	√	
Alt A/B selectable	√	√	√	√		√
Class 1-4 (to 30W)	√	√	√	√	√	√
Class 5-8 (to 90W)	√			√	√	

Table 1.1. Specifications

Parameter	Condition	Specifications
PoE Input Voltage Range	Through Connector J4	52 to 57 V
PoE Type/Class	Up to Type 4, Class 8	IEEE 802.3bt/af/at
Digital Voltage	Using J6/JP1	5 VDC
Data Input	J1	USB
Daughter Card Size	English/Metric	2.5 x 2.5 inches, 61 x 61 mm
Motherboard Size	English/Metric	3 x 5.35 inches, 76 x 136 mm
EVB Height	English/Metric (excluding headers)	1.2 inch, 30 mm

2. Kit Description and Powering Up the Si3474/73/72 EVB System

The Si3474/73/72 EVB system consists of a four-layer daughter card, a four-layer motherboard, and an RJ45 connector board.

The daughter card includes the PSE chip, FETs, and the ADDR SEL jumpers. The ADDR SEL jumpers configure the base I²C address that the PSE chip responds to. Each PSE quad responds to an individual I²C address, as described in Table 2.1 I²C Address Selection Table on page 5.

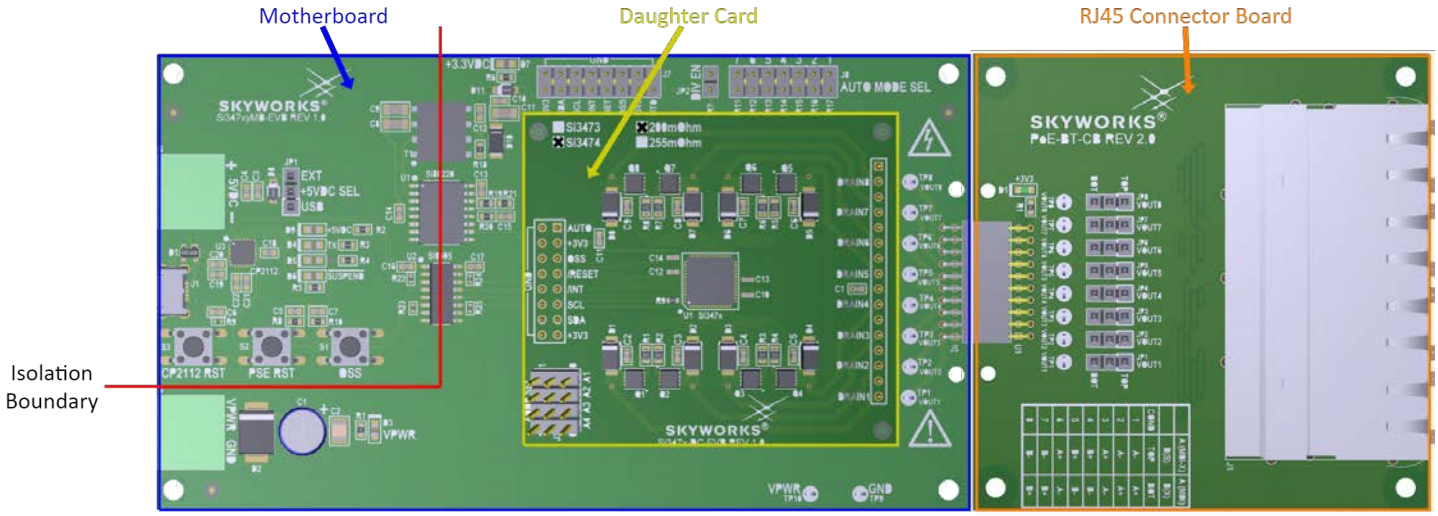

Figure 2.1. Si3474/73/72 MB-EVB Motherboard, Daughter Card, and RJ45 Connector Board

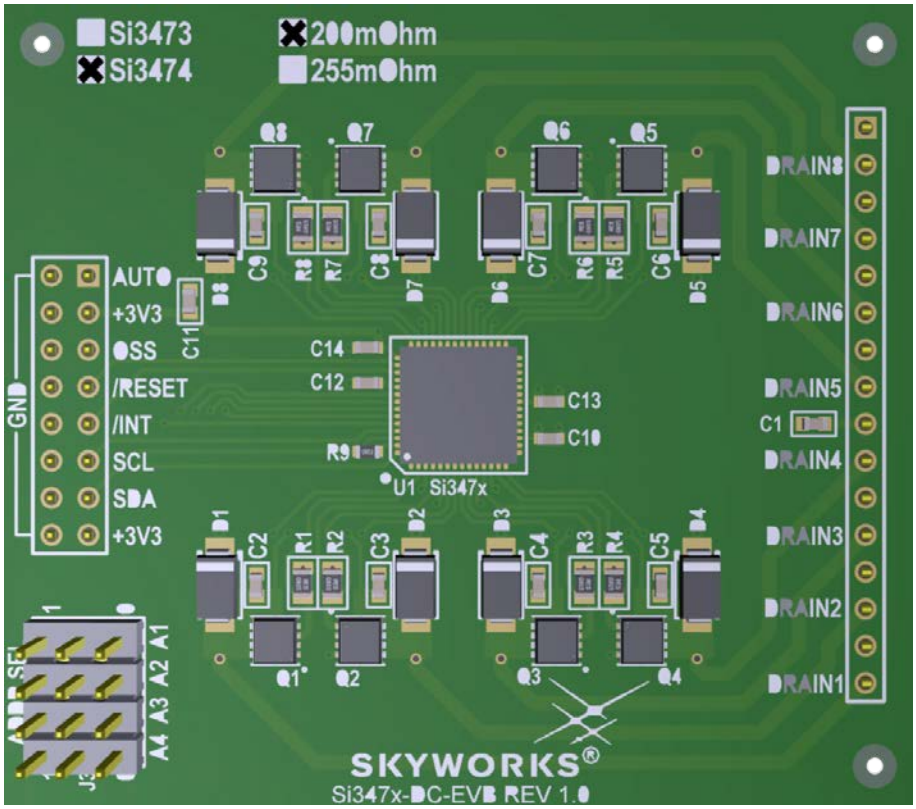

Figure 2.2. Si3474DC-EVB Daughter Card

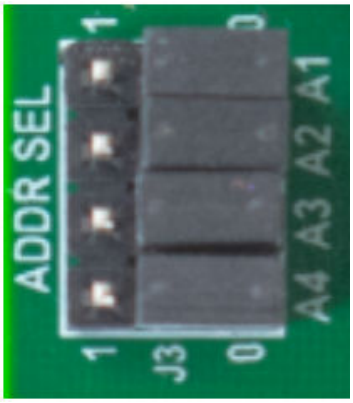

Figure 2.3. ADDR SEL Configuration Header

Table 2.1. I²C Address Selection Table

A4[1]	A3	A2	A1	Quad 0 I²C Address	Quad 1 I²C Address[1]
0	0	0	0	0x20	0x21
0	0	0	1	0x22	0x23
0	0	1	0	0x24	0x25
0	0	1	1	0x26	0x27
0	1	0	0	0x28	0x29
0	1	0	1	0x2A	0x2B
0	1	1	0	0x2C	0x2D
0	1	1	1	0x2E	0x2F
1	0	0	0	0x30	0x31
1	0	0	1	0x32	0x33
1	0	1	0	0x34	0x35
1	0	1	1	0x36	0x37
1	1	0	0	0x38	0x39
1	1	0	1	0x3A	0x3B
1	1	1	0	0x3C	0x3D
1	1	1	1	0x3E	0x3F

Note:

1. Not available on the Si3472 daughter card (Si3472DC-EVB).

The behavior of the status LEDs on the Si3474/73/72 EVB MB is described in the figure below.

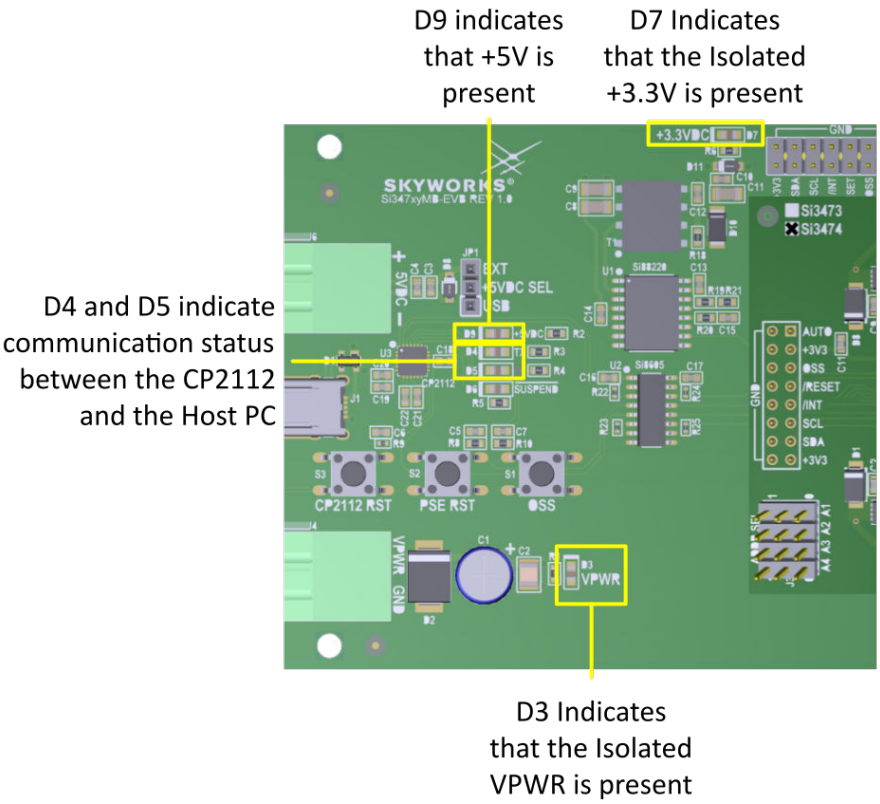

Figure 2.4. Status LEDs

The behavior of the buttons on the Si3474/73/72 EVB MB is described in the figure below.

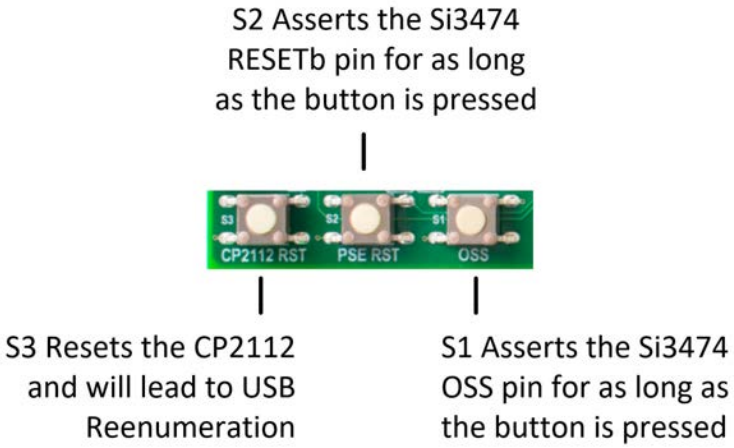

Figure 2.5. Buttons

2.1 Si3474/73/72 EVB Motherboard Overview

The Si3474/73/72 EVB motherboard consists of:

- Status LEDs
- Terminal blocks for power
- USB connector
- AUTO mode selection jumpers

The RJ45 connectors are located on the connector board (POE-BT-CB for 4-pair operation and POE-BT-2P-CB for 2-pair operation). The connector board also has jumpers allowing configuration of the RJ45 connectors for either 802.3bt 4-pair port usage or for 802.3at 2-pair port usage.

2.2 Use Cases

The following sections describe the most common use cases for the USB connector, terminal blocks, AUTO mode selection jumpers, and the connector board jumper connections from a system perspective.

Refer to the appendix if you have PoE-BT-CB Rev 1.0 or are not sure which revision you have.

2.2.1 Unhosted (AUTO Pin Autonomous Mode)

2.2.1.1 2-Pair Mode

The following figure shows the use case where the Si3474, on the Si3474DC-EVB daughter card, is used as a 2-pair PSE without an I²C host. The JP2 AUTO MODE SEL in this case can be set to either Position 7 or Position 6. The corresponding selection jumpers on the PoE-BT-CB connector board will need to be set in an alternating fashion so that the eight 802.3at ports can drive the RJ45 jacks as shown. The VPWR polarity of the top-row RJ45 jacks has an opposite polarity relative to the ports on the bottom-row RJ45. Two power supplies are needed for this configuration. The +54 V provides power to powered devices (PDs) and to the Si3474 VPWR. The +5 V supply powers the Si3474 VDD via isolated dc-dc converter.

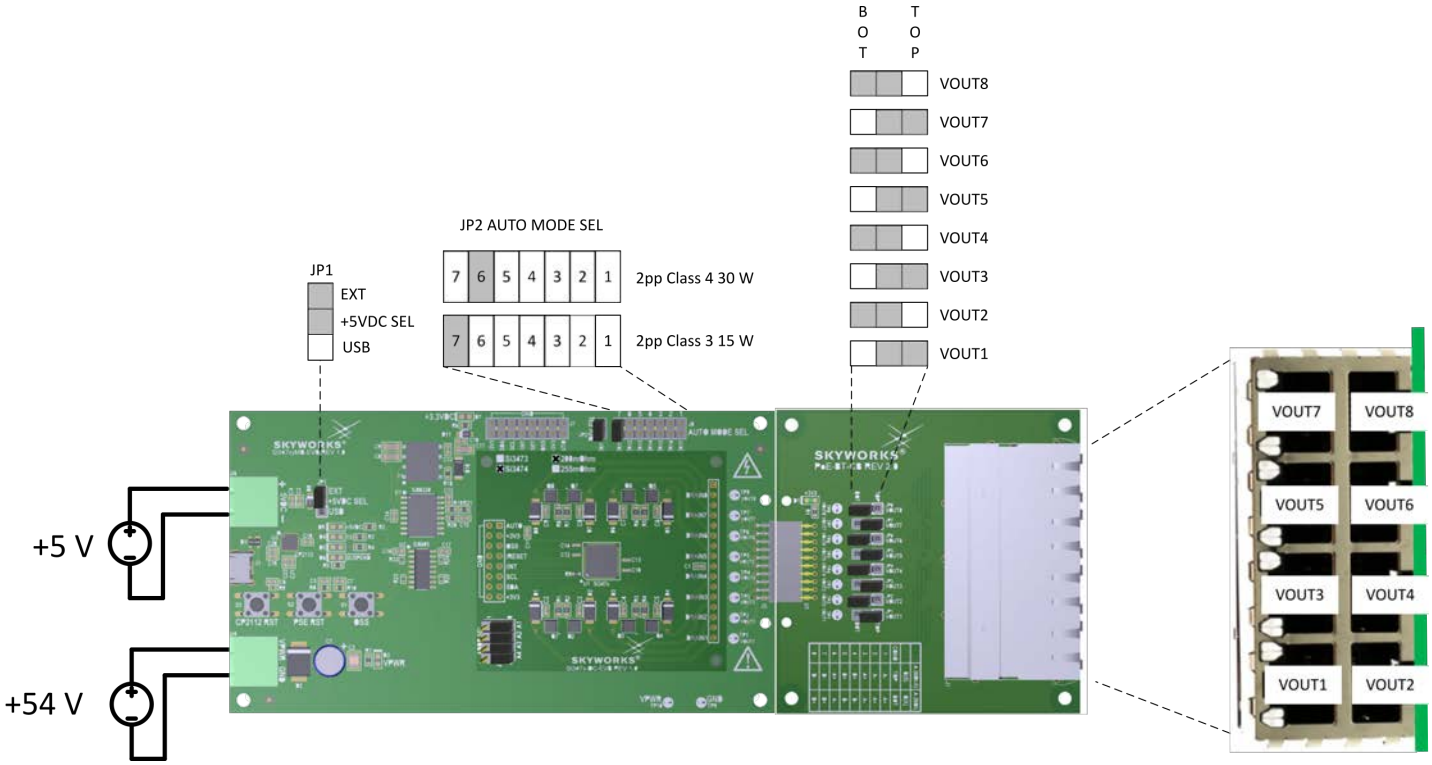

Figure 2.6. Si3474 No I²C Host, Eight 2-Pair Ports

Figure 2.7 shows the Si3472, on the Si3472DC-EVB daughter card, using the 2-pair PoE-BT-2P-CB connector board without an I²C host. In this case the JP2 jumper is set for 2-pair, Class 3, 15W operation but can be set for any of the classes listed. On the PoE-BT-2P-CB, the ports are configured for Alternate A (Alt-A) operation. Each port can be configured to use Alt-A or Alt-B pairs, depending on whether you're operating as an endspan or midspan PSE. Alt-A is the typical choice for endspan and Alt-B for midspan. The power supplies are the same as listed for the Si3474; +54V to power attached PDs and +5V for the Si3472.

The Si3473 is not illustrated but has the same configuration as the Si3472. The Si3473 can drive all 8 ports of the PoE-BT-2P-CB connector board while the Si3472 can only drive the first four.

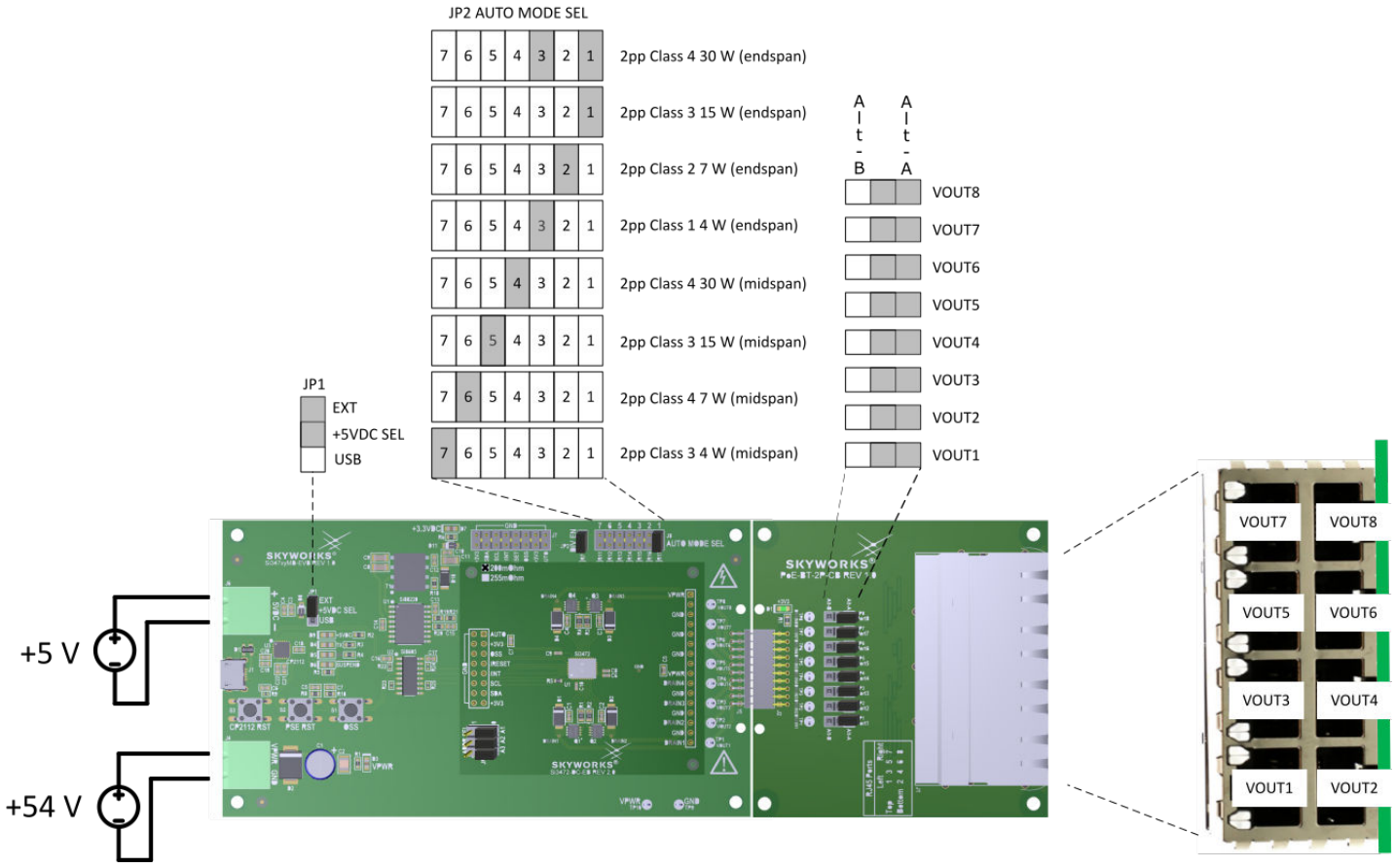

Figure 2.7. Si3472, No I²C Host, Four 2-Pair Ports

The configuration for the Si3472 and Si3473 is similar except for the connector board. The following figure shows the Si3472 daughter card paired with the PoE-BT-2P-CB connector board. Endspan or midspan operation is selectable by switching between Alt-A and Alt-B respectively. Here Alt-A has been selected on all ports except for Port 1, which is set for Alt-B operation.

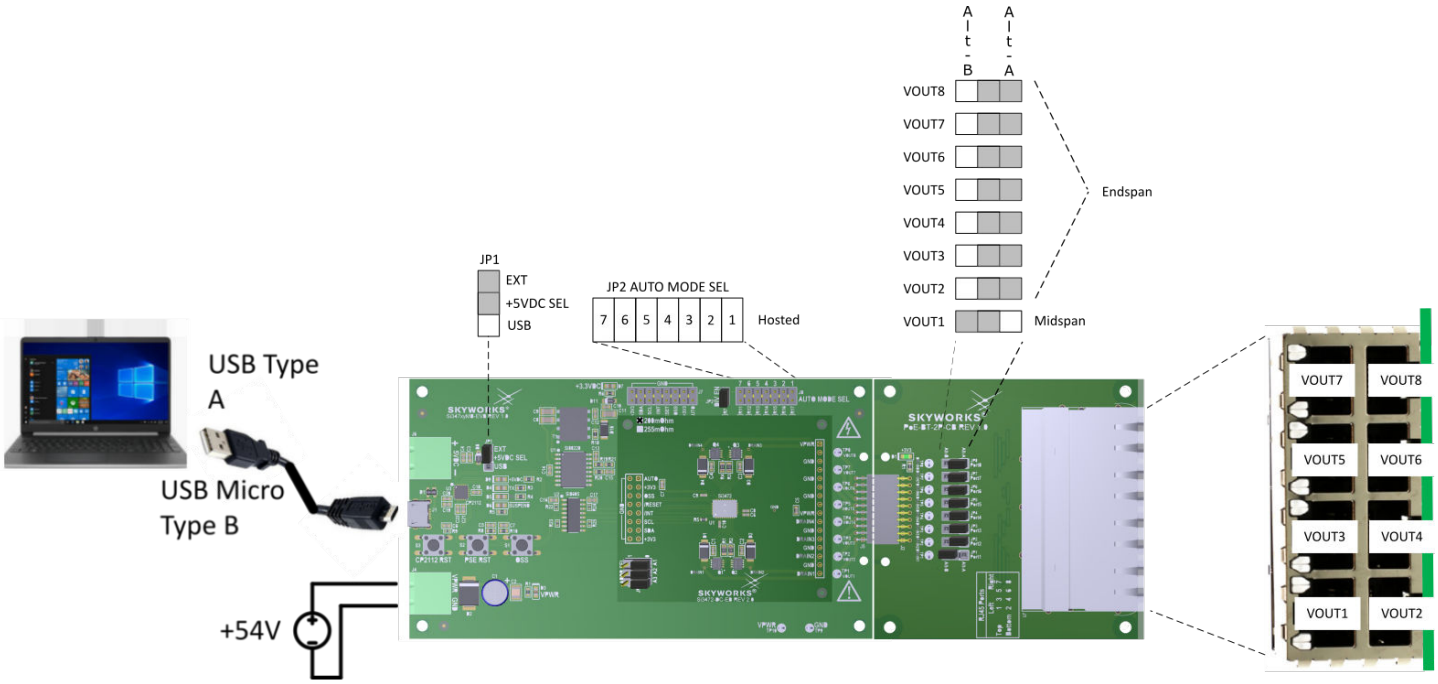

Figure 2.8. Si3472 I²C Hosted

2.2.1.2 4-Pair Mode

The figure below shows the use case where the Si3474 is used as a 4-pair PSE without an I2C host. The JP2 AUTO MODE SEL in this case can be set to either Position 1, 2, 3, 4, or Position 5, depending on the desired level of power allocation, as described in the figure. The corresponding selection jumpers on the PoE-BT-CB will need to be set to all "Top" positions. Four of the RJ45 jacks will be active while the other four RJ45 jacks are not connected.

It is also possible to configure the jumpers to all "BOT" instead of all "TOP" (then use the bottom RJ45 jacks). When using the bottom RJ45s, the VPWR polarity will be inverted relative to when using the top RJ45 jacks. Two power supplies are needed for this configuration. The +54 V provides power to PDs as well as to the Si3474 VPWR. The +5 V supply is used to supply power to the Si3474 VDD, albeit indirectly through isolation via an isolated dc-dc converter.

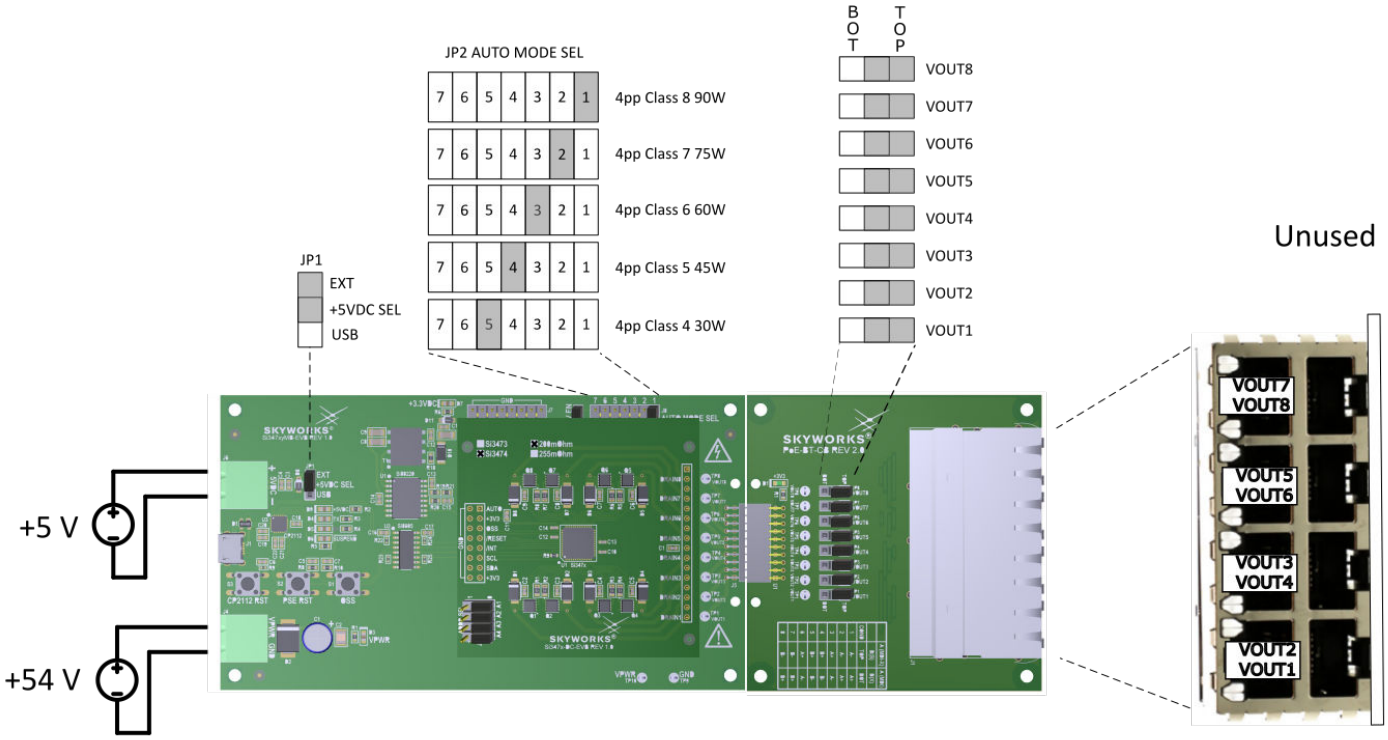

Figure 2.9. Si3474 No I2C Host, Four 4-Pair Ports

2.2.2 I²C Hosted

The following figure shows the use case where the Si3474 is controlled by an I²C host. In this case, all JP2 AUTO MODE SEL jumpers are removed to indicate a hosted I²C operation mode. The selection jumpers on the PoE-BT-CB will need to be set up, depending on the expected programming of bits 4 and 7 of Register 0x29 on both quads. One power supply is needed for this configuration. The +54 V provides power to PDs as well as to the Si3474 VPWR. The JP1 jumper is placed so that the +5 V supply is derived from USB. The 5 V USB rail supplies power to the Si3474 VDD via isolated dc-dc converter.

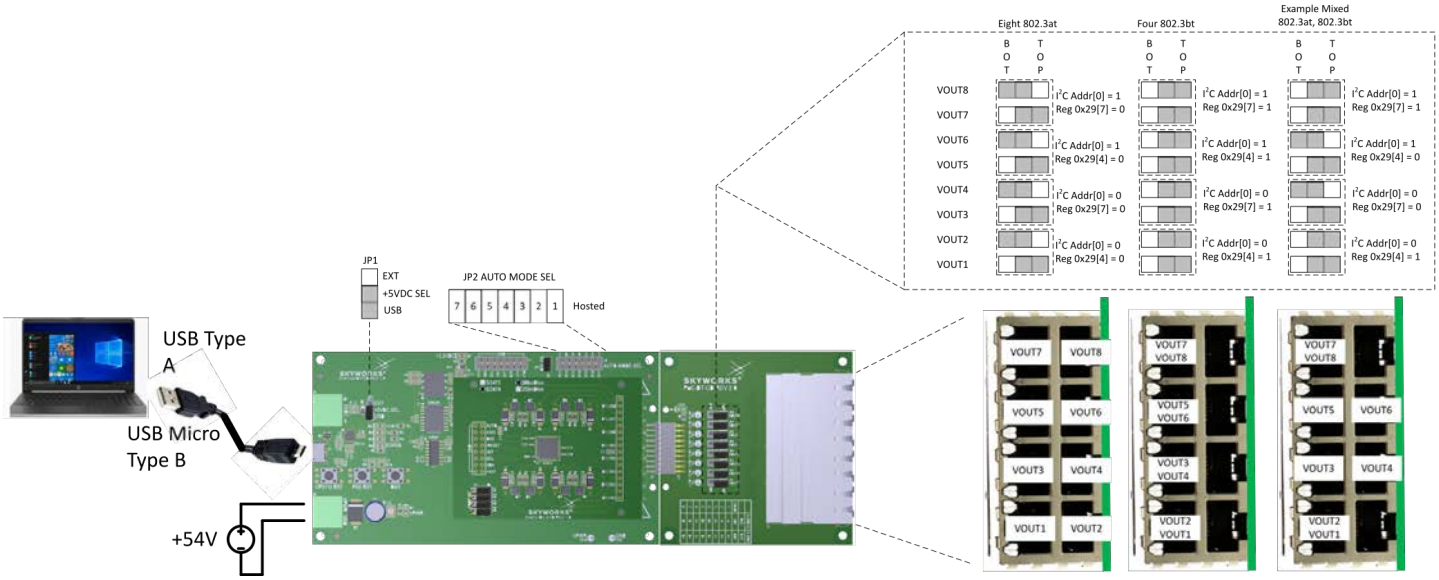

Figure 2.10. Si3474 I²C Hosted

3. Software Drivers

The Si3474/73/72 MB has a USB port that allows the PSE to communicate with a Windows PC host. To download the installation guide, software, and additional documentation, visit www.skyworksinc.com and search for Si3472-KIT.

4. Si3474/73/72 Motherboard, Daughter Boards, and Connector Board Schematics

Skyworks will provide a free schematic and PCB layout review. Visit www.skyworksinc.com/support to submit a support request for the review.

4.1 Motherboard Schematics

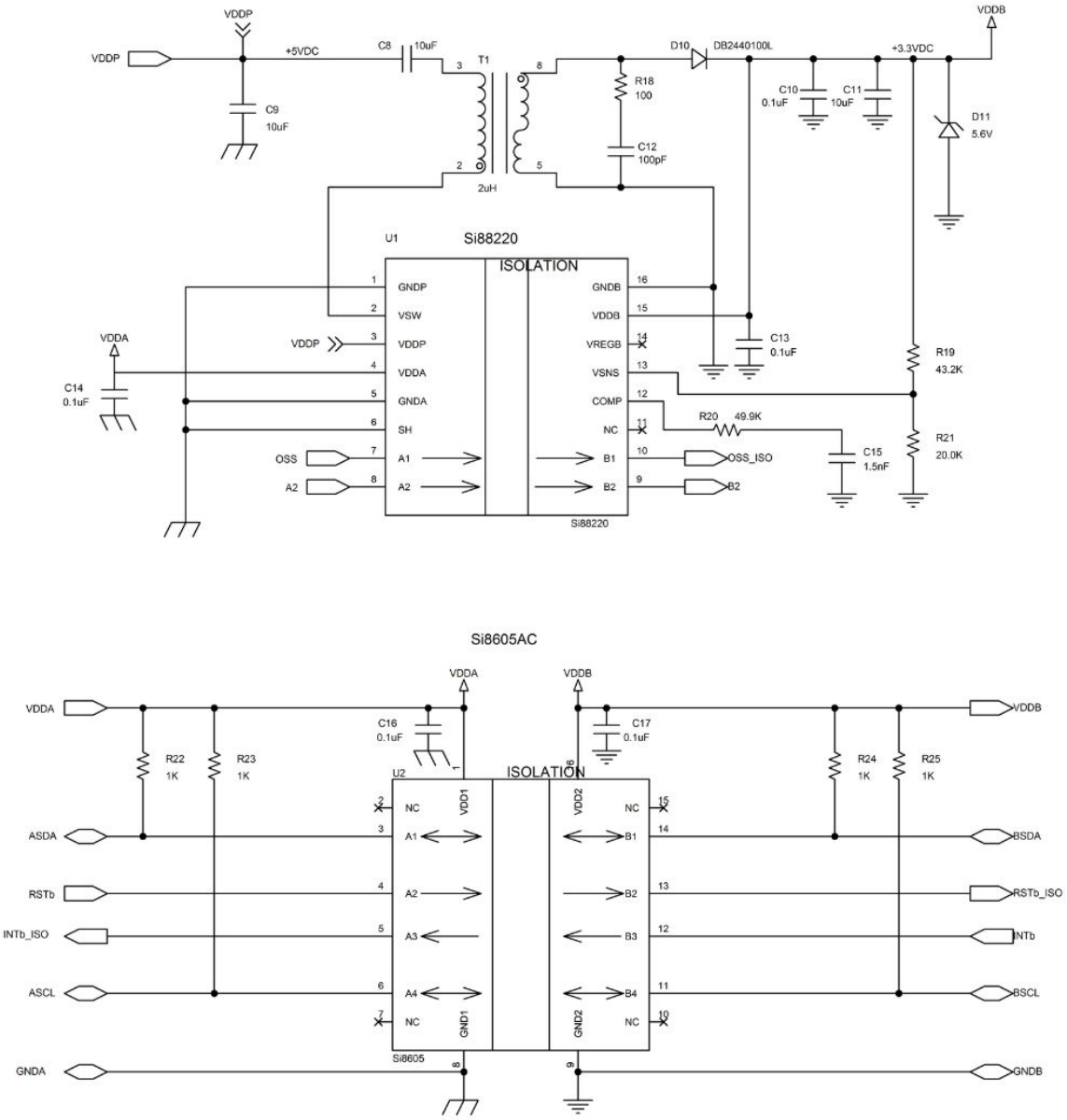

Figure 4.1. Motherboard Isolations

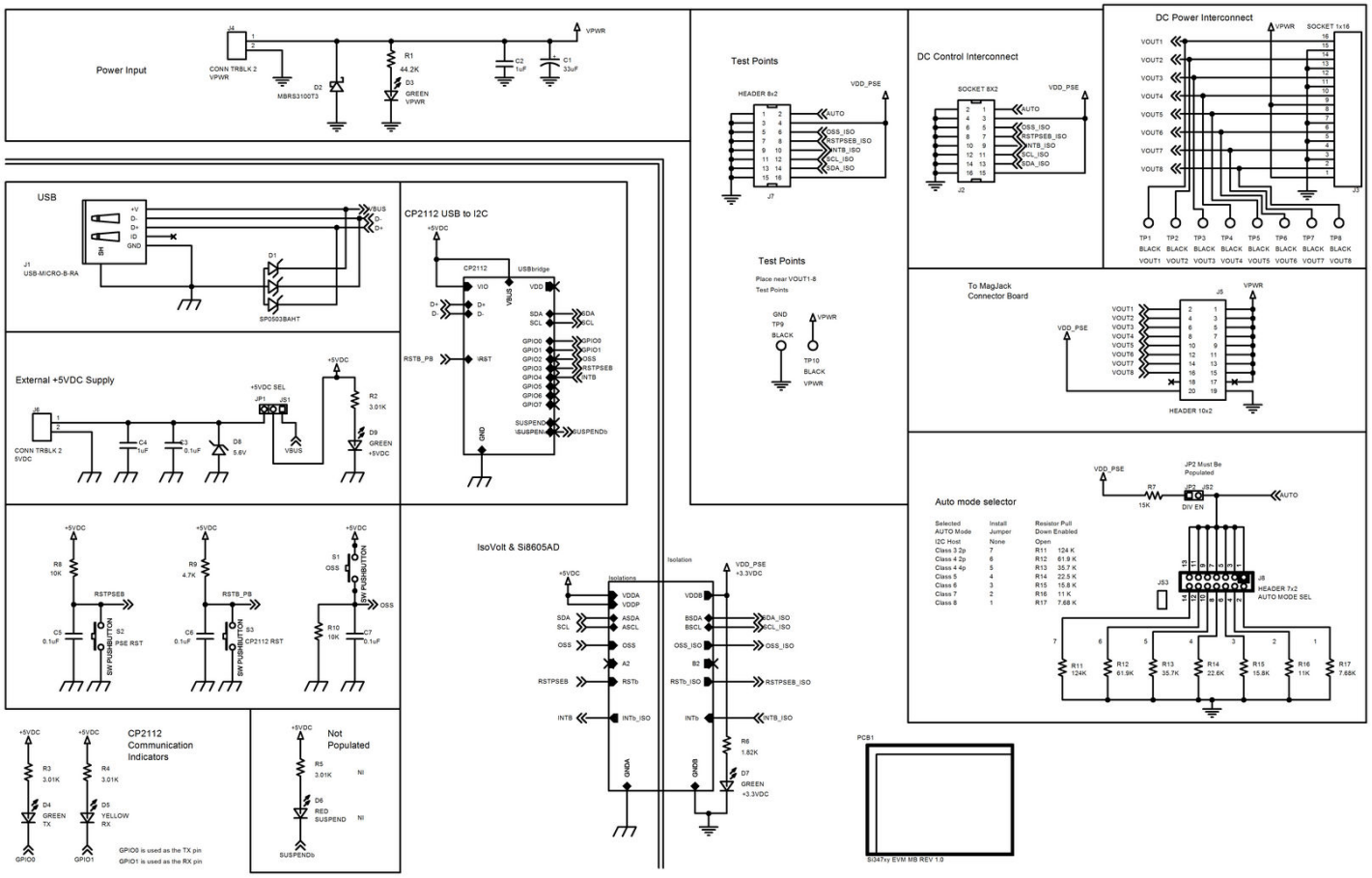

Figure 4.2. Motherboard Top

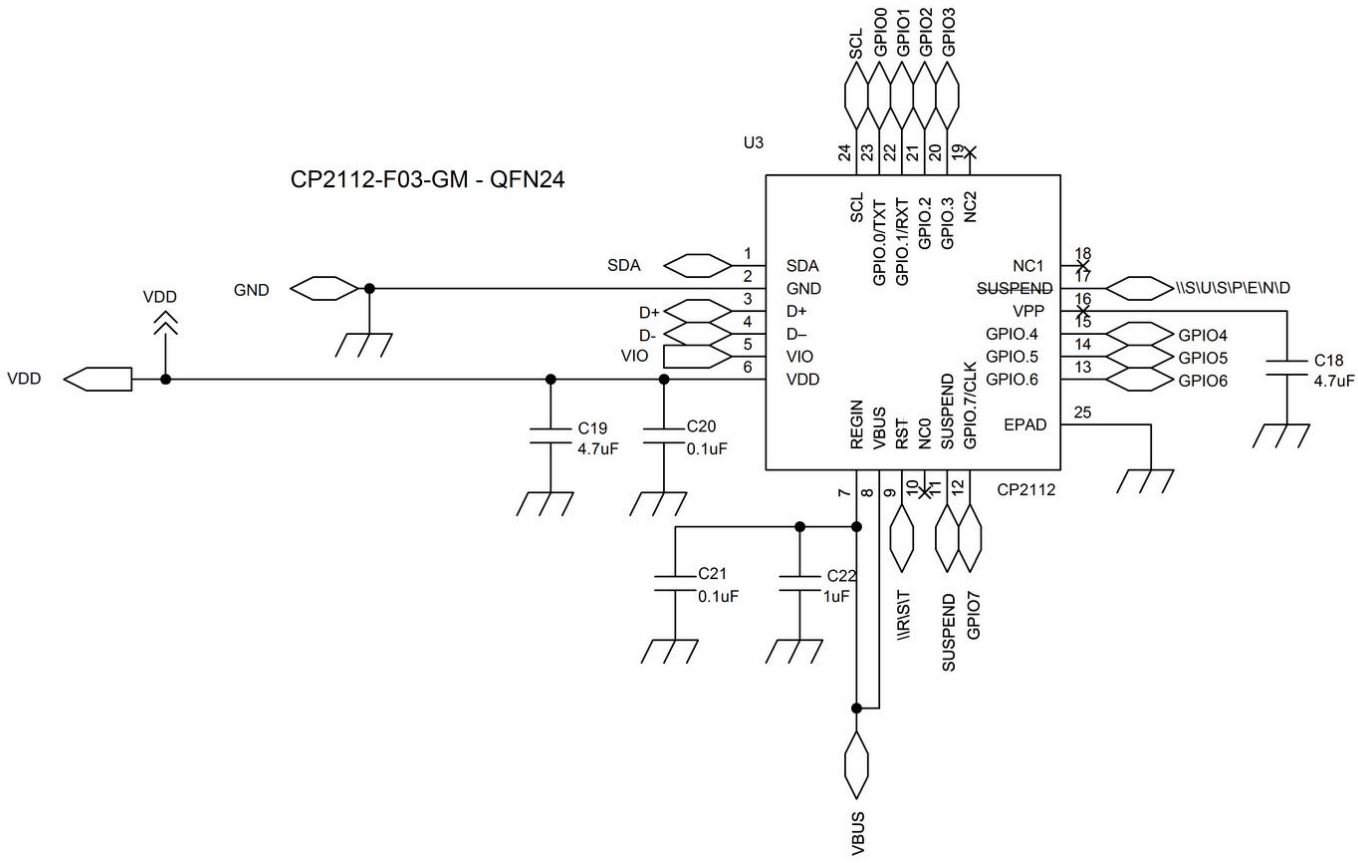

Figure 4.3. Motherboard USB Bridge

4.2 Si3473 and Si3474 Daughter Card Schematics

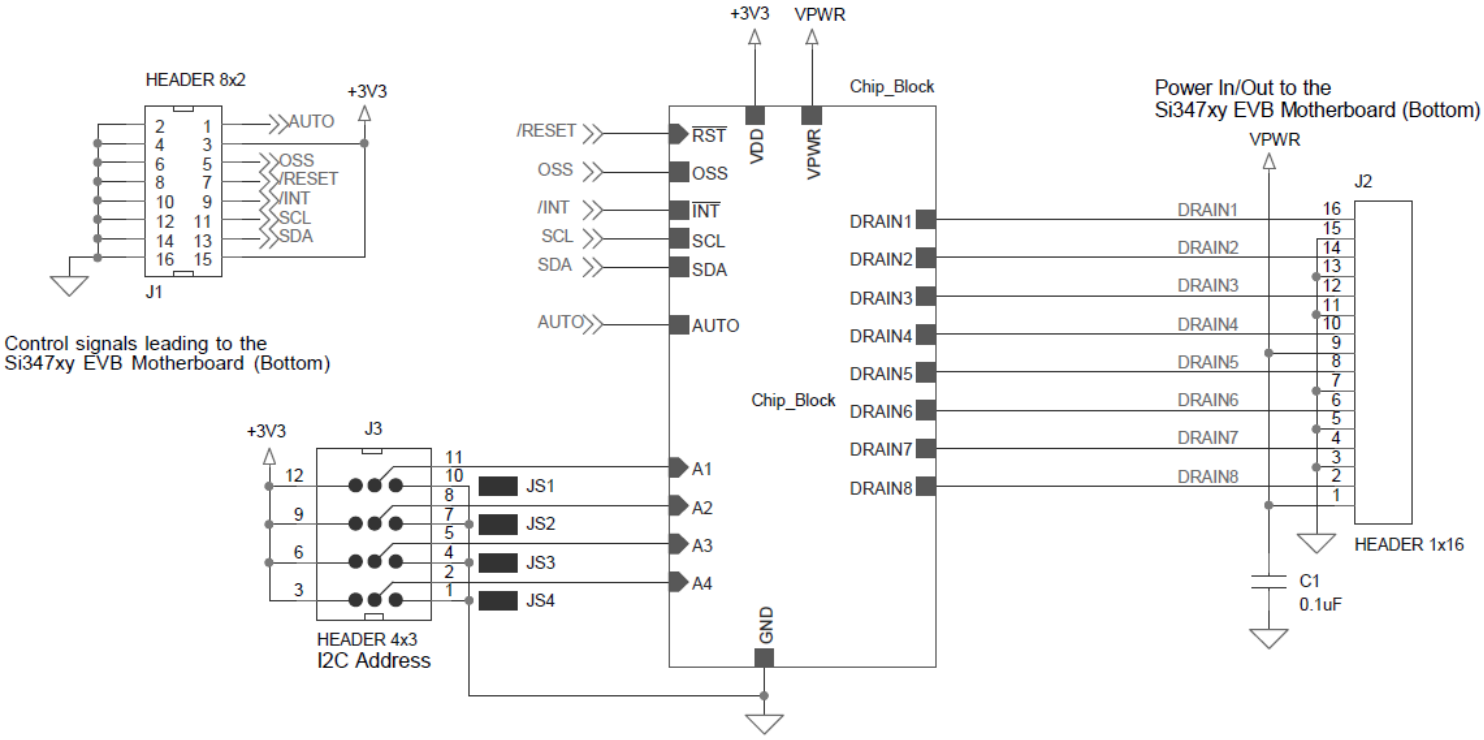

Figure 4.4. DC Schematic 1

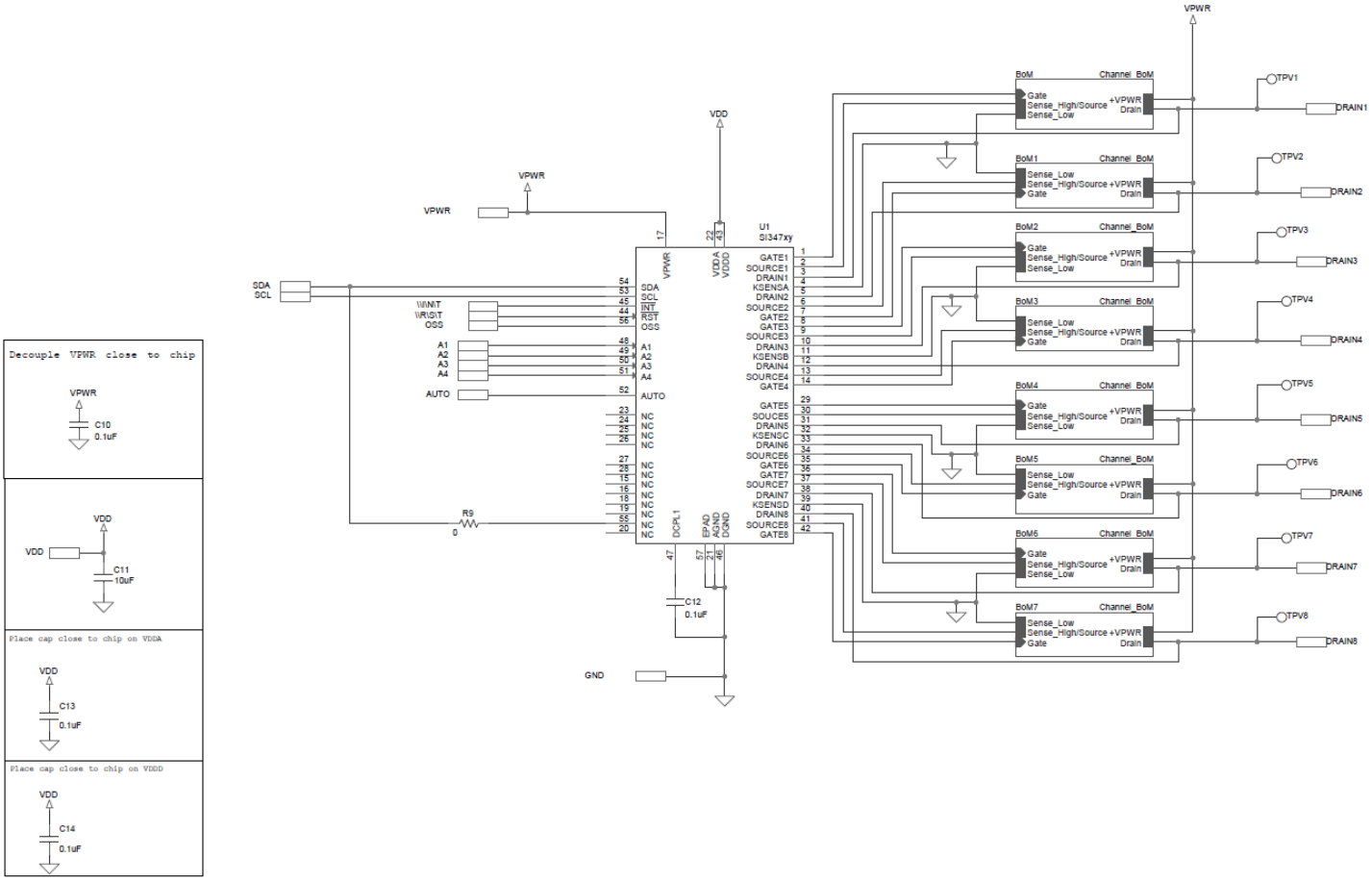

Figure 4.5. DC Schematic 2

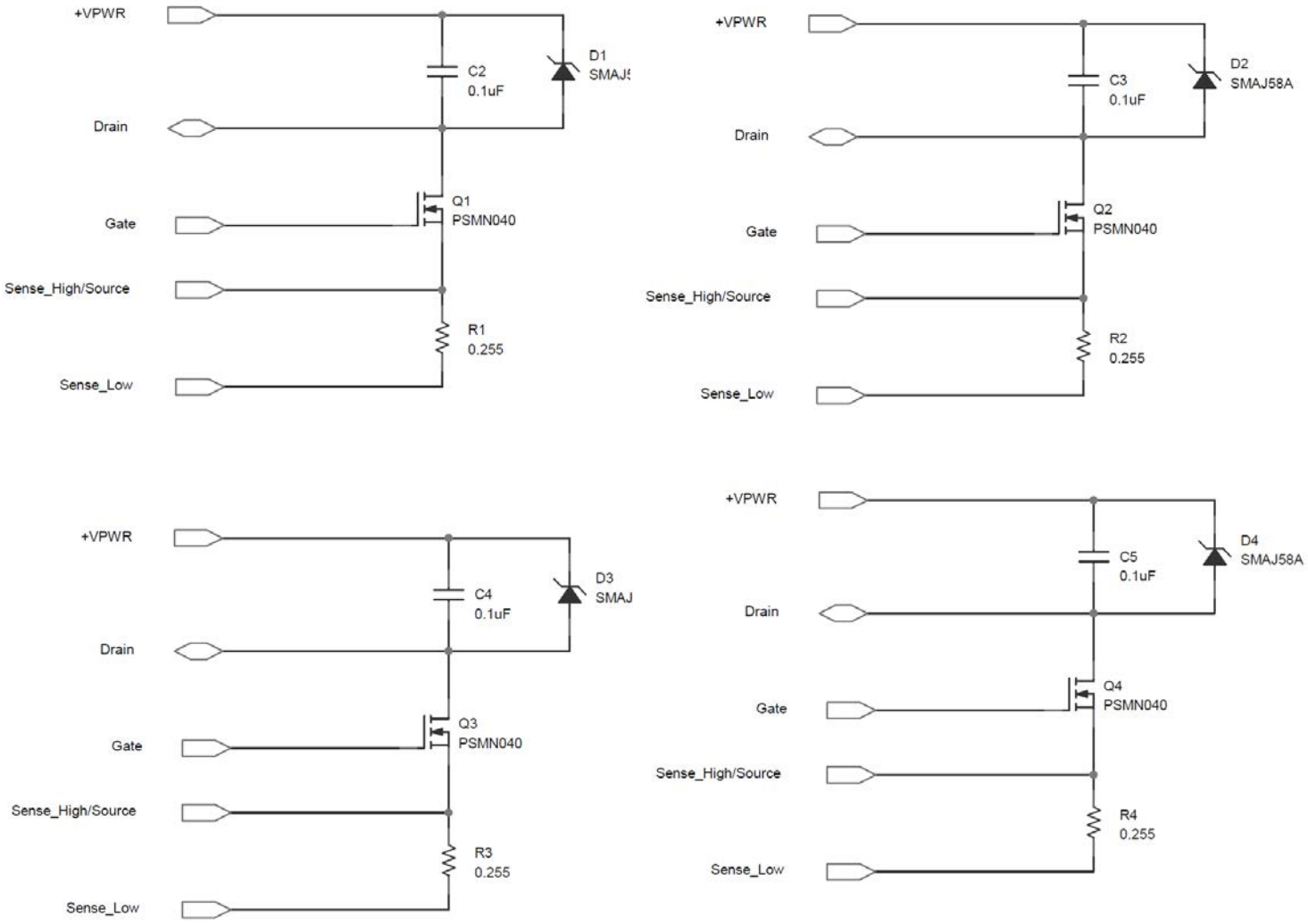

Figure 4.6. DC Schematic 3

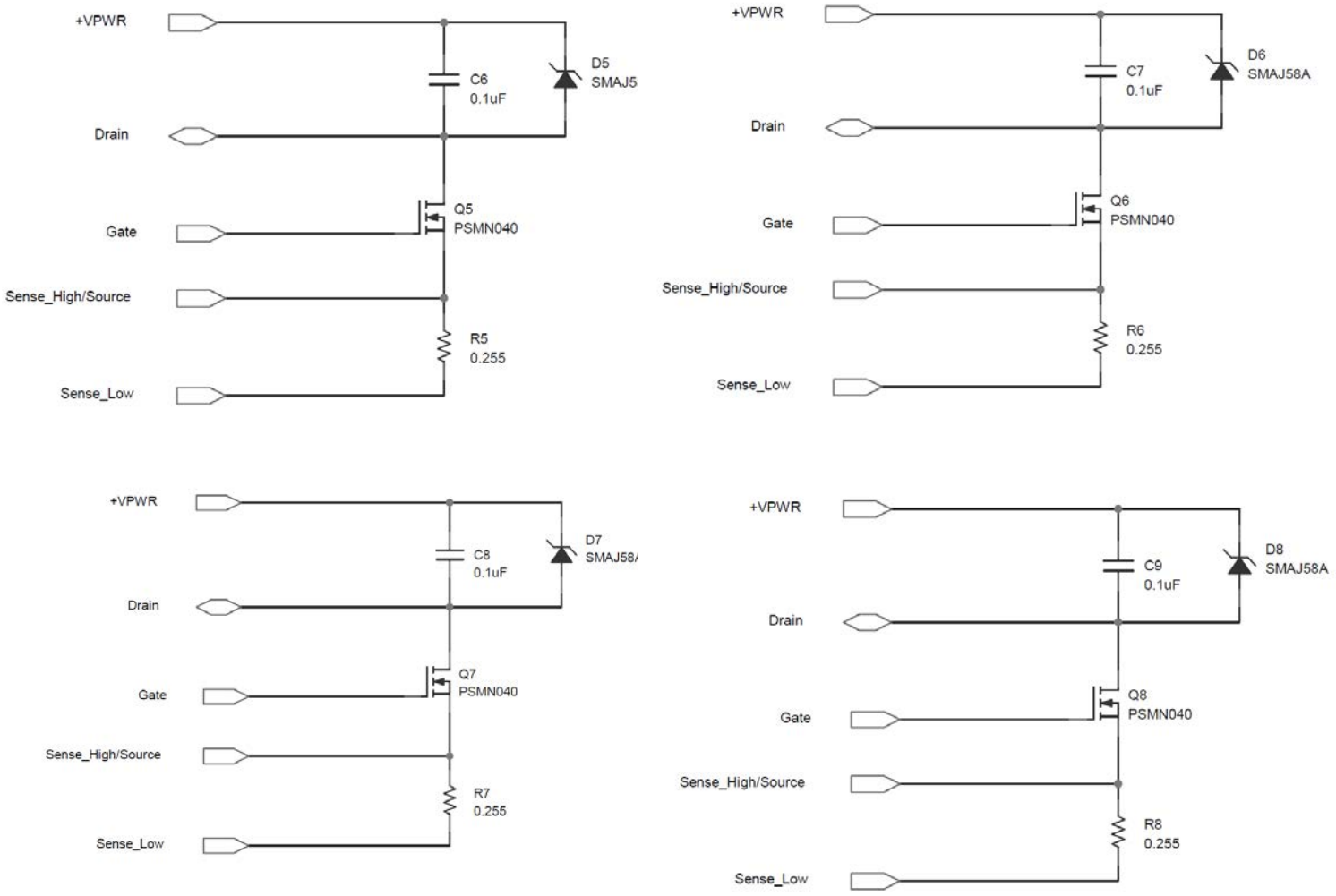

Figure 4.7. DC Schematic 4

4.3 Si3472 Daughter Card Schematics

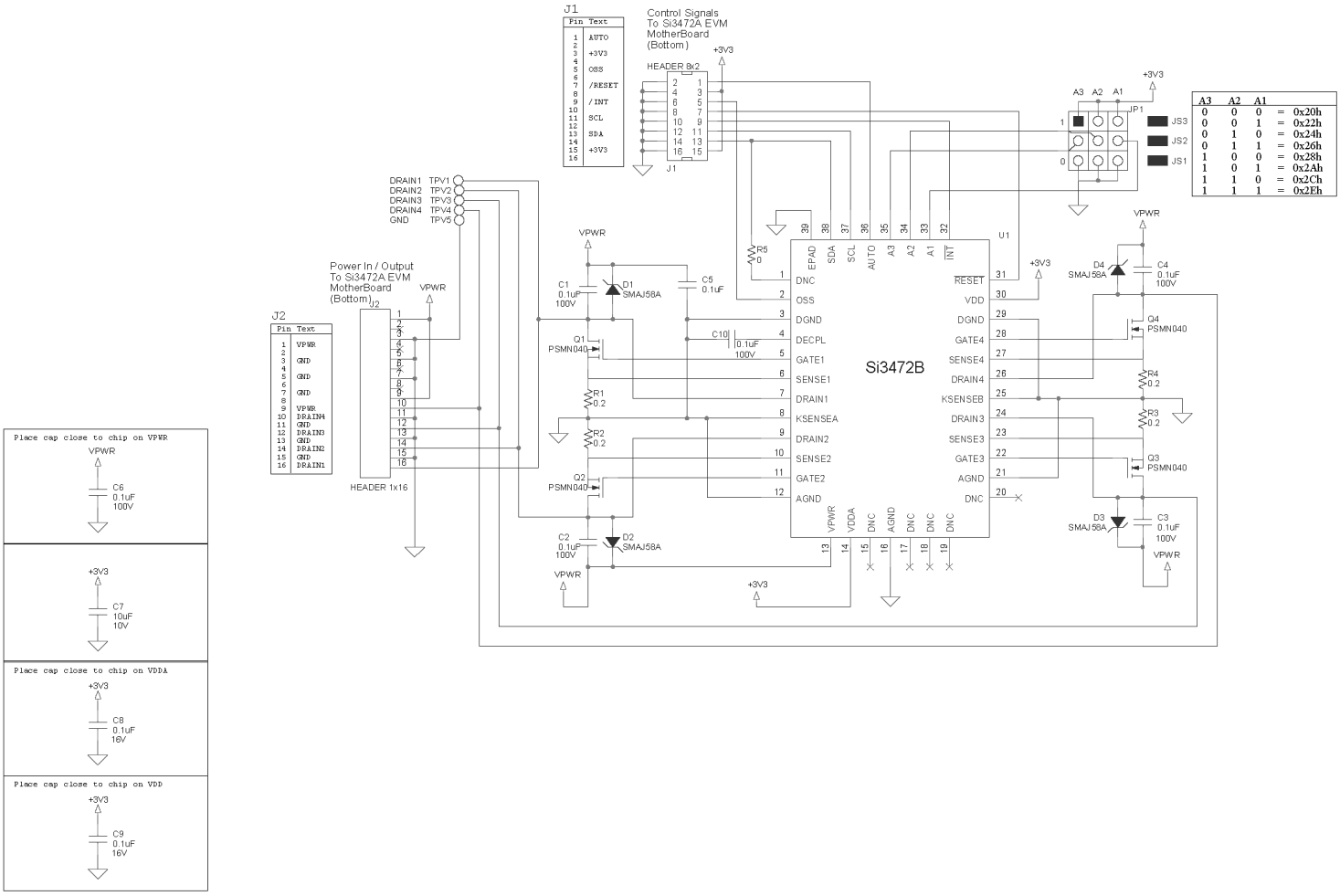

Figure 4.8. Si3472 Daughter Card

4.4 4-Pair Connector Board Schematic (PoE-BT-CB)

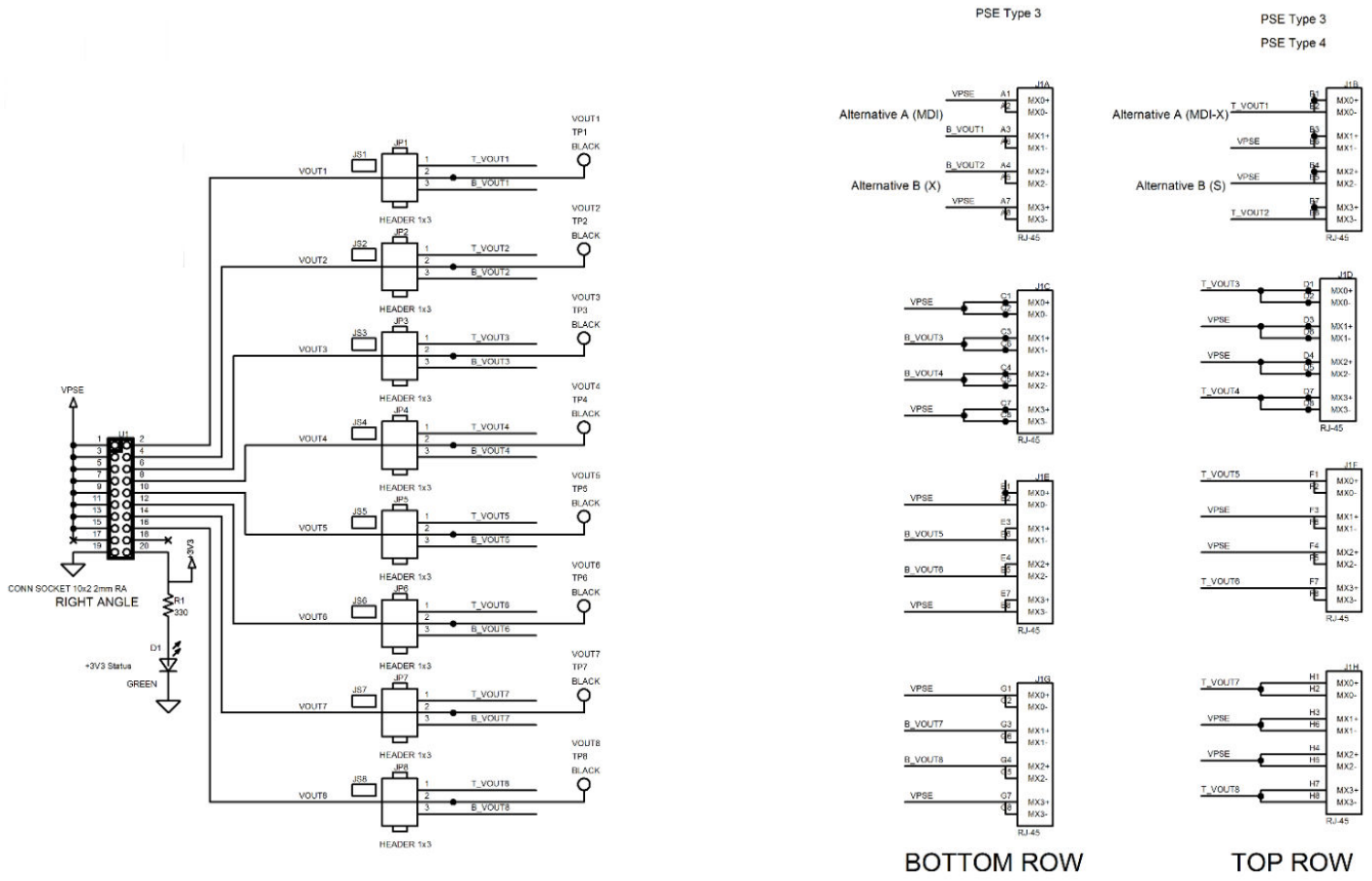

Figure 4.9. 4-Pair Connector Board Schematic

4.5 2-Pair Connector Board Schematic

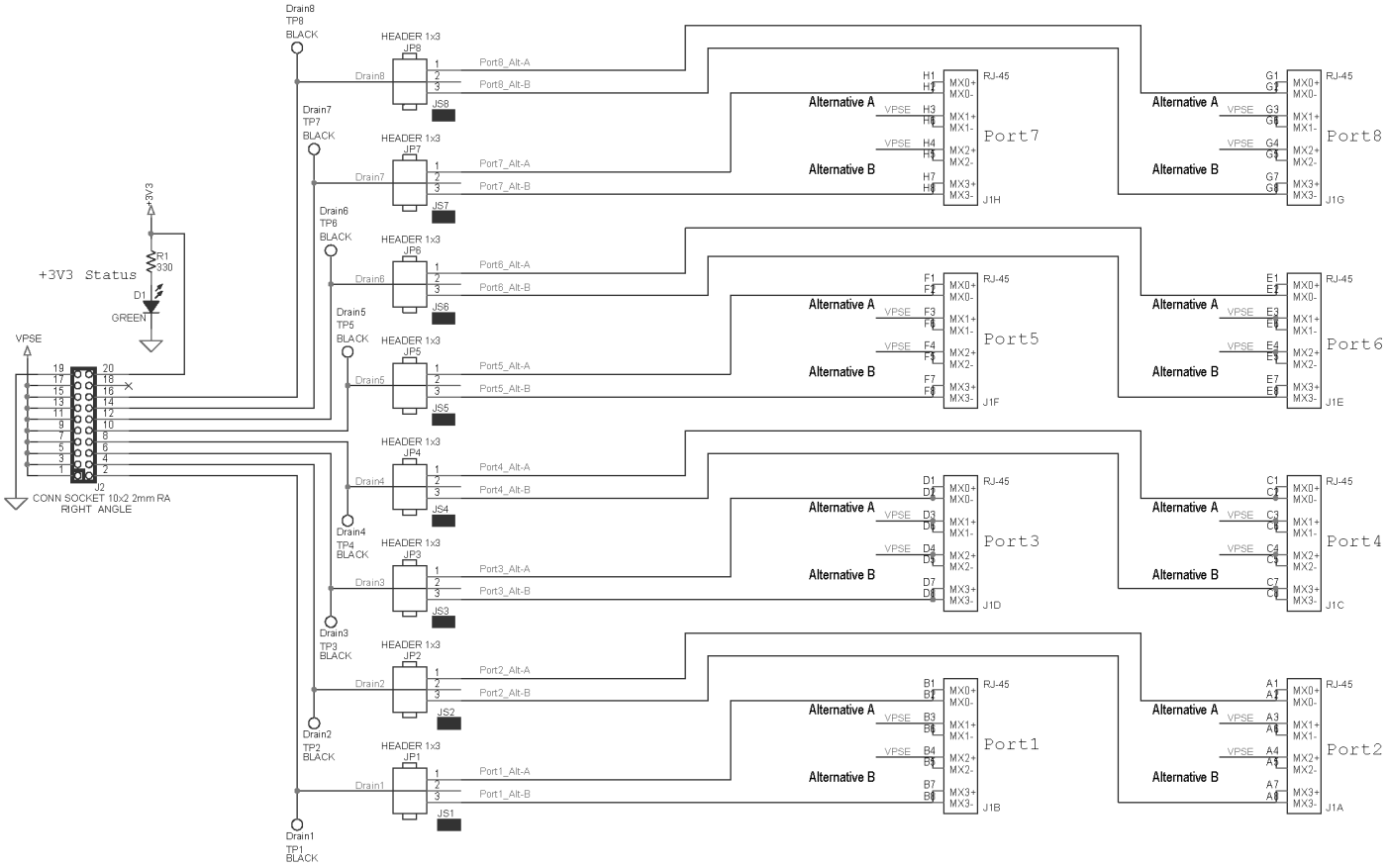

Figure 4.10. 2-Pair Connector Board Schematic

5. Si347xy EVB System

5.1 Si3474/73/72 Motherboard BOM

Designator	Qty	Value	PCB Footprint	Mfr	Mfr Part Number
C12	1	100 pF	C0603	Venkel	C0603X7R500-101K
C15	1	1.5 nF	C0603	Venkel	C0603X7R160-152K
C3, C5, C6, C7, C10, C13, C14, C16, C17, C20, C21	11	0.1 µF	C0603	Venkel	C0603X7R100-104K
C4, C22	2	1 µF	C0603	Murata	GRM188R71A105KA61D
C2	1	1 µF	C1210	Venkel	C1210X7R101-105K
C18, C19	2	4.7 µF	C0603	Venkel	C0603X5R100-475K
C8, C9, C11	3	10 µF	C1206	Venkel	C1206X7R100-106K
C1	1	33 µF	C3.5X8MM-RAD	Panasonic	ECA2AM330
D1	1	SP0503BAHT	SOT143-AKKK	Littlefuse	SP0503BAHTG
D2	1	MBRS3100T3	DO-214AB	On Semi	MBRS3100T3
D3, D4, D7, D9	4	Green	LED-0805-K	Lite On, Inc.	LTST-C170GKT
D5	1	Yellow	LED-0805-K	Rohm Semiconductor	SML-212WTT86A
D8, D11	2	5.6 V	SOD-123	On Semi	MMSZ5232BT1G
D10	1	DB2440100L	SOD-128	Panasonic	DB2440100L
JP1	1	Header 1x3	CONN-1X3	Samtec	TSW-103-07-T-S
JP2	1	Header 1x2	CONN1X2	Samtec	TSW-102-07-T-S
JS1, JS2, JS3	3	Jumper Shunt	N/A	Samtec	SNT-100-BK-T
J1	1	USB-MICRO-B-RA	MICRO-USB-PTH-WURTH	Wurth	6.29105E+11
J2	1	Socket 8 x 2	CONN2X8-SSW	Samtec	SSW-108-01-T-D
J3	1	Socket 1 x 16	CONN-1X16	Samtec	SSW-116-01-T-S
J4, J6	2	Conn TRBLK 2	CONN-TB-1757242	Phoenix Contact	1757242
J5	1	Header 10 x 2	CONN2X10-RA-2MM	Samtec	TMM-110-01-T-D-RA
J7	1	Header 8 x 2	CONN2X8	Samtec	TSW-108-07-S-D
J8	1	Header 7 x 2	CONN-2X7-TSW	Samtec	TSW-107-07-T-D
MH1, MH2, MH3, MH4, MH5	5	4-40	MH-125NP	Richco Plastic Co.	NSS-4-4-01
PCB1	1	Si347xy EVM MB REV 1.0	N/A	Skyworks, Inc.	Si347xy EVM MB REV 1.0
R18	1	100 Ω	R0603	Venkel	CR0603-16W-1000F
R22, R23, R24, R25	4	1 kΩ	R0402	Venkel	CR0402-16W-1001F
R6	1	1.82 kΩ	R0603	Venkel	CR0603-10W-1821F
R2, R3, R4	3	3.01 kΩ	R0603	Venkel	CR0603-16W-3011F
R9	1	4.7 kΩ	R0402	Venkel	CR0402-16W-472JT

Designator	Qty	Value	PCB Footprint	Mfr	Mfr Part Number
R17	1	7.68 kΩ	R0603	Venkel	CR0603-16W-7681F
R8, R10	2	10 kΩ	R0603	Venkel	CR0603-10W-103J
R16	1	11 kΩ	R0603	Venkel	CR0603-16W-1102F
R7	1	15 kΩ	R0603	Venkel	CR0603-10W-1502F
R15	1	15.8 kΩ	R0603	Venkel	CR0603-16W-1582F
R21	1	20.0 kΩ	R0603	Venkel	CR0603-16W-2002F
R14	1	22.6 kΩ	R0603	Venkel	CR0603-16W-2262F
R13	1	35.7 kΩ	R0603	Venkel	CR0603-16W-3572F
R19	1	43.2 kΩ	R0603	Yageo	RC0603FR-0743K2L
R1	1	44.2 kΩ	R0603	Venkel	CR0603-10W-4422F
R20	1	49.9 kΩ	R0603	Venkel	CR0603-10W-4992F
R12	1	61.9 kΩ	R0603	Venkel	CR0603-16W-6192F
R11	1	124 kΩ	R0603	Venkel	CR0603-16W-1243FT
SO1, SO2, SO3, SO4, SO5	5	STANDOFF		SPC Technology	2397
S1, S2, S3	3	SW Pushbutton	SW4N10P4.5	Tyco Electronics	2-1437565-8
TP1, TP2, TP3, TP4, TP5, TP6, TP7, TP8, TP9, TP10	10	Black	Testpoint	Kobiconn	151-203-RC
T1	1	2 µH	IND-UTB00569S	UMEC	UTB02185s
U1	1	Si88220	SO16N10.3P1.27	Skyworks, Inc.	Si88220EC-IS
U2	1	Si8605	SO16N6.0P1.27	Skyworks, Inc.	Si8605AC-B-IS1
U3	1	CP2112	QFN24N4X4P0.5	Silicon Labs	CP2112-F03-GM
Not Installed Components					
D6	1	Red	LED-0805-K	Rohm Semiconductor	SML-212U2TT86A
R5	1	3.01 kΩ	R0603	Venkel	CR0603-16W-3011F

5.2 Si3473 or Si3474 Daughter Card BOM

Designator	Qty	Value	PCB Footprint	Mfr	Mfr Part Number
C1, C2, C3, C4, C5, C6, C7, C8, C9, C10, C12	11	0.1 µF	C0603	Venkel	C0603X7R101-104K
C13, C14	2	0.1 µF	C0603	Venkel	C0603X7R160-104M
C11	1	10 µF	C0603	Venkel	C0603X5R100-106K
D1, D2, D3, D4, D5, D6, D7, D8	8	SMAJ58A	DO-214AC	Littelfuse	SMAJ58A
JS1, JS2, JS3, JS4	4	Jumper Shunt	Shunt	Samtec	SNT-100-BK-T
J1	1	Header 8 x 2	CONN2X8	Samtec	TSW-108-07-S-D
J2	1	Header 1 x 16	CONN-1X16	Samtec	TSW-116-07-T-S
J3	1	Header 4 x 3	CONN3X4	Samtec	TSW-104-07-G-T
PCB1	1	Si347x-DC-EB REV 1.2	N/A	Skyworks, Inc.	Si347x-DC-EB REV 1.2
Q1, Q2, Q3, Q4, Q5, Q6, Q7, Q8	8	PSMN040	LFPAK33	Nexperia	PSMN040-100MSE
R1, R2, R3, R4, R5, R6, R7, R8	8	0.2	R0805	Venkel	LCR0805-R200F
R9	1	0	R0603	Panasonic	ERJ-3GEY0R00V
TPV1, TPV2, TPV3, TPV4, TPV5, TPV6, TPV7, TPV8	8	TPV	TP-VIA	N/A	N/A
U1	1	Si3473B or Si3474B	QFN56M8X8P0.5E6.7	Skyworks, Inc.	Si3473B-A01-GM or Si3474B-A01-GM

5.3 Si3472 Daughter Card BOM

Designator	Qty	Value	PCB Footprint	Mfr	Mfr Part Number
C1, C2, C3, C4, C5, C6,C10	7	0.1 µF	C0603	Venkel	C0603X7R101-104K
C7	1	10 µF	C0603 | C0603L	Venkel	C0603X5R100-106K
C8, C9	2	0.1 µF	C0603	Venkel	C0603X7R160-104M
D1, D2, D3, D4	4	SMAJ58A	DO-214AC	Littelfuse	SMAJ58A
J1	1	Header 8 x 2	CONN2X8	Samtec	TSW-108-07-S-D
J2	1	Header 1 x 16	CONN-1X16	Samtec	TSW-116-07-T-S
JP1	1	Header 3 x 3	CONN3X3	Samtec	TSW-103-12-F-T
JS1, JS2, JS3	3	Jumper Shunt	N/A [SHUNT]	Samtec	SNT-100-BK-T
PCB1	1	Si3472DC-EVB Rev 2.0	N/A	Skyworks, Inc.	Si3472DC-EVB REV 2.0
Q1, Q2, Q3, Q4	4	PSMN040	LFPAK33	Nexperia	PSMN040-100MSE
R1, R2, R3, R4	4	0.2	R0805	Venkel	LCR0805-R200F
R5	1	0	R0603 | R0603L	Panasonic	ERJ-3GEY0R00V
U1	1	Si3472B	QFN38M5X7P0.5E3.7X5.7	Skyworks, Inc.	Si3472B-A01-IM

5.4 4-Pair Connector Board BOM

Designator	Qty	Value	PCB Footprint	Mfr	Mfr Part Number
D1	1	Green	LED-0805-K	Lite On, Inc.	LTST-C170GKT
JP1, JP2, JP3, JP4, JP5, JP6, JP7, JP8	8	Header 1 x 3	CONN-1X3	Samtec	TSW-103-07-T-S
JS1, JS2, JS3, JS4, JS5, JS6, JS7, JS8	8	Jumper Shunt	Shunt	Samtec	SNT-100-BK-T
J1	1	RJ-45	RJ45-8PORT	Molex	44170-0001
MH1, MH2, MH3, MH4	5	4–40	MH-125NP	Richco Plastic Co.	NSS-4-4-01
PCB1	1	PoE-BT-CB Rev 2.0	N/A	Skyworks, Inc.	PoE-BT-CB REV 2.0
R1	1	330 Ω	R0603	Venkel	CR0603-16W-3300F
SO1, SO2, SO3, SO4, SO5	5	STANDOFF		SPC Technology	2397
TP1, TP2, TP3, TP4, TP5, TP6, TP7, TP8	8	Black	Testpoint	Kobiconn	151-203-RC
U1	1	Conn Socket 10x2 2 mm RA	CONN2X10-2MM-SKT-RA	Samtec	SQT-110-01-F-D-RA

5.5 2-Pair Connector Board BOM

Designator	Qty	Value	PCB Footprint	Mfr	Mfr Part Number
D1	1	Green	LED-0805-K	Lite On, Inc.	LTST-C170GKT
J1	1	RJ-45	RJ45-8PORT	Molex	44170-0001
JP1, JP2, JP3, JP4, JP5, JP6, JP7, JP8	8	Header 1 x 3	CONN-1X3	Samtec	TSW-103-07-T-S
JS1, JS2, JS3, JS4, JS5, JS6, JS7, JS8	8	Jumper Shunt	N/A [Shunt]	Samtec	SNT-100-BK-T
MH1, MH2, MH3, MH4	5	4-40	MH-125NP	Richco Plastic Co.	NSS-4-4-01
PCB1	1	PoE-BT-2P-CB REV 1.0	N/A	Skyworks, Inc.	PoE-BT-2P-CB REV 1.0
R1	1	330	R0603	Venkel	CR0603-16W-3300F
SO1, SO2, SO3, SO4, SO5	5	STANDOFF		SPC Technology	2397
TP1, TP2, TP3, TP4, TP5, TP6, TP7, TP8	8	Black	Testpoint	Kobiconn	151-203-RC
U1	1	Conn Socket 10x2 2 mm RA	CONN2X10-2MM-SKT-RA	Samtec	SQT-110-01-F-D-RA

6. Sifos Test Reports

The following tables show the test results of the Sifos Technologies 802.3bt Conformance Test Suite version 5.2.22, report version 5.2.11, run on the Sifos PSA-3000 hardware.

Table 6.1. Si3472 PSE Conformance Test Suite

	PSA-3000 Ports		Min	Max	Average	Low Limit	P/F	High Limit	P/F
	1-1	Units							
Test: det_v									
Open_Circuit_Det_Voc=	8.28	volts	8.28	8.28	8.28	2.8	Pass	30	Pass
Peak_Det_Vvalid=	7.76	volts	7.76	7.76	7.8	3.8	Pass	10	Pass
Min_Det_Vvalid=	3.94	volts	3.94	3.94	3.9	2.8	Pass	9	Pass
Det_Volt_Step_dVtest=	3.82	volts	3.82	3.82	3.8	1	Pass	7.2	Pass
Detection_Slew=	0.005	V/usec	0.005	0.005	0.005	0	Pass	0.1	Pass
Good_Sig_Det_Pulse=	2	edges	2	2	2	1	Pass	9	Pass
Backoff_Voltage=	0.1	volts	0.1	0.1	0.1	0	Pass	2.8	Pass
Non_802_Step_V=	0	volts	0	0	0	0	Pass	0.1	Pass
High_Sig_MaxV=	7.88	volts	7.88	7.88	7.9	3.8	Pass	11	Pass
Non_802_Discr_?=	0	****	0	0	0	0	Pass	0	Pass
Detect_Strategy=	0	****	0	0	0	0	Pass	2	Pass
Test: det_i									
Init_Current_Isc=	1.07	mA	1.07	1.07	1.07	0	Pass	5	Pass
Det_Current_Isc=	0.44	mA	0.44	0.44	0.44	0	Pass	5	Pass
Test: det_range									
Rgood_Max=	30	kΩ	30	30	30	26	Pass	32	Pass
Rgood_Min=	17	kΩ	17	17	17	16	Pass	19	Pass
Rmid_det=	30	kΩ	30	30	30	26	Pass	33	Pass
Cgood_Max=	0.1	uF	0.1	0.1	0.1	0	Pass	10	Pass
Rbad_Cbad_Stat=	0	****	0	0	0	0	Pass	0	Pass
Test: det_time									
Backoff_Time_Tdbo=	535	msec	535	535	535	-1	Pass	1500	Pass
Eff_Backoff_Tdbo_eff=	535	msec	535	535	535	-1	Pass	1500	Pass
Backoff_Type=	0	****	0	0	0	0	Pass	0	Pass
Detection_Time_Tdet=	164	msec	164	164	164	5	Pass	500	Pass
Total_Det_Time=	168	msec	168	168	168	5	Pass	1000	Pass
Test: det_rsource									
Regulated_Vstep_Zout=	0	kΩ	0	0	0	-0.1	Pass	12	Pass
Test: class_v									

	PSA-3000 Ports		Min	Max	Average	Low Limit	P/F	High Limit	P/F
	1-1	Units							
Class_Voltage_Vclass=	17.4	volts	17.4	17.4	17.4	15.5	Pass	20.5	Pass
Vclass_Min=	17.3	volts	17.3	17.3	17.3	15.5	Pass	20.5	Pass
Mark_Voltage_Vmark=	9.1	volts	9.1	9.1	9.1	7	Pass	10	Pass
Mark_Voltage_Min=	9.1	volts	9.1	9.1	9.1	7	Pass	10	Pass
Class_Reset_V=	-1	volts	-1	-1	-1	-1	Pass	2.8	Pass
Test: class_time									
Event_Count=	2	****	2	2	2	2	Pass	3	Pass
Event1_Tlce=	97.5	msec	97.5	97.5	97.5	88	Pass	105	Pass
Event2_Tcle2=	9	msec	9	9	9	5.6	Pass	20.4	Pass
Mark_Tme1=	8.6	msec	8.6	8.6	8.6	5.6	Pass	12.4	Pass
Mark_Tme2=	9	msec	9	9	9	5.6	Pass	376	Pass
Class_Reset_Time=	10000	msec	10000	10000	10000	15	Pass	10000	Pass
Class_Probe_Events=	0	****	0	0	0	0	Pass	3	Pass
Test: class_err									
Class_lim=	84	mA	84	84	84	51	Pass	100	Pass
Pwr_Cl_lim=	0	****	0	0	0	0	Pass	0	Pass
Pwr_Cl_55=	0	****	0	0	0	0	Pass	0	Pass
Mark_lim=	6	mA	6	6	6	5	Pass	100	Pass
Pwr_Cl_Uneven=	0	****	0	0	0	0	Pass	0	Pass
Treset=	23	msec	23	23	23	15	Pass	10000	Pass
Test: pwrup_time									
Pwr-On_Rise_Time_Trise=	116	usec	116	116	116	15	Pass	50000	Pass
Power-On_Time_Tpon=	125	msec	125	125	125	0	Pass	400	Pass
Test: pwrup_inrush									
Init_Iinrush=	409.75	mA	409.75	409.75	409.8	400	Pass	450	Pass
Max_Iinrush_c4=	408.75	mA	408.75	408.75	408.8	400	Pass	450	Pass
Min_Iinrush=	408.25	mA	408.25	408.25	408.3	400	Pass	450	Pass
Tinrush=	65	msec	65	65	65	50	Pass	75	Pass
Inrush_45m=	56	Volts	56	56	56	50	Pass	57	Pass
Inrush_Voltage=	30.7	Volts	30.7	30.7	30.7	30	Pass	57	Pass
Max_Init_Inrush=	501.8	mA	501.8	501.8	501.8	0	Pass	2000	Pass
Inrush_Strategy_c4=	0	****	0	0	0	0	Pass	0	Pass
Test: pwron_v									
Vport_min_2=	55.5	V	55.5	55.5	55.5	50	Pass	57	Pass
Vport_max_2=	56.1	V	56.1	56.1	56.1	50	Pass	57	Pass
Vport_ripple_2=	6	mVpp	6	6	6	0	Pass	500	Pass

	PSA-3000 Ports		Min	Max	Average	Low Limit	P/F	High Limit	P/F
	1-1	Units							
Vport_noise_2=	8	mVpp	8	8	8	0	Pass	200	Pass
Vtrans_min_2=	55.4	V	55.4	55.4	55.4	50	Pass	57	Pass
Vtrans_max_2=	56.1	V	56.1	56.1	56.1	50	Pass	57	Pass
Test: pwron_pwrcap									
Pcon_c4=	30.7	watts	30.7	30.7	30.7	28.7	Pass	38.9	Pass
Icon_%_c4=	106.3	%	106.3	106.3	106.3	100	Pass	9999	Pass
Type-2_Enable=	1	****	1	1	1	1	Pass	1	Pass
Test: pwron_maxi									
Ilim_Peak=	115.3	mA	115.3	115.3	115.3	0	Pass	1750	Pass
Ilim_Min_2=	685.5	mA	685.5	685.5	685.5	683	Pass	1750	Pass
Tlim_Min_2=	60.9	msec	60.9	60.9	60.9	10	Pass	9999	Pass
Tlim_Max_2=	67.2	msec	67.2	67.2	67.2	0	Pass	75	Pass
Vlim_2=	55.3	V	55.3	55.3	55.3	50	Pass	57	Pass
Ilim_Max_2=	950	mA	950	950	950	0	Pass	1750	Pass
Ilim_Low_V_Tol_2=	60.9	msec	60.9	60.9	60.9	10	Pass	9999	Pass
Ktran_lo_2=	110.5	%	110.5	110.5	110.5	92.4	Pass	115	Pass
Test: pwron_overld									
%Ipeak_2=	125	%	125	125	125	100	Pass	125	Pass
Vport_Ipeak_2=	55.4	V	55.4	55.4	55.4	50	Pass	57	Pass
Vport_5%DC_2=	55.4	V	55.4	55.4	55.4	50	Pass	57	Pass
Test: mps_dc_valid									
Min_Valid_Time_Tmps=	6	msec	6	6	6	1	Pass	6	Pass
Duty_Cycle_tol=	1	****	1	1	1	1	Pass	1	Pass
Test: mps_dc_pwrdn									
Min_Valid_I_hold=	7	mA	7	7	7	4	Pass	9	Pass
Time-to-Shutdown_Tmpdo=	363	msec	363	363	363	320	Pass	400	Pass
Max_Voltage_Vopen_max=	4.3	volts	4.3	4.3	4.3	-1	Pass	30	Pass
Test: pwrdn_overld									
Icut_2=	567	mA	567	567	567	-1	Pass	1750	Pass
Tcut_2=	66.4	msec	66.4	66.4	66.4	10	Pass	9999	Pass
Isoft_2=	-1	mA	-1	-1	-1	-1	Pass	683	Pass
Tsoft_2=	-1	msec	-1	-1	-1	-1	Pass	2000	Pass
Test: pwrdn_time									
Turn-Off_Time_Toff=	38.7	mSec	38.7	38.7	38.7	0	Pass	500	Pass
Output_Cap_Cout=	0.0598	uF	0.0598	0.0598	0.06	-1	Pass	0.52	Pass
Output_Load_Rp=	745	kΩ	745	745	745	45	Pass	50000	Pass

	PSA-3000 Ports		Min	Max	Average	Low Limit	P/F	High Limit	P/F
	1-1	Units							
Test: pwrdn_v									
Avg_Idle_Voff=	0.1	VDC	0.1	0.1	0.1	0	Pass	2.8	Pass
Error_Delay_Ted=	1648.4	msec	1648.4	1648.4	1648	750	Pass	10000	Pass
Peak_Error_Delay_Ved=	0.1	VDC	0.1	0.1	0.1	0	Pass	20.5	Pass
Test Port Model Number:	3202								
Test Port Hardware Version:	8								
Test Port Firmware Version:	4.17 lc19								

Table 6.2. Si3473 PSE Conformance Test Suite

	PSA-3000 Ports		Min	Max	Average	Low Limit	P/F	High Limit	P/F
	1-1	Units							
Test: det_v									
Open_Circuit_Det_Voc=	8.78	volts	8.78	8.78	8.78	2.8	Pass	30	Pass
Peak_Det_Vvalid=	8.26	volts	8.26	8.26	8.3	3.8	Pass	10	Pass
Min_Det_Vvalid=	4.17	volts	4.17	4.17	4.2	2.8	Pass	9	Pass
Det_Volt_Step_dVtest=	4.09	volts	4.09	4.09	4.1	1	Pass	7.2	Pass
Detection_Slew=	0.007	V/usec	0.007	0.007	0.007	0	Pass	0.1	Pass
Good_Sig_Det_Pulse=	2	edges	2	2	2	1	Pass	9	Pass
Backoff_Voltage=	0.1	volts	0.1	0.1	0.1	0	Pass	2.8	Pass
Non_802_Step_V=	0	volts	0	0	0	0	Pass	0.1	Pass
High_Sig_MaxV=	8.39	volts	8.39	8.39	8.4	3.8	Pass	11	Pass
Non_802_Discr_?=	0	****	0	0	0	0	Pass	0	Pass
Detect_Strategy=	0	****	0	0	0	0	Pass	2	Pass
Test: det_i									
Init_Current_Isc=	1.35	mA	1.35	1.35	1.35	0	Pass	5	Pass
Det_Current_Isc=	0.71	mA	0.71	0.71	0.71	0	Pass	5	Pass
Test: det_range									
Rgood_Max=	30	kΩ	30	30	30	26	Pass	32	Pass
Rgood_Min=	16	kΩ	16	16	16	16	Pass	19	Pass
Rmid_det=	30	kΩ	30	30	30	26	Pass	33	Pass
Cgood_Max=	0.1	uF	0.1	0.1	0.1	0	Pass	10	Pass
Rbad_Cbad_Stat=	0	****	0	0	0	0	Pass	0	Pass
Test: det_time									
Backoff_Time_Tdbo=	555	msec	555	555	555	-1	Pass	1500	Pass
Eff_Backoff_Tdbo_eff=	555	msec	555	555	555	-1	Pass	1500	Pass
Backoff_Type=	0	****	0	0	0	0	Pass	0	Pass
Detection_Time_Tdet=	168	msec	168	168	168	5	Pass	500	Pass
Total_Det_Time=	170	msec	170	170	170	5	Pass	1000	Pass
Test: det_rsource									
Regulated_Vstep_Zout=	0	kΩ	0	0	0	-0.1	Pass	12	Pass
Test: class_v									
Class_Voltage_Vclass=	17.3	volts	17.3	17.3	17.3	15.5	Pass	20.5	Pass
Vclass_Min=	17.2	volts	17.2	17.2	17.2	15.5	Pass	20.5	Pass
Mark_Voltage_Vmark=	9.6	volts	9.6	9.6	9.6	7	Pass	10	Pass
Mark_Voltage_Min=	9.6	volts	9.6	9.6	9.6	7	Pass	10	Pass

	PSA-3000 Ports		Min	Max	Average	Low Limit	P/F	High Limit	P/F
	1-1	Units							
Class_Reset_V=	-1	volts	-1	-1	-1	-1	Pass	2.8	Pass
Test: class_time									
Event_Count=	2	****	2	2	2	2	Pass	3	Pass
Event1_Tlce=	97.9	msec	97.9	97.9	97.9	88	Pass	105	Pass
Event2_Tcle2=	9	msec	9	9	9	5.6	Pass	20.4	Pass
Mark_Tme1=	8.6	msec	8.6	8.6	8.6	5.6	Pass	12.4	Pass
Mark_Tme2=	9	msec	9	9	9	5.6	Pass	376	Pass
Class_Reset_Time=	10000	msec	10000	10000	10000	15	Pass	10000	Pass
Class_Probe_Events=	0	****	0	0	0	0	Pass	3	Pass
Test: class_err									
Class_lim=	89	mA	89	89	89	51	Pass	100	Pass
Pwr_Cl_lim=	0	****	0	0	0	0	Pass	0	Pass
Pwr_Cl_55=	0	****	0	0	0	0	Pass	0	Pass
Mark_lim=	6	mA	6	6	6	5	Pass	100	Pass
Pwr_Cl_Uneven=	0	****	0	0	0	0	Pass	0	Pass
Treset=	23	msec	23	23	23	15	Pass	10000	Pass
Test: pwrup_time									
Pwr-On_Rise_Time_Trise=	49	usec	49	49	49	15	Pass	50000	Pass
Power-On_Time_Tpon=	125	msec	125	125	125	0	Pass	400	Pass
Test: pwrup_inrush									
Init_Iinrush=	427	mA	427	427	427	400	Pass	450	Pass
Max_Iinrush_c4=	426.25	mA	426.25	426.25	426.3	400	Pass	450	Pass
Min_Iinrush=	425.25	mA	425.25	425.25	425.3	400	Pass	450	Pass
Tinrush=	65.4	msec	65.4	65.4	65.4	50	Pass	75	Pass
Inrush_45m=	56	Volts	56	56	56	50	Pass	57	Pass
Inrush_Voltage=	31.4	Volts	31.4	31.4	31.4	30	Pass	57	Pass
Max_Init_Inrush=	561.5	mA	561.5	561.5	561.5	0	Pass	2000	Pass
Inrush_Strategy_c4=	0	****	0	0	0	0	Pass	0	Pass
Test: pwron_v									
Vport_min_2=	55.5	V	55.5	55.5	55.5	50	Pass	57	Pass
Vport_max_2=	56.1	V	56.1	56.1	56.1	50	Pass	57	Pass
Vport_ripple_2=	6	mVpp	6	6	6	0	Pass	500	Pass
Vport_noise_2=	9	mVpp	9	9	9	0	Pass	200	Pass
Vtrans_min_2=	55.4	V	55.4	55.4	55.4	50	Pass	57	Pass
Vtrans_max_2=	56.1	V	56.1	56.1	56.1	50	Pass	57	Pass
Test: pwron_pwrcap									

	PSA-3000 Ports		Min	Max	Average	Low Limit	P/F	High Limit	P/F
	1-1	Units							
Pcon_c4=	30.7	watts	30.7	30.7	30.7	28.7	Pass	38.9	Pass
Icon_%_c4=	106.3	%	106.3	106.3	106.3	100	Pass	9999	Pass
Type-2_Enable=	1	****	1	1	1	1	Pass	1	Pass
Test: pwron_maxi									
Ilim_Peak=	114.8	mA	114.8	114.8	114.8	0	Pass	1750	Pass
Ilim_Min_2=	685.5	mA	685.5	685.5	685.5	683	Pass	1750	Pass
Tlim_Min_2=	63.7	msec	63.7	63.7	63.7	10	Pass	9999	Pass
Tlim_Max_2=	69.1	msec	69.1	69.1	69.1	0	Pass	75	Pass
Vlim_2=	55.3	V	55.3	55.3	55.3	50	Pass	57	Pass
Ilim_Max_2=	950	mA	950	950	950	0	Pass	1750	Pass
Ilim_Low_V_Tol_2=	62.9	msec	62.9	62.9	62.9	10	Pass	9999	Pass
Ktran_lo_2=	110.4	%	110.4	110.4	110.4	92.4	Pass	115	Pass
Test: pwron_overld									
%Ipeak_2=	125	%	125	125	125	100	Pass	125	Pass
Vport_Ipeak_2=	55.4	V	55.4	55.4	55.4	50	Pass	57	Pass
Vport_5%DC_2=	55.4	V	55.4	55.4	55.4	50	Pass	57	Pass
Test: mps_dc_valid									
Min_Valid_Time_Tmps=	6	msec	6	6	6	1	Pass	6	Pass
Duty_Cycle_tol=	1	****	1	1	1	1	Pass	1	Pass
Test: mps_dc_pwrdn									
Min_Valid_I_hold=	7	mA	7	7	7	4	Pass	9	Pass
Time-to-Shutdown_Tmpdo=	362	msec	362	362	362	320	Pass	400	Pass
Max_Voltage_Vopen_max=	0.1	volts	0.1	0.1	0.1	-1	Pass	30	Pass
Test: pwrdn_overld									
Icut_2=	567	mA	567	567	567	-1	Pass	1750	Pass
Tcut_2=	61.2	msec	61.2	61.2	61.2	10	Pass	9999	Pass
Isoft_2=	-1	mA	-1	-1	-1	-1	Pass	683	Pass
Tsoft_2=	-1	msec	-1	-1	-1	-1	Pass	2000	Pass
Test: pwrdn_time									
Turn-Off_Time_Toff=	46.7	mSec	46.7	46.7	46.7	0	Pass	500	Pass
Output_Cap_Cout=	0.0741	uF	0.0741	0.0741	0.07	-1	Pass	0.52	Pass
Output_Load_Rp=	681.1	kΩ	681.1	681.1	681	45	Pass	50000	Pass
Test: pwrdn_v									
Avg_Idle_Voff=	0.1	VDC	0.1	0.1	0.1	0	Pass	2.8	Pass
Error_Delay_Ted=	1242.2	msec	1242.2	1242.2	1242	750	Pass	10000	Pass
Peak_Error_Delay_Ved=	0.1	VDC	0.1	0.1	0.1	0	Pass	20.5	Pass

	PSA-3000 Ports		Min	Max	Average	Low Limit	P/F	High Limit	P/F
	1-1	Units							
Test Port Model Number:	3202								
Test Port Hardware Version:	8								
Test Port Firmware Version:	4.17 lc19								

Table 6.3. Si3474 PSE Conformance Test Suite

	PSA-3000 Ports		Min	Max	Average	Low Limit	P/F	High Limit	P/F
	1-1	Units							
Test: det_v									
Open_Circuit_Voc_A=	8.8	volts	8.8	8.8	8.8	0	Pass	30	Pass
Open_Circuit_Voc_B=	8.8	volts	8.8	8.8	8.8	0	Pass	30	Pass
Backoff_Voltage_A=	0.1	volts	0.1	0.1	0.1	0	Pass	2.8	Pass
Backoff_Voltage_B=	0.1	volts	0.1	0.1	0.1	0	Pass	2.8	Pass
Backoff_Voltage_Ss=	0.1	volts	0.1	0.1	0.1	0	Pass	2.8	Pass
Max_Det_Step_V_A=	8.29	volts	8.29	8.29	8.29	3.8	Pass	10	Pass
Max_Det_Step_V_B=	8.27	volts	8.27	8.27	8.27	3.8	Pass	10	Pass
Min_Det_Step_V_A=	4.13	volts	4.13	4.13	4.13	2.8	Pass	9	Pass
Min_Det_Step_V_B=	4.12	volts	4.12	4.12	4.12	2.8	Pass	9	Pass
Det_Step_Changes_A=	2	****	2	2	2	1	Pass	9	Pass
Det_Step_Changes_B=	2	****	2	2	2	1	Pass	9	Pass
Min_Step_DV_A=	4.08	volts	4.08	4.08	4.08	1	Pass	7.2	Pass
Min_Step_DV_B=	4.08	volts	4.08	4.08	4.08	1	Pass	7.2	Pass
Pre-Det_CC_Step_V_A=	0	volts	0	0	0	0	Pass	10	Pass
Pre-Det_CC_Step_V_B=	0	volts	0	0	0	0	Pass	10	Pass
Test: det_cc									
Presumed_CC_DET_SEQ=	1	****	1	1	1	0	Pass	3	Pass
Conn_Chk_SS_V_A=	7.6	volts	7.6	7.6	7.6	2.8	Pass	10	Pass
Conn_Chk_SS_V_B=	4.43	volts	4.43	4.43	4.43	2.8	Pass	10	Pass
Conn_Chk_DS_V_A=	7.62	volts	7.62	7.62	7.62	2.8	Pass	10	Pass
Conn_Chk_DS_V_B=	4.14	volts	4.14	4.14	4.14	2.8	Pass	10	Pass
High_Signature_CC_A=	1	****	1	1	1	1	Pass	1	Pass
High_Signature_CC_B=	1	****	1	1	1	1	Pass	1	Pass
4Pair_Start_Fail=	0	****	0	0	0	0	Pass	0	Pass
Test: det_i									
Isc_Init_A=	3.1	mA	3.1	3.1	3.1	0	Pass	5	Pass
Isc_Init_B=	3.56	mA	3.56	3.56	3.56	0	Pass	5	Pass
Isc_Det_A=	3.1	mA	3.1	3.1	3.1	0	Pass	5	Pass
Isc_Det_B=	3.56	mA	3.56	3.56	3.56	0	Pass	5	Pass
Det_Slew_A=	0.062	V/usec	0.062	0.062	0.062	0	Pass	0.1	Pass
Det_Slew_B=	0.0712	V/usec	0.0712	0.0712	0.0712	0	Pass	0.1	Pass
Test: det_range									
Rgood_Max_Single=	30	kΩ	30	30	30	27	Pass	32	Pass

	PSA-3000 Ports		Min	Max	Average	Low Limit	P/F	High Limit	P/F
	1-1	Units							
Rgood_Min_Single=	17	kΩ	17	17	17	16	Pass	19	Pass
Cgood_Max_Single=	0.1	uF	0.1	0.1	0.1	0	Pass	10	Pass
Rgood_Max_Dual_A=	30	kΩ	30	30	30	27	Pass	32	Pass
Rgood_Max_Dual_B=	30	kΩ	30	30	30	27	Pass	32	Pass
Rgood_Min_Dual_A=	17	kΩ	17	17	17	16	Pass	19	Pass
Rgood_Min_Dual_B=	17	kΩ	17	17	17	16	Pass	19	Pass
Cgood_Max_Dual_A=	0.1	uF	0.1	0.1	0.1	0	Pass	10	Pass
Cgood_Max_Dual_B=	0.1	uF	0.1	0.1	0.1	0	Pass	10	Pass
Test: det_time									
Detect_Time_Tdet_A=	136.7	msec	136.7	136.7	136.7	0	Pass	500	Pass
Detect_Time_Tdet_B=	138.7	msec	138.7	138.7	138.7	0	Pass	500	Pass
Backoff_Time_SS=	322.3	msec	322.3	322.3	322.3	15	Pass	9999	Pass
Backoff_Time_DS=	668	msec	668	668	668	15	Pass	9999	Pass
Det2Det_Time=	41	msec	41	41	41	0	Pass	400	Pass
Test: det_rsource									
PSE_Detect_Source=	0	****	0	0	0	0	Pass	1	Pass
PSE_Source_Zout_A=	0	kΩ	0	0	0	45	Pass	300	Pass
PSE_Source_Zout_B=	0	kΩ	0	0	0	45	Pass	300	Pass
Test: cc_response									
Single_Sig_Response=	1	****	1	1	1	1	Pass	1	Pass
Dual_Sig_Response=	1	****	1	1	1	1	Pass	1	Pass
2Pair_PD_A=	1	****	1	1	1	0	Pass	1	Pass
2Pair_PD_B=	1	****	1	1	1	0	Pass	1	Pass
Test: class_v									
Vclass_max_SS=	18.2	volts	18.2	18.2	18.2	15.5	Pass	20.5	Pass
Vclass_min_SS=	17.1	volts	17.1	17.1	17.1	15.5	Pass	20.5	Pass
Vmark_SS=	9.5	volts	9.5	9.5	9.5	7	Pass	10	Pass
Vreset_SS=	0	volts	0	0	0	-1	Pass	2.8	Pass
Vclass_max_DSA=	18.2	volts	18.2	18.2	18.2	15.5	Pass	20.5	Pass
Vclass_max_DSB=	18.2	volts	18.2	18.2	18.2	15.5	Pass	20.5	Pass
Vclass_min_DSA=	17.1	volts	17.1	17.1	17.1	15.5	Pass	20.5	Pass
Vclass_min_DSB=	17	volts	17	17	17	15.5	Pass	20.5	Pass
Vmark_DSA=	9.6	volts	9.6	9.6	9.6	7	Pass	10	Pass
Vmark_DSB=	9.5	volts	9.5	9.5	9.5	7	Pass	10	Pass
Vreset_DSA=	0	volts	0	0	0	-1	Pass	2.8	Pass
Vreset_DSB=	0	volts	0	0	0	-1	Pass	2.8	Pass

	PSA-3000 Ports		Min	Max	Average	Low Limit	P/F	High Limit	P/F
	1-1	Units							
Test: class_time									
Class_Probe_SS=	1	****	1	1	1	0	Pass	1	Pass
EV_Count_7_SS=	5	Events	5	5	5	1	Pass	5	Pass
Long_EV1_Time_SS=	101.5	msec	101.5	101.5	101.5	88	Pass	105	Pass
Min_Class_EV_Time_SS=	7.8	msec	7.8	7.8	7.8	6	Pass	20	Pass
Max_Class_EV_Time_SS=	15.7	msec	15.7	15.7	15.7	6	Pass	20	Pass
Min_Mark_EV_Time_SS=	7.8	msec	7.8	7.8	7.8	6	Pass	12	Pass
Max_Mark_EV_Time_SS=	9.8	msec	9.8	9.8	9.8	6	Pass	12	Pass
Final_Mark_EV_Time_SS=	11.7	msec	11.7	11.7	11.7	6	Pass	256	Pass
Cl_Prb_Reset_Time_SS=	23.4	msec	23.4	23.4	23.4	15	Pass	10000	Pass
Class_Probe_DA=	1	****	1	1	1	0	Pass	1	Pass
EV_Count_5D_DA=	4	Events	4	4	4	1	Pass	4	Pass
Long_EV1_Time_DA=	101.5	msec	101.5	101.5	101.5	88	Pass	105	Pass
Min_Class_EV_Time_DA=	7.8	msec	7.8	7.8	7.8	6	Pass	20	Pass
Max_Class_EV_Time_DA=	15.6	msec	15.6	15.6	15.6	6	Pass	20	Pass
Min_Mark_EV_Time_DA=	7.8	msec	7.8	7.8	7.8	6	Pass	12	Pass
Max_Mark_EV_Time_DA=	9.8	msec	9.8	9.8	9.8	6	Pass	12	Pass
Final_Mark_EV_Time_DA=	7.8	msec	7.8	7.8	7.8	6	Pass	256	Pass
Cl_Prb_Reset_Time_DA=	23.4	msec	23.4	23.4	23.4	15	Pass	10000	Pass
Class_Probe_DB=	1	****	1	1	1	0	Pass	1	Pass
EV_Count_5D_DB=	4	Events	4	4	4	1	Pass	4	Pass
Long_EV1_Time_DB=	101.5	msec	101.5	101.5	101.5	88	Pass	105	Pass
Min_Class_EV_Time_DB=	7.8	msec	7.8	7.8	7.8	6	Pass	20	Pass
Max_Class_EV_Time_DB=	13.6	msec	13.6	13.6	13.6	6	Pass	20	Pass
Min_Mark_EV_Time_DB=	7.8	msec	7.8	7.8	7.8	6	Pass	12	Pass
Max_Mark_EV_Time_DB=	9.8	msec	9.8	9.8	9.8	6	Pass	12	Pass
Final_Mark_EV_Time_DB=	7.8	msec	7.8	7.8	7.8	6	Pass	256	Pass
Cl_Prb_Reset_Time_DB=	23.4	msec	23.4	23.4	23.4	15	Pass	10000	Pass
Test: class_response									
Class_3_Count=	1	****	1	1	1	1	Pass	1	Pass
Class_4_Count=	3	****	3	3	3	1	Pass	3	Pass
Class_5_Count=	4	****	4	4	4	1	Pass	4	Pass
Class_6_Count=	4	****	4	4	4	1	Pass	4	Pass
Class_7_Count=	5	****	5	5	5	1	Pass	5	Pass
Class_8_Count=	5	****	5	5	5	1	Pass	5	Pass
Class_2D_Count_A=	1	****	1	1	1	1	Pass	3	Pass

	PSA-3000 Ports		Min	Max	Average	Low Limit	P/F	High Limit	P/F
	1-1	Units							
Class_2D_Count_B=	1	****	1	1	1	1	Pass	3	Pass
Class_3D_Count_A=	1	****	1	1	1	1	Pass	3	Pass
Class_3D_Count_B=	1	****	1	1	1	1	Pass	3	Pass
Class_4D_Count_A=	3	****	3	3	3	1	Pass	3	Pass
Class_4D_Count_B=	3	****	3	3	3	1	Pass	3	Pass
Class_5D_Count_A=	4	****	4	4	4	1	Pass	4	Pass
Class_5D_Count_B=	4	****	4	4	4	1	Pass	4	Pass
Max_SS_Class=	8	****	8	8	8	3	Pass	8	Pass
Max_DS_Class=	5	****	5	5	5	1	Pass	5	Pass
Init_Grant_Match=	1	****	1	1	1	1	Pass	1	Pass
2-Pair_Pairset=	1	****	1	1	1	0	Pass	2	Pass
PRI_4pr_Pairset=	12	****	12	12	12	1	Pass	12	Pass
Test: class_err									
Class_Ilim_A=	86.8	mA	86.8	86.8	86.8	51	Pass	100	Pass
Class_Ilim_B=	86.1	mA	86.1	86.1	86.1	51	Pass	100	Pass
Pwr_Cl_52_SS=	0	****	0	0	0	0	Pass	0	Pass
Pwr_Cl_52_DSA=	0	****	0	0	0	0	Pass	0	Pass
Pwr_Cl_52_DSB=	0	****	0	0	0	0	Pass	0	Pass
Class_Reset_SS=	1	****	1	1	1	1	Pass	1	Pass
Class_Reset_DS=	1	****	1	1	1	1	Pass	1	Pass
Mark_Ilim_A=	86	mA	86	86	86	0	Pass	105	Pass
Mark_Ilim_B=	84	mA	84	84	84	0	Pass	105	Pass
Inval_Sig_EV2_SS=	1	****	1	1	1	0	Pass	1	Pass
Inval_Sig_EV4_SS=	0	****	0	0	0	0	Pass	1	Pass
Inval_Sig_EV5_SS=	0	****	0	0	0	0	Pass	1	Pass
Inval_Sig_EV2_DSA=	1	****	1	1	1	0	Pass	1	Pass
Inval_Sig_EV2_DSB=	1	****	1	1	1	0	Pass	1	Pass
Inval_Sig_EV4_DSA=	1	****	1	1	1	0	Pass	1	Pass
Inval_Sig_EV4_DSB=	1	****	1	1	1	0	Pass	1	Pass
Test: pwrup_time									
Pwr_On_Time_Tpon_SS=	331.3	msec	331.3	331.3	331.3	144	Pass	400	Pass
Pwr_On_Time_Tpon_DSA=	311.7	msec	311.7	311.7	311.7	144	Pass	400	Pass
Pwr_On_Time_Tpon_DSB=	311.7	msec	311.7	311.7	311.7	144	Pass	400	Pass
Pwrup_Rise_Time_A=	98	usec	98	98	98	15	Pass	50000	Pass
Pwrup_Rise_Time_B=	98	usec	98	98	98	15	Pass	50000	Pass
Pwr_Stagger_Time_SS4=	70.8	msec	70.8	70.8	70.8	-1	Pass	75	Pass

	PSA-3000 Ports		Min	Max	Average	Low Limit	P/F	High Limit	P/F
	1-1	Units							
Pwr_Stagger_Time_SS5=	0	msec	0	0	0	0	Pass	75	Pass
Pwr_Stagger_Time_DS=	352.9	msec	352.9	352.9	352.9	0	Pass	1000	Pass
Test: pwrup_inrush									
Iinrush_min_Class_3=	419	mA	419	419	419	400	Pass	9999	Pass
Iinrush_min_Class_5=	836.5	mA	836.5	836.5	836.5	400	Pass	9999	Pass
Iinrush_min_Class_7=	836.5	mA	836.5	836.5	836.5	800	Pass	9999	Pass
Iinrush_min_Class_1D_A=	419.5	mA	419.5	419.5	419.5	400	Pass	9999	Pass
Iinrush_min_Class_1D_B=	414.5	mA	414.5	414.5	414.5	400	Pass	9999	Pass
Iinrush_4P_max_Class_3=	419.5	mA	419.5	419.5	419.5	0	Pass	450	Pass
Iinrush_4P_max2_Class_5=	837.4	mA	837.4	837.4	837.4	0	Pass	900	Pass
Iinrush_4P_max2_Class_7=	837.3	mA	837.3	837.3	837.3	0	Pass	900	Pass
Iinrush_2P_max_Class_3=	415.2	mA	415.2	415.2	415.2	0	Pass	450	Pass
Iinrush_2P_max2_Class_7=	421	mA	421	421	421	0	Pass	600	Pass
Iinrush_2p_max_Cl_1D_A=	420.1	mA	420.1	420.1	420.1	0	Pass	450	Pass
Iinrush_2p_max_Cl_1D_B=	415.2	mA	415.2	415.2	415.2	0	Pass	450	Pass
Tinrush_minPr_Class_3=	70.5	msec	70.5	70.5	70.5	50	Pass	75	Pass
Tinrush_maxPr_Class_3=	70.5	msec	70.5	70.5	70.5	50	Pass	75	Pass
Tinrush_minPr_Class_7=	70.5	msec	70.5	70.5	70.5	50	Pass	75	Pass
Tinrush_maxPr_Class_7=	70.9	msec	70.9	70.9	70.9	50	Pass	75	Pass
Tinrush_Class_1D_A=	73.25	msec	73.25	73.25	73.3	50	Pass	75	Pass
Tinrush_Class_1D_B=	73.25	msec	73.25	73.25	73.3	50	Pass	75	Pass
Delay_Inrush_Class_7=	70.5	msec	70.5	70.5	70.5	50	Pass	75	Pass
Delay_Inrush_Class_2D_A=	73.63	msec	73.63	73.63	73.6	50	Pass	75	Pass
Delay_Inrush_Class_2D_B=	73.63	msec	73.63	73.63	73.6	50	Pass	75	Pass
45ms_Pwr_Stat_Class_7=	1	****	1	1	1	1	Pass	1	Pass
45ms_Pwr_Stat_Class_2D_A=	1	****	1	1	1	1	Pass	1	Pass
45ms_Pwr_Stat_Class_2D_B=	1	****	1	1	1	1	Pass	1	Pass
Vinrush_Class_2D_A=	31.3	volts	31.3	31.3	31.3	30	Pass	60	Pass
Vinrush_Class_2D_B=	31	volts	31	31	31	30	Pass	60	Pass
Iinrush_16V_DS3A=	310.5	mA	310.5	310.5	310.5	60	Pass	450	Pass
Iinrush_16V_DS3B=	281.75	mA	281.75	281.75	281.8	60	Pass	450	Pass
Test: pwron_v									
Vpse_Max_Alt_A=	56.08	V	56.08	56.08	56.08	52	Pass	57	Pass
Vpse_Max_Alt_B=	56.1	V	56.1	56.1	56.1	52	Pass	57	Pass
Vpse_Min_Alt_A=	55.17	V	55.17	55.17	55.17	52	Pass	57	Pass
Vpse_Min_Alt_B=	55.15	V	55.15	55.15	55.15	52	Pass	57	Pass

	PSA-3000 Ports		Min	Max	Average	Low Limit	P/F	High Limit	P/F
	1-1	Units							
Vport_PSE_diff=	20	mV	20	20	20	0	Pass	195	Pass
V_ripple_A=	8	mVp-p	8	8	8	0	Pass	500	Pass
V_ripple_B=	7	mVp-p	7	7	7	0	Pass	500	Pass
V_noise_A=	5	mVp-p	5	5	5	0	Pass	200	Pass
V_noise_B=	11	mVp-p	11	11	11	0	Pass	200	Pass
V_trans_A=	55.14	V	55.14	55.14	55.14	52	Pass	57	Pass
V_trans_B=	55.09	V	55.09	55.09	55.09	52	Pass	57	Pass
Test: pwron_pwrcap									
Max_Asgn_Class_SS=	8	****	8	8	8	1	Pass	8	Pass
Pcon_c1=	4.4	W	4.4	4.4	4.4	3.9	Pass	99	Pass
Icon_%_c1=	112.5	%	112.5	112.5	112.5	100	Pass	125	Pass
Pcon_c2=	7.5	W	7.5	7.5	7.5	3.9	Pass	99	Pass
Icon_%_c2=	112.5	%	112.5	112.5	112.5	100	Pass	125	Pass
Pcon_c3=	15.5	W	15.5	15.5	15.5	3.9	Pass	99	Pass
Icon_%_c3=	112.7	%	112.7	112.7	112.7	100	Pass	125	Pass
Pcon_c4=	30.3	W	30.3	30.3	30.3	3.9	Pass	99	Pass
Icon_%_c4=	112.3	%	112.3	112.3	112.3	100	Pass	125	Pass
Pcon_c5=	45.8	W	45.8	45.8	45.8	3.9	Pass	99	Pass
Icon_%_c5=	104.3	%	104.3	104.3	104.3	100	Pass	125	Pass
Pcon_c6=	60.2	W	60.2	60.2	60.2	3.9	Pass	99	Pass
Icon_%_c6=	104.1	%	104.1	104.1	104.1	100	Pass	125	Pass
Pcon_c7=	75.7	W	75.7	75.7	75.7	3.9	Pass	99	Pass
Icon_%_c7=	103.8	%	103.8	103.8	103.8	100	Pass	125	Pass
Pcon_c8=	90	W	90	90	90	3.9	Pass	99	Pass
Icon_%_c8=	103.6	%	103.6	103.6	103.6	100	Pass	125	Pass
Type_N_Enable=	1	****	1	1	1	1	Pass	1	Pass
Pclass_2p_c5=	-1	****	-1	-1	-1	1	Pass	1	Pass
Pclass_LLDP_95%=	1	****	1	1	1	1	Pass	1	Pass
Pclass_LLDP_75%=	1	****	1	1	1	1	Pass	1	Pass
Max_Asgn_Class_DS=	5	****	5	5	5	1	Pass	5	Pass
Pcon_c1DA=	4	W	4	4	4	3.9	Pass	99	Pass
Icon_%_c1DA=	102.6	%	102.6	102.6	102.6	100	Pass	125	Pass
Pcon_c2DB=	7.1	W	7.1	7.1	7	3.9	Pass	99	Pass
Icon_%_c2DB=	107.1	%	107.1	107.1	107.1	100	Pass	125	Pass
Pcon_c3DA=	15.4	W	15.4	15.4	15	3.9	Pass	99	Pass
Icon_%_c3DA=	112	%	112	112	112	100	Pass	125	Pass

	PSA-3000 Ports		Min	Max	Average	Low Limit	P/F	High Limit	P/F
	1-1	Units							
Pcon_c4DB=	30.3	W	30.3	30.3	30	3.9	Pass	99	Pass
Icon_%_c4DB=	104.9	%	104.9	104.9	104.9	100	Pass	125	Pass
Pcon_c5DA=	45.1	W	45.1	45.1	45	3.9	Pass	99	Pass
Icon_%_c5DA=	104.3	%	104.3	104.3	104.3	100	Pass	125	Pass
Test: pwron_unbal									
pseP2pUnbal_c4A=	1	****	1	1	1	1	Pass	1	Pass
pseP2pUnbal_c4B=	1	****	1	1	1	1	Pass	1	Pass
pseP2pUnbal_c5A=	1	****	1	1	1	1	Pass	1	Pass
pseP2pUnbal_c5B=	1	****	1	1	1	1	Pass	1	Pass
pseP2pUnbal_c6A=	1	****	1	1	1	1	Pass	1	Pass
pseP2pUnbal_c6B=	1	****	1	1	1	1	Pass	1	Pass
pseP2pUnbal_c7A=	1	****	1	1	1	1	Pass	1	Pass
pseP2pUnbal_c7B=	1	****	1	1	1	1	Pass	1	Pass
pseP2pUnbal_c8A=	1	****	1	1	1	1	Pass	1	Pass
pseP2pUnbal_c8B=	1	****	1	1	1	1	Pass	1	Pass
pseP2pPkUnbal_A=	1	****	1	1	1	1	Pass	1	Pass
pseP2pPkUnbal_B=	1	****	1	1	1	1	Pass	1	Pass
Test: pwron_maxi									
Ilim_2p_max_SSA=	1263	mA	1263	1263	1263	0	Pass	1750	Pass
Ilim_2p_max_SSB=	1265	mA	1265	1265	1265	0	Pass	1750	Pass
Tlim_SS=	9.77	msec	9.77	9.77	9.8	6	Pass	75	Pass
Ilim_2p_max_DSA=	1263	mA	1263	1263	1263	0	Pass	1750	Pass
Ilim_2p_max_DSB=	1264.5	mA	1264.5	1264.5	1264.5	0	Pass	1750	Pass
Tlim_DSA=	9.77	msec	9.77	9.77	9.8	6	Pass	75	Pass
Tlim_DSB=	9.38	msec	9.38	9.38	9.4	6	Pass	75	Pass
Ilim_min_cAB3=	400	mA	400	400	400	400	Pass	1750	Pass
Max_trans_c3=	1	****	1	1	1	1	Pass	1	Pass
Ilim_min_cAB4=	684	mA	684	684	684	684	Pass	1750	Pass
Max_trans_c4=	1	****	1	1	1	1	Pass	1	Pass
Ilim_min_cAB5=	580	mA	580	580	580	580	Pass	1750	Pass
Max_trans_c5=	1	****	1	1	1	1	Pass	1	Pass
Ilim_min_cAB6=	720	mA	720	720	720	720	Pass	1750	Pass
Max_trans_c6=	1	****	1	1	1	1	Pass	1	Pass
Ilim_min_cAB7=	850	mA	850	850	850	850	Pass	1750	Pass
Max_trans_c7=	1	****	1	1	1	1	Pass	1	Pass
Ilim_min_cAB8=	1005	mA	1005	1005	1005	1005	Pass	1750	Pass

	PSA-3000 Ports		Min	Max	Average	Low Limit	P/F	High Limit	P/F
	1-1	Units							
Max_trans_c8=	1	****	1	1	1	1	Pass	1	Pass
Ilim_min_cAB3D=	400	mA	400	400	400	400	Pass	1750	Pass
Max_trans_c3D=	1	****	1	1	1	1	Pass	1	Pass
Ilim_min_cAB4D=	684	mA	684	684	684	684	Pass	1750	Pass
Max_trans_c4D=	1	****	1	1	1	1	Pass	1	Pass
Ilim_min_cAB5D=	990	mA	990	990	990	990	Pass	1750	Pass
Max_trans_c5D=	1	****	1	1	1	1	Pass	1	Pass
Vtrans_2p_A=	55.45	V	55.45	55.45	55.5	48.4	Pass	57	Pass
Vtrans_2p_B=	55.42	V	55.42	55.42	55.4	48.4	Pass	57	Pass
Iport_max_type4=	0	****	0	0	0	0	Pass	0	Pass
Ilps_type4=	0	****	0	0	0	0	Pass	0	Pass
Test: pwron_overId									
Ipeak_c1=	1	****	1	1	1	1	Pass	1	Pass
Ipeak_c2=	1	****	1	1	1	1	Pass	1	Pass
Ipeak_c3=	1	****	1	1	1	1	Pass	1	Pass
Vport_Ipeak_c3=	55.8	V	55.8	55.8	55.8	52	Pass	57	Pass
Ipeak_5%DC_c3=	1	****	1	1	1	1	Pass	1	Pass
Ipeak_c4=	1	****	1	1	1	1	Pass	1	Pass
Vport_Ipeak_c4=	55.75	V	55.75	55.75	55.8	52	Pass	57	Pass
Ipeak_5%DC_c4=	1	****	1	1	1	1	Pass	1	Pass
Ipeak_c5=	1	****	1	1	1	1	Pass	1	Pass
Vport_Ipeak_c5=	55.58	V	55.58	55.58	55.6	52	Pass	57	Pass
Ipeak_5%DC_c5=	1	****	1	1	1	1	Pass	1	Pass
Ipeak_c6=	1	****	1	1	1	1	Pass	1	Pass
Vport_Ipeak_c6=	55.4	V	55.4	55.4	55.4	52	Pass	57	Pass
Ipeak_5%DC_c6=	1	****	1	1	1	1	Pass	1	Pass
Ipeak_c7=	1	****	1	1	1	1	Pass	1	Pass
Vport_Ipeak_c7=	55.2	V	55.2	55.2	55.2	52	Pass	57	Pass
Ipeak_5%DC_c7=	1	****	1	1	1	1	Pass	1	Pass
Ipeak_c8=	1	****	1	1	1	1	Pass	1	Pass
Vport_Ipeak_c8=	55	V	55	55	55	52	Pass	57	Pass
Ipeak_5%DC_c8=	1	****	1	1	1	1	Pass	1	Pass
Ipeak_c1D=	1	****	1	1	1	1	Pass	1	Pass
Ipeak_c2D=	1	****	1	1	1	1	Pass	1	Pass
Ipeak_c3D=	1	****	1	1	1	1	Pass	1	Pass
Ipeak_c4D=	1	****	1	1	1	1	Pass	1	Pass

	PSA-3000 Ports		Min	Max	Average	Low Limit	P/F	High Limit	P/F
	1-1	Units							
Ipeak_c5D=	1	****	1	1	1	1	Pass	1	Pass
Test: mps_dc_valid									
Ihold_2p_c3A=	-1	mA	-1	-1	-1	4	Pass	9	Pass
Ihold_2p_c3B=	7	mA	7	7	7	4	Pass	9	Pass
Ihold_c5=	6	mA	6	6	6	4	Pass	14	Pass
Ihold_2p_c5A=	3	mA	3	3	3	2	Pass	7	Pass
Ihold_2p_c5B=	3	mA	3	3	3	2	Pass	7	Pass
Ihold_c7=	6	mA	6	6	6	4	Pass	14	Pass
Ihold_2p_c7A=	3	mA	3	3	3	2	Pass	7	Pass
Ihold_2p_c7B=	3	mA	3	3	3	2	Pass	7	Pass
Ihold_2p_c2DA=	3	mA	3	3	3	2	Pass	7	Pass
Ihold_2p_c2DB=	3	mA	3	3	3	2	Pass	7	Pass
LP_MPS_Tol_c3=	1	****	1	1	1	1	Pass	1	Pass
LP_MPS_Tol_c5=	1	****	1	1	1	1	Pass	1	Pass
LP_MPS_Tol_c7=	1	****	1	1	1	1	Pass	1	Pass
LP_MPS_Tol_c2D=	1	****	1	1	1	1	Pass	1	Pass
Test: mps_dc_pwrdn									
Tmpdo_c3A=	375	msec	375	375	375	320	Pass	400	Pass
Tmpdo_c3B=	-1	msec	-1	-1	-1	320	Pass	400	Pass
Tmpdo_c5A=	375	msec	375	375	375	320	Pass	400	Pass
Tmpdo_c5B=	375	msec	375	375	375	320	Pass	400	Pass
Tmpdo_c7A=	375	msec	375	375	375	320	Pass	400	Pass
Tmpdo_c7B=	375	msec	375	375	375	320	Pass	400	Pass
Tmpdo_c2DA=	376.9	msec	376.9	376.9	376.9	320	Pass	400	Pass
4pr_Stat_c2DA=	1	****	1	1	1	0	Pass	1	Pass
Tmpdo_c2DB=	376.9	msec	376.9	376.9	376.9	320	Pass	400	Pass
4pr_Stat_c2DB=	1	****	1	1	1	0	Pass	1	Pass
Test: pwrdn_time									
Turnoff_time_Toff_A=	37.8	msec	37.8	37.8	37.8	0	Pass	500	Pass
Turnoff_time_Toff_B=	33.7	msec	33.7	33.7	33.7	0	Pass	500	Pass
Cout_A=	61.1	nF	61.1	61.1	61.1	0	Pass	520	Pass
Cout_B=	47.9	nF	47.9	47.9	47.9	0	Pass	520	Pass
Output_Rp_A=	584	kΩ	584	584	584	45	Pass	9999	Pass
Output_Rp_B=	879	kΩ	879	879	879	45	Pass	9999	Pass
Idle_time_SS=	418	msec	418	418	418	15	Pass	9999	Pass
Test: pwrdn_v									

	PSA-3000 Ports		Min	Max	Average	Low Limit	P/F	High Limit	P/F
	1-1	Units							
Error_Delay_SS_A=	977	msec	977	977	977	750	Pass	9999	Pass
Error_Delay_SS_B=	801	msec	801	801	801	750	Pass	9999	Pass
Error_Delay_DS_A=	1348	msec	1348	1348	1348	750	Pass	9999	Pass
Error_Delay_DS_B=	801	msec	801	801	801	750	Pass	9999	Pass
Idle_Voff_SS_A=	0.1	V	0.1	0.1	0.1	0	Pass	2.8	Pass
Idle_Voff_SS_B=	0.1	V	0.1	0.1	0.1	0	Pass	2.8	Pass
Idle_Voff_DS_A=	0.1	V	0.1	0.1	0.1	0	Pass	2.8	Pass
Idle_Voff_DS_B=	0.1	V	0.1	0.1	0.1	0	Pass	2.8	Pass
Test Port Model Number:	3202								
Test Port Hardware Version:	8								
Test Port Firmware Version:	4.17 lc19								

7. Appendix

Earlier Si3474-KITs were shipped with PoE-BT-CB Rev 1.0 instead of PoE-BT-CB Rev 2.0. If the Si3474-KIT is shipped with PoE-BT-CB Rev 1.0, this section describes how to use the PoE-BT-CB Rev 1.0.

PoE-BT-CB Rev 1.0 has a schematic error. However, it is possible to work-around this error by ignoring the printed silk screen then using the PoE-BT-CB Rev 1.0 as shown in the following figures.

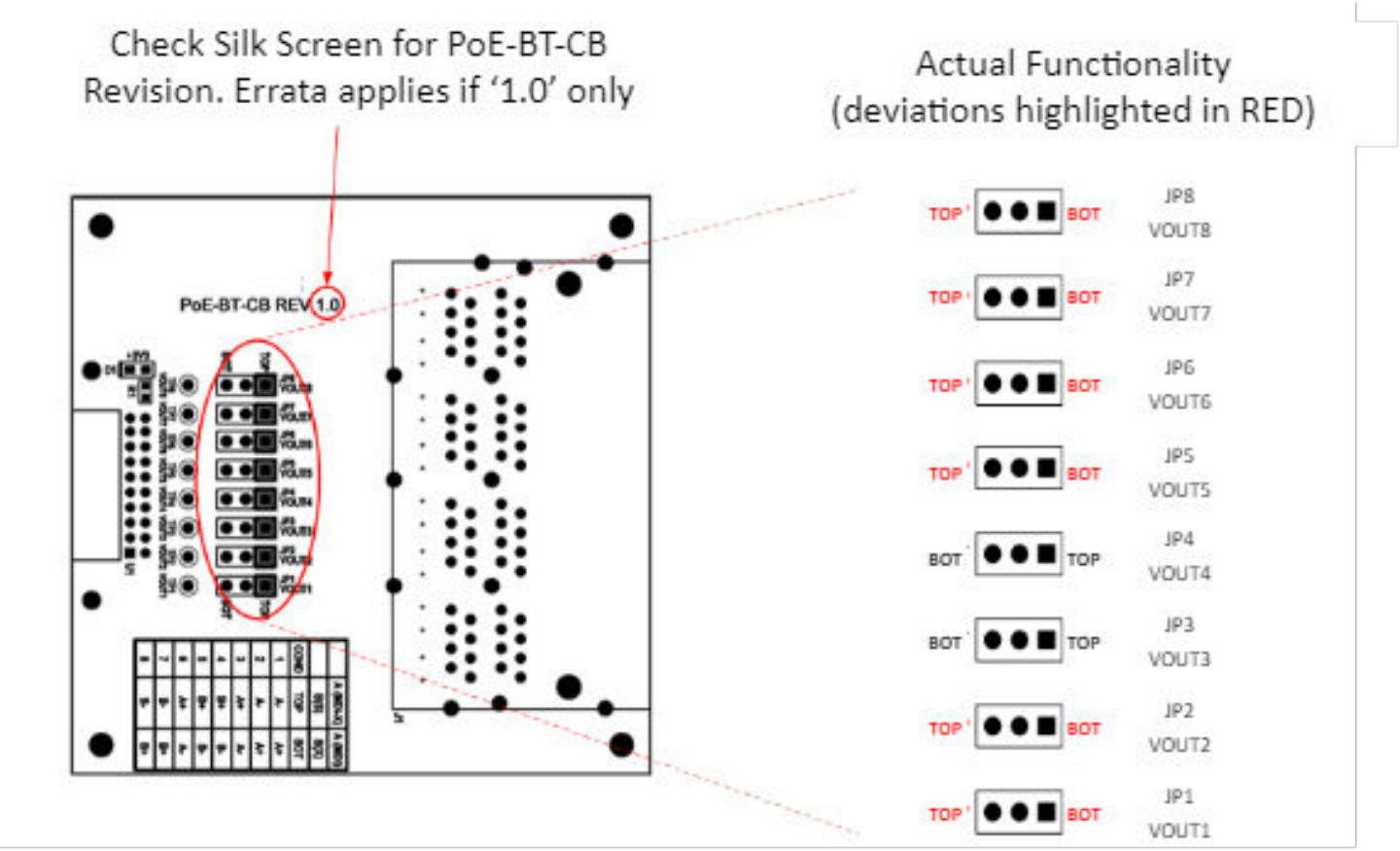

Figure 7.1. PoE-BT-CB Rev 1.0

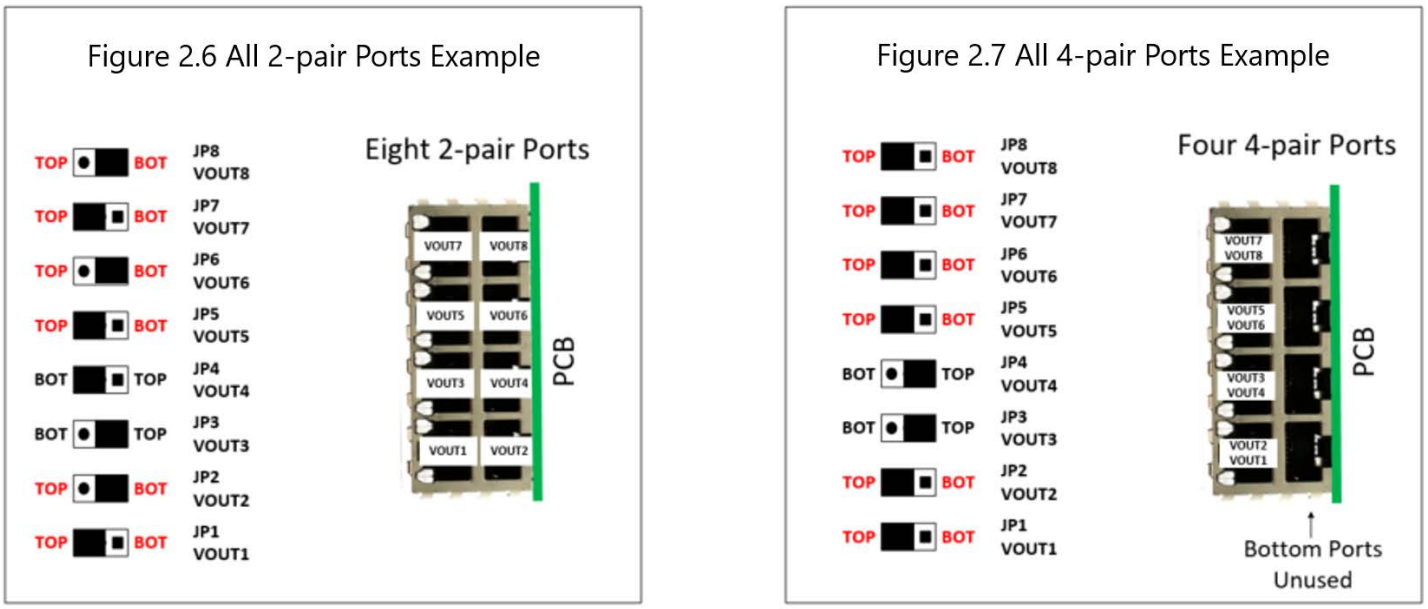

Figure 7.2. Replacement Figures for PoE-BT-CB Rev 1.0

SKYWORKS®

Connecting Everyone and Everything, All the Time



Portfolio
www.skyworksinc.com

Quality
www.skyworksinc.com/quality

Support & Resources
www.skyworksinc.com/support

Copyright © 2021 Skyworks Solutions, Inc. All Rights Reserved.

Information in this document is provided in connection with Skyworks Solutions, Inc. ("Skyworks") products or services. These materials, including the information contained herein, are provided by Skyworks as a service to its customers and may be used for informational purposes only by the customer. Skyworks assumes no responsibility for errors or omissions in these materials or the information contained herein. Skyworks may change its documentation, products, services, specifications or product descriptions at any time, without notice. Skyworks makes no commitment to update the materials or information and shall have no responsibility whatsoever for conflicts, incompatibilities, or other difficulties arising from any future changes.

No license, whether express, implied, by estoppel or otherwise, is granted to any intellectual property rights by this document. Skyworks assumes no liability for any materials, products or information provided hereunder, including the sale, distribution, reproduction or use of Skyworks products, information or materials, except as may be provided in Skyworks' Terms and Conditions of Sale.

THE MATERIALS, PRODUCTS AND INFORMATION ARE PROVIDED "AS IS" WITHOUT WARRANTY OF ANY KIND, WHETHER EXPRESS, IMPLIED, STATUTORY, OR OTHERWISE, INCLUDING FITNESS FOR A PARTICULAR PURPOSE OR USE, MERCHANTABILITY, PERFORMANCE, QUALITY OR NON-INFRINGEMENT OF ANY INTELLECTUAL PROPERTY RIGHT; ALL SUCH WARRANTIES ARE HEREBY EXPRESSLY DISCLAIMED. SKYWORKS DOES NOT WARRANT THE ACCURACY OR COMPLETENESS OF THE INFORMATION, TEXT, GRAPHICS OR OTHER ITEMS CONTAINED WITHIN THESE MATERIALS. SKYWORKS SHALL NOT BE LIABLE FOR ANY DAMAGES, INCLUDING BUT NOT LIMITED TO ANY SPECIAL, INDIRECT, INCIDENTAL, STATUTORY, OR CONSEQUENTIAL DAMAGES, INCLUDING WITHOUT LIMITATION, LOST REVENUES OR LOST PROFITS THAT MAY RESULT FROM THE USE OF THE MATERIALS OR INFORMATION, WHETHER OR NOT THE RECIPIENT OF MATERIALS HAS BEEN ADVISED OF THE POSSIBILITY OF SUCH DAMAGE.

Skyworks products are not intended for use in medical, lifesaving or life-sustaining applications, or other equipment in which the failure of the Skyworks products could lead to personal injury, death, physical or environmental damage. Skyworks customers using or selling Skyworks products for use in such applications do so at their own risk and agree to fully indemnify Skyworks for any damages resulting from such improper use or sale.

Customers are responsible for their products and applications using Skyworks products, which may deviate from published specifications as a result of design defects, errors, or operation of products outside of published parameters or design specifications. Customers should include design and operating safeguards to minimize these and other risks. Skyworks assumes no liability for applications assistance, customer product design, or damage to any equipment resulting from the use of Skyworks products outside of Skyworks' published specifications or parameters.

Skyworks, the Skyworks symbol, Sky5®, SkyOne®, SkyBlue™, Skyworks Green™, Clockbuilder®, DSPLL®, ISOmodem®, ProSLIC®, and SiPHY® are trademarks or registered trademarks of Skyworks Solutions, Inc. or its subsidiaries in the United States and other countries. Third-party brands and names are for identification purposes only and are the property of their respective owners. Additional information, including relevant terms and conditions, posted at www.skyworksinc.com, are incorporated by reference.

Skyworks Solutions, Inc. | Nasdaq: SWKS | sales@skyworksinc.com | www.skyworksinc.com
USA: 781-376-3000 | Asia: 886-2-2735 0399 | Europe: 33 (0)1 43548540 |