GlobTek, Inc.
www.globtek.com
186 Veterans Drive,
Northvale, NJ 07647
Tel. (201) 784-1000
Fax (201) 784-0111

Drawing Title: GTM43007-B6048-FW, ICT / ITE / Medical Power Supply, Efficiency Level: N/A, Case Color/Style: PCB, Open Frame/Internal, Regulated Switchmode AC-DC Power Supply AC Adaptor, Input Rating: 100-240V~, 50-60Hz, Molex Header (or equal) , Output Rating: 60W, 48.0V@1.25A, Output Configuration: N/A mm, N/A/4 Cond, , Molex 2.54mm Pitch 4-Pin Header PN: 22-11-2042 MATES W/ PN: 22-01-2047 or Equivalent, Ferrite: None, N/A, GT Cord # C0127, Pin Out: Pins 1 and 2: +V, Pins 3 and 4: -V, Blades/Input Cord: Not Applicable, Approvals: CB 62368; ETL 62368; EAC; UKCA; Conforms to 62368-1; CCC; Book 60601; CB 60601-1 2MOPP (6W max); CE; China RoHS; Double Insulation; RoHS; Ukraine; WEEE; CE; FCC; LPS 60950; Level V; Fuse 60335; CB 60950; CB EN/IEC 60335-1; cETLus ES60601; cETLus; cETLus 60601-1 3rd; Fuse 60335; WDaE;	
Model No. GTM43007-B6048-FW	
Part No./Ordering No. GTM43007-B6048-FW(R)	Rev D1

In Addition to GlobTek Inc.'s renewed ISO9001:2015 - Quality Management System Certification, GlobTek Inc. is now certified to:

ISO13485:2016 - Medical Devices Quality Management System Certification
ISO14001:2015 - Environmental Management System Certification

ISO Certificates are available online at https://www.globtek.com/iso-certificates/

The acceptance of this specification and use of the product described in this document indicates the acceptance and binding of the customer to Globtek TERMS AND CONDITIONS (attached to the end of this document), which supersede all other agreements, terms, and conditions (https://en.globtek.com/terms-and-conditions/).

The purchaser of this product (Customer) agrees that it is their sole responsibility to determine suitability/fitness of the product described in this specification for their application and to take precautions for protection against any hazards attendant to the handling and use of the product.

Footnote:

GlobTek Inc. will not be liable for the safety and performance of these power supplies/battery packs if unauthorized access and repair occurs. End user should consult applicable UL, CSA or EN standards for proper installation instruction.

Limitation of Use:

GlobTek products are intended for use with commercial, medical, and/or industrial equipment only. GlobTek product are not authorized for use as mission critical components in life support hazardous environment, nuclear or aircraft applications without prior written approval from the CEO of GlobTek Inc.
Contents of this document are subject to change without prior notice.

Customer Approval of Specification:

Please approve, sign and send back to GlobTek so we can complete order processing.
A delay in receipt of this form will delay delivery schedule.

Company Name:	Customer P/N:
Quote Number:	Date:
Authorized Representative Name:	Authorized Representative Signature:

PROPRIETARY INFORMATION
PROPRIETARY OF GLOBTEK, INC. ANY REPRODUCTION, DISCLOSURE OR USE OF THIS DRAWING, IN WHOLE OR IN PART, IS HEREBY PROHIBITED EXCEPT AS SPECIFIED IN WRITING BY GLOBTEK, INC. © GlobTek, Inc. 2014 - 2022
guest /09/16/2022 4:23:29 AM

GlobTek, Inc.
www.globtek.com
186 Veterans Drive,
Northvale, NJ 07647
Tel. (201) 784-1000
Fax (201) 784-0111

Drawing Title: GTM43007-B6048-FW, ICT / ITE / Medical Power Supply, Efficiency Level: N/A, Case Color/Style: PCB, Open Frame/Internal, Regulated Switchmode AC-DC Power Supply AC Adaptor, Input Rating: 100-240V~, 50-60Hz, Molex Header (or equal) , Output Rating: 60W, 48.0V@1.25A, Output Configuration: N/A mm, N/A/4 Cond, , Molex 2.54mm Pitch 4-Pin Header PN: 22-11-2042 MATES W/ PN: 22-01-2047 or Equivalent, Ferrite: None, N/A, GT Cord # C0127, Pin Out: Pins 1 and 2: +V, Pins 3 and 4: -V, Blades/Input Cord: Not Applicable, Approvals: CB 62368; ETL 62368; EAC; UKCA; Conforms to 62368-1; CCC; Book 60601; CB 60601-1 2MOPP (6W max); CE; China RoHS; Double Insulation; RoHS; Ukraine; WEEE; CE; FCC; LPS 60950; Level V; Fuse 60335; CB 60950; CB EN/IEC 60335-1; cETLus ES60601; cETLus; cETLus 60601-1 3rd; Fuse 60335; WDaE;
Model No. GTM43007-B6048-FW
Part No./Ordering No. GTM43007-B6048-FW(R) — Rev D1

REVISION HISTORY

REV	DESCRIPTION	SUB	DATE	APPROVED
D1	Update label specs to ISO 15223 medical device compliant label, add UKCA, CCC approvals, update Ukraine, EAC Delete deviation note	QA	10/27/2020	QA
D	Update packing Qty from 84 to 90, add deviation	QA	07/01/2015	QA
C	Remove approvals 'Design to meet', LPS, add cETLus for 60950 and 60601, S-mark for 60950 and 60601, Nemko 60335, fuse, WDaE	QA	06/21/2015	QA
B	Update packing dimensions and Qty, identify I/P for pin 1 and O/P pinout drawing	QA	01/24/2015	QA
A	Initial Release	sorec	11/25/2014	QA

POWER SUPPLY INFORMATION

TYPE:	Open Frame/Internal
TECHNOLOGY:	Regulated Switchmode AC-DC Power Supply AC Adaptor
CASE COLOR:	PCB
NAMEPLATE RATED INPUT:	100-240V~, 50-60Hz, 1.5A
INPUT CONFIG:	Molex Header (or equal)
WATTS:	60.0
VOLTS OUT:	48.0
CURRENT OUT (Amps):	1.25
BLADE/CORD INCLUDED:	N/A Not Applicable
BLADE/CORD INSTALLED:	N/A :Not Applicable
INGRESS PROTECTION:	N/A
GROUNDING CONFIGURATION:	(F1) Class II / Double Insulated
EFFICIENCY LEVEL:	N/A
OUTPUT CONFIGURATION:	N/A mm, N/A/4 Cond, , Molex 2.54mm Pitch 4-Pin Header PN: 22-11-2042 MATES W/ PN: 22-01-2047 or Equivalent, Ferrite: None, N/A, GT Cord # C0127
OVERMOLDED:	No
CONNECTOR PIN OUT:	Pins 1 and 2: +V, Pins 3 and 4: -V
LABEL SPECS:	ISO 15223 medical device compliant label,L-1470
SPECIAL BARCODE LABEL MATERIAL:	No
PACK SPEC:	Packing GTM43007-BWWVV-F(W)
USER MANUAL:	

PROPRIETARY INFORMATION
PROPRIETARY OF GLOBTEK, INC. ANY REPRODUCTION, DISCLOSURE OR USE OF THIS DRAWING, IN WHOLE OR IN PART, IS HEREBY PROHIBITED EXCEPT AS SPECIFIED IN WRITING BY GLOBTEK, INC. © GlobTek, Inc. 2014 - 2022
guest /09/16/2022 4:23:29 AM

GlobTek, Inc.
www.globtek.com
186 Veterans Drive,
Northvale, NJ 07647
Tel. (201) 784-1000
Fax (201) 784-0111

Drawing Title: GTM43007-B6048-FW, ICT / ITE / Medical Power Supply, Efficiency Level: N/A, Case Color/Style: PCB, Open Frame/Internal, Regulated Switchmode AC-DC Power Supply AC Adaptor, Input Rating: 100-240V~, 50-60Hz, Molex Header (or equal) , Output Rating: 60W, 48.0V@1.25A, Output Configuration: N/A mm, N/A/4 Cond, , Molex 2.54mm Pitch 4-Pin Header PN: 22-11-2042 MATES W/ PN: 22-01-2047 or Equivalent, Ferrite: None, N/A, GT Cord # C0127, Pin Out: Pins 1 and 2: +V, Pins 3 and 4: -V, Blades/Input Cord: Not Applicable, Approvals: CB 62368; ETL 62368; EAC; UKCA; Conforms to 62368-1; CCC; Book 60601; CB 60601-1 2MOPP (6W max); CE; China RoHS; Double Insulation; RoHS; Ukraine; WEEE; CE; FCC; LPS 60950; Level V; Fuse 60335; CB 60950; CB EN/IEC 60335-1; cETLus ES60601; cETLus; cETLus 60601-1 3rd; Fuse 60335; WDaE;	
Model No. GTM43007-B6048-FW	
Part No./Ordering No. GTM43007-B6048-FW(R)	Rev D1

Notes/Modifications/Customizations (notes in this section supersede the values shown in the standard spec):

DIMENSIONS ARE IN MM UNLESS SPECIFIED OTHERWISE.

PROPRIETARY INFORMATION

PROPRIETARY OF GLOBTEK, INC. ANY REPRODUCTION, DISCLOSURE OR USE OF THIS DRAWING, IN WHOLE OR IN PART, IS HEREBY PROHIBITED EXCEPT AS SPECIFIED IN WRITING BY GLOBTEK, INC. © GlobTek, Inc. 2014 - 2022

guest /09/16/2022 4:23:29 AM

GlobTek, Inc.
www.globtek.com
186 Veterans Drive,
Northvale, NJ 07647
Tel. (201) 784-1000
Fax (201) 784-0111

Drawing Title: GTM43007-B6048-FW, ICT / ITE / Medical Power Supply, Efficiency Level: N/A, Case Color/Style: PCB, Open Frame/Internal, Regulated Switchmode AC-DC Power Supply AC Adaptor, Input Rating: 100-240V~, 50-60Hz, Molex Header (or equal) , Output Rating: 60W, 48.0V@1.25A, Output Configuration: N/A mm, N/A/4 Cond, , Molex 2.54mm Pitch 4-Pin Header PN: 22-11-2042 MATES W/ PN: 22-01-2047 or Equivalent, Ferrite: None, N/A, GT Cord # C0127, Pin Out: Pins 1 and 2: +V, Pins 3 and 4: -V, Blades/Input Cord: Not Applicable, Approvals: CB 62368; ETL 62368; EAC; UKCA; Conforms to 62368-1; CCC; Book 60601; CB 60601-1 2MOPP (6W max); CE; China RoHS; Double Insulation; RoHS; Ukraine; WEEE; CE; FCC; LPS 60950; Level V; Fuse 60335; CB 60950; CB EN/IEC 60335-1; cETLus ES60601; cETLus; cETLus 60601-1 3rd; Fuse 60335; WDaE;	
Model No. GTM43007-B6048-FW	
Part No./Ordering No. GTM43007-B6048-FW(R)	Rev D1

ELECTRICAL SPECIFICATIONS

A) ELECTRICAL SPECIFICATIONS:
01. Input Voltage: Specified 90-264 Vac, Nameplate rated: 100-240Vac
02. Input Frequency: Specified 47-63 Hz, Nameplate rated 50-60Hz
03. Output Regulation: +/- 3% measured at the output connector
04. Line Voltage Regulation: +/- 0.5% maximum measured at full load
05. Output Ripple (Vp-p): +/- 1% of output voltage, Vp-p, max
06. Turn-ON/OFF: 5% maximum,1 mS typical recovery time for 25% step load
07. Turn-ON Delay: 1 Sec max
08. Hold-Up Time:10 mS typical @ nominal input voltage and full load
09. Inrush Current: 80A maximum @ 115 Vac input, 160A maximum @ 230 Vac input
10. Switching Frequency: 65 KHz typical
11. Efficiency: 87% @115Vac, 89% @ 230Vac typical at full load
12. No Load Power: < 300mW @ 230Vac

B) PROTECTION
01. Overvoltage Protection: 110% to 130% of nominal output voltage, and less than 60Vdc
02. Short Circuit/Over-load: momentary short circuit protected, output will auto recover upon removal of short

C) SAFETY
01. Dielectric Withstand Voltage: 4000Vac / 5656Vdc from primary to secondary
02. Earth Leakage Current: Does not exceed 300uA in NORMAL CONDITION and 1000uA in SINGLE FAULT CONDITION
03. Output Leakage Current: Does not exceed 75uA NC(Normal condition) 300uA SFC(single fault condition)
05. Earth continuity test:<0.1 Ohm, Class I Only
06. Mode of operation: Continuous
07. Means of Protection: 2 x MOPP
08. Compliant Standards: See listings at end of this drawing for specifics

D) EMC
EN 60601-1-2, 4th edition
Emissions, per EN 55032, EN 61000-6-3, EN 61000-6-4
Conducted Emissions: Class B, FCC Part 15, Class B
Radiated Emissions: Class B, FCC Part 15, Class B
Line Frequency Harmonics EN61000-3-2, Class A
Voltage Fluctuations/Flicker EN61000-3-3

Immunity, per EN 55024, EN 61000-6-1, EN 61000-6-2
Static Discharge Immunity EN61000-4-2, 10kV Contact Discharge, 20kV air discharge
Radiated RF Immunity EN61000-4-3, 10V/m 80-1000MHz, 3V/m 1-2.7GHz, 80% 1KHz AM.
EFT/Burst Immunity EN61000-4-4, 4kV/100kHz.
Line Surge Immunity EN61000-4-5, 2kV differential, 4kV common-mode
Conducted RF Immunity EN61000-4-6, 3Vrms, 80% 1KHz AM
Power Frequency Magnetic Field Immunity EN61000-4-8, 3A/m
Voltage Dip Immunity EN61000-4-11, Criteria

E) OTHER

PROPRIETARY INFORMATION
PROPRIETARY OF GLOBTEK, INC. ANY REPRODUCTION, DISCLOSURE OR USE OF THIS DRAWING, IN WHOLE OR IN PART, IS HEREBY PROHIBITED EXCEPT AS SPECIFIED IN WRITING BY GLOBTEK, INC. © GlobTek, Inc. 2014 - 2022
guest /09/16/2022 4:23:29 AM

01. MTBF: 1,000,000 Hours @ 45°C ambient temperature, Full Load
02. Operating Temperature: -10°C to 45°C ambient temperature
03. Humidity: 0% to 95% relative humidity
04. Storage Temperature: -30°C to 80°C
05. Cooling: Convection
06: Elevation: 5000M
07. ROHS: Complies with EU 2011/65/EU amended by EU 2015/863 and China SJ/T 11363-2006

F) MECHANICAL FORMAT
01. Type: Open Frame
02. Size: A suffix version, (2”x3”), 76.2 x 50.8 x 30.5 mm
03. Size: B suffix version, (2”x4”), 101.6 x 50.8 x 30.5 mm
04. Size: C suffix version, (3”x5”), 127.0 x 76.2 x 30.5 mm

G) SPECIAL OPTIONS
01. Custom Label Markings
02. Short term Output Surge Capability
03. Reduced Leakage Current versions
04. Tightened output voltage tolerance
05. Reduced output ripple level
06. High Rel PCB laminate with Plated through Holes for IPC610 Class 2 Compliance
07. Low Temperature operation, down to -40°C
08. Quasi Constant Current Output, for Lead-Acid Battery Charger Applications
09. Special Input or Output Connectors
10. Over-Temperature Protection, Latched Shut-Down

TO ADDRESS SYSTEM-LEVEL EMI CONCERNS, FERRITE CHOKES/BEADS MAY BE ADDED/REVISED UPON REQUEST. A SAMPLE KIT OF GLOBTEK’S STANDARD FERRITES IS AVAILABLE UNDER GLOBTEK P/N: EMI-MITIGATION-KIT1

FOR ADDITIONAL INFORMATION, PLEASE READ OUR WHITE PAPER AT:
https://en.globtek.com/technical-articles/ferrite-kit-radiated-emi-suppression-kit-for-globtek-power-supplies-cable-assemblies

INGRESS PROTECTION: N/A

PROPRIETARY INFORMATION
PROPRIETARY OF GLOBTEK, INC. ANY REPRODUCTION, DISCLOSURE OR USE OF THIS DRAWING, IN WHOLE OR IN PART, IS HEREBY PROHIBITED EXCEPT AS SPECIFIED IN WRITING BY GLOBTEK, INC. © GlobTek, Inc. 2014 - 2022
guest /09/16/2022 4:23:29 AM

GlobTek, Inc. www.globtek.com 186 Veterans Drive, Northvale, NJ 07647 Tel. (201) 784-1000 Fax (201) 784-0111	Drawing Title: GTM43007-B6048-FW, ICT / ITE / Medical Power Supply, Efficiency Level: N/A, Case Color/Style: PCB, Open Frame/Internal, Regulated Switchmode AC-DC Power Supply AC Adaptor, Input Rating: 100-240V~, 50-60Hz, Molex Header (or equal) , Output Rating: 60W, 48.0V@1.25A, Output Configuration: N/A mm, N/A/4 Cond, , Molex 2.54mm Pitch 4-Pin Header PN: 22-11-2042 MATES W/ PN: 22-01-2047 or Equivalent, Ferrite: None, N/A, GT Cord # C0127, Pin Out: Pins 1 and 2: +V, Pins 3 and 4: -V, Blades/Input Cord: Not Applicable, Approvals: CB 62368; ETL 62368; EAC; UKCA; Conforms to 62368-1; CCC; Book 60601; CB 60601-1 2MOPP (6W max); CE; China RoHS; Double Insulation; RoHS; Ukraine; WEEE; CE; FCC; LPS 60950; Level V; Fuse 60335; CB 60950; CB EN/IEC 60335-1; cETLus ES60601; cETLus; cETLus 60601-1 3rd; Fuse 60335; WDaE;	
	Model No. GTM43007-B6048-FW	
	Part No./Ordering No. GTM43007-B6048-FW(R)	Rev D1

Drawing for the Low Voltage (Range 5-14V):

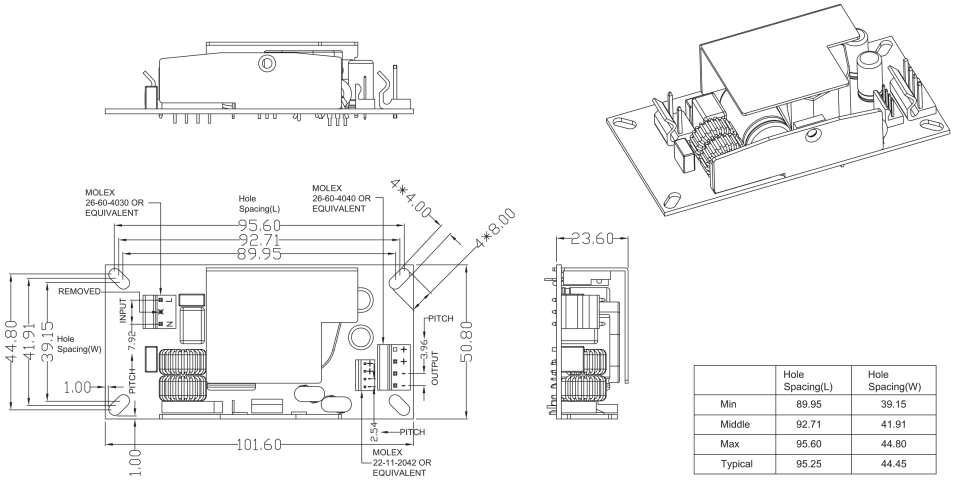

	Hole Spacing(L)	Hole Spacing(W)
Min	89.95	39.15
Middle	92.71	41.91
Max	95.60	44.80
Typical	95.25	44.45

Drawing for the High Voltage (Range 15-48V):

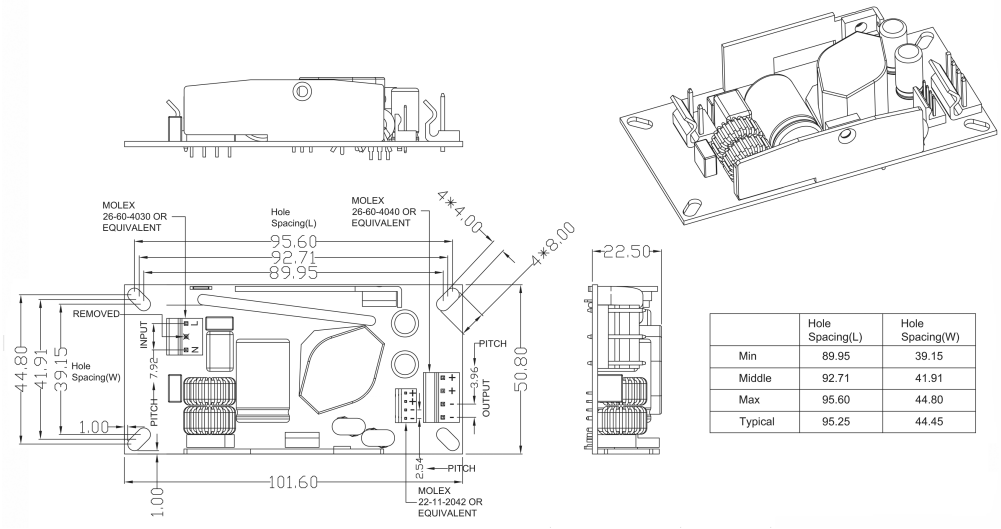

	Hole Spacing(L)	Hole Spacing(W)
Min	89.95	39.15
Middle	92.71	41.91
Max	95.60	44.80
Typical	95.25	44.45

PROPRIETARY INFORMATION
PROPRIETARY OF GLOBTEK, INC. ANY REPRODUCTION, DISCLOSURE OR USE OF THIS DRAWING, IN WHOLE OR IN PART, IS HEREBY PROHIBITED EXCEPT AS SPECIFIED IN WRITING BY GLOBTEK, INC. © GlobTek, Inc. 2014 - 2022
guest /09/16/2022 4:23:29 AM

GlobTek, Inc.
www.globtek.com
186 Veterans Drive,
Northvale, NJ 07647
Tel. (201) 784-1000
Fax (201) 784-0111

Drawing Title: GTM43007-B6048-FW, ICT / ITE / Medical Power Supply, Efficiency Level: N/A, Case Color/Style: PCB, Open Frame/Internal, Regulated Switchmode AC-DC Power Supply AC Adaptor, Input Rating: 100-240V~, 50-60Hz, Molex Header (or equal) , Output Rating: 60W, 48.0V@1.25A, Output Configuration: N/A mm, N/A/4 Cond, , Molex 2.54mm Pitch 4-Pin Header PN: 22-11-2042 MATES W/ PN: 22-01-2047 or Equivalent, Ferrite: None, N/A, GT Cord # C0127, Pin Out: Pins 1 and 2: +V, Pins 3 and 4: -V, Blades/Input Cord: Not Applicable, Approvals: CB 62368; ETL 62368; EAC; UKCA; Conforms to 62368-1; CCC; Book 60601; CB 60601-1 2MOPP (6W max); CE; China RoHS; Double Insulation; RoHS; Ukraine; WEEE; CE; FCC; LPS 60950; Level V; Fuse 60335; CB 60950; CB EN/IEC 60335-1; cETLus ES60601; cETLus; cETLus 60601-1 3rd; Fuse 60335; WDaE;	
Model No. GTM43007-B6048-FW	
Part No./Ordering No. GTM43007-B6048-FW(R)	Rev D1

PROPRIETARY INFORMATION
PROPRIETARY OF GLOBTEK, INC. ANY REPRODUCTION, DISCLOSURE OR USE OF THIS DRAWING, IN WHOLE OR IN PART, IS HEREBY PROHIBITED EXCEPT AS SPECIFIED IN WRITING BY GLOBTEK, INC. © GlobTek, Inc. 2014 - 2022
guest /09/16/2022 4:23:29 AM

GlobTek, Inc.
www.globtek.com
186 Veterans Drive,
Northvale, NJ 07647
Tel. (201) 784-1000
Fax (201) 784-0111

Drawing Title: GTM43007-B6048-FW, ICT / ITE / Medical Power Supply, Efficiency Level: N/A, Case Color/Style: PCB, Open Frame/Internal, Regulated Switchmode AC-DC Power Supply AC Adaptor, Input Rating: 100-240V~, 50-60Hz, Molex Header (or equal) , Output Rating: 60W, 48.0V@1.25A, Output Configuration: N/A mm, N/A/4 Cond, , Molex 2.54mm Pitch 4-Pin Header PN: 22-11-2042 MATES W/ PN: 22-01-2047 or Equivalent, Ferrite: None, N/A, GT Cord # C0127, Pin Out: Pins 1 and 2: +V, Pins 3 and 4: -V, Blades/Input Cord: Not Applicable, Approvals: CB 62368; ETL 62368; EAC; UKCA; Conforms to 62368-1; CCC; Book 60601; CB 60601-1 2MOPP (6W max); CE; China RoHS; Double Insulation; RoHS; Ukraine; WEEE; CE; FCC; LPS 60950; Level V; Fuse 60335; CB 60950; CB EN/IEC 60335-1; cETLus ES60601; cETLus; cETLus 60601-1 3rd; Fuse 60335; WDaE;

Model No. GTM43007-B6048-FW

Part No./Ordering No. GTM43007-B6048-FW(R) | Rev D1

DERATING CURVE

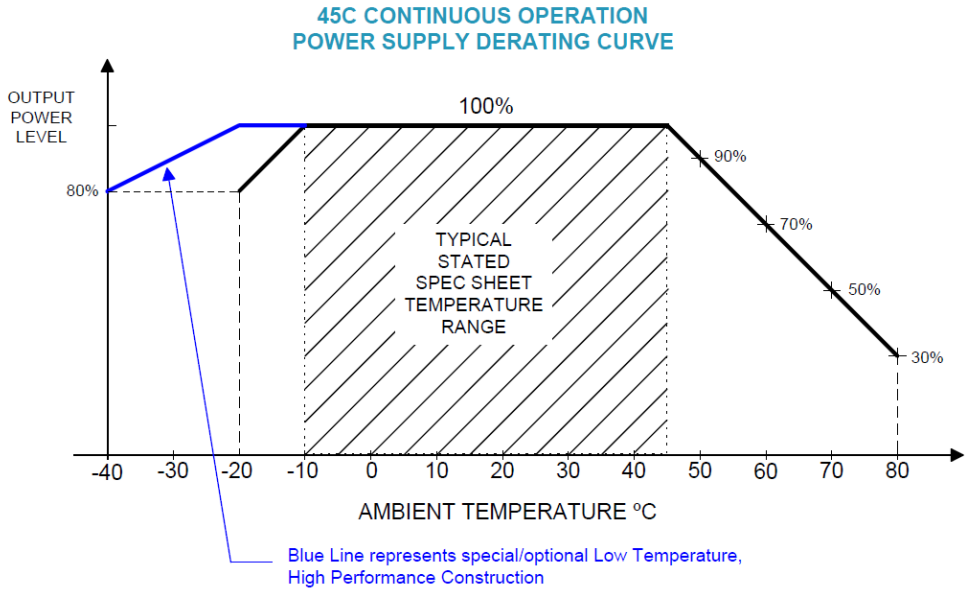

PROPRIETARY INFORMATION
PROPRIETARY OF GLOBTEK, INC. ANY REPRODUCTION, DISCLOSURE OR USE OF THIS DRAWING, IN WHOLE OR IN PART, IS HEREBY PROHIBITED EXCEPT AS SPECIFIED IN WRITING BY GLOBTEK, INC. © GlobTek, Inc. 2014 - 2022
guest /09/16/2022 4:23:29 AM

GlobTek, Inc.
www.globtek.com
186 Veterans Drive,
Northvale, NJ 07647
Tel. (201) 784-1000
Fax (201) 784-0111

Drawing Title: GTM43007-B6048-FW, ICT / ITE / Medical Power Supply, Efficiency Level: N/A, Case Color/Style: PCB, Open Frame/Internal, Regulated Switchmode AC-DC Power Supply AC Adaptor, Input Rating: 100-240V~, 50-60Hz, Molex Header (or equal) , Output Rating: 60W, 48.0V@1.25A, Output Configuration: N/A mm, N/A/4 Cond, , Molex 2.54mm Pitch 4-Pin Header PN: 22-11-2042 MATES W/ PN: 22-01-2047 or Equivalent, Ferrite: None, N/A, GT Cord # C0127, Pin Out: Pins 1 and 2: +V, Pins 3 and 4: -V, Blades/Input Cord: Not Applicable, Approvals: CB 62368; ETL 62368; EAC; UKCA; Conforms to 62368-1; CCC; Book 60601; CB 60601-1 2MOPP (6W max); CE; China RoHS; Double Insulation; RoHS; Ukraine; WEEE; CE; FCC; LPS 60950; Level V; Fuse 60335; CB 60950; CB EN/IEC 60335-1; cETLus ES60601; cETLus; cETLus 60601-1 3rd; Fuse 60335; WDaE;	
Model No. GTM43007-B6048-FW	
Part No./Ordering No. GTM43007-B6048-FW(R)	Rev D1

INPUT CONFIGURATION

(F1) Class II / Double Insulated

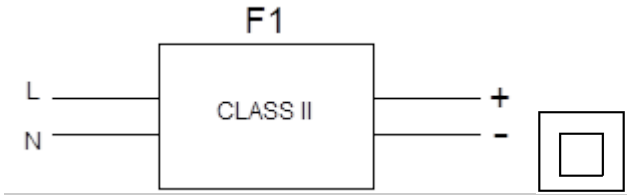

Alternate grounding configurations available upon request.

Blades/Cord Included:N/A:Not Applicable

Blades/Cord Installed:N/A:Not Applicable

Molex 26-60-4030 3 Position Header Pin 1: Line, Pin 2: Removed, PIN 3: Neutral

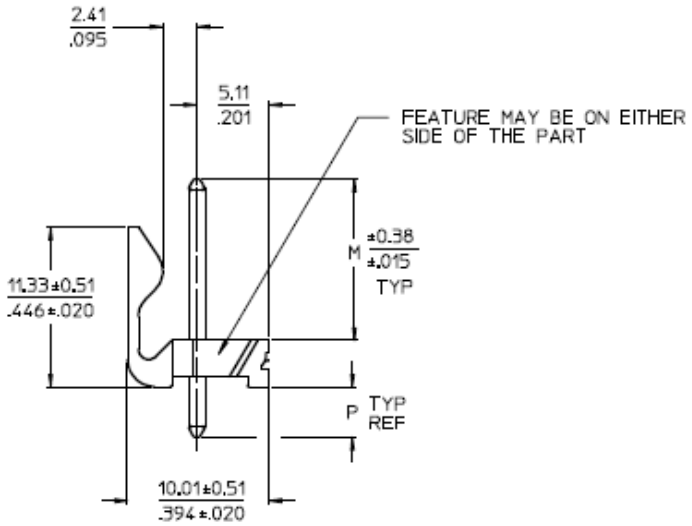

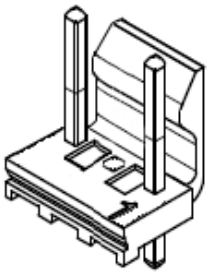

PROPRIETARY INFORMATION
PROPRIETARY OF GLOBTEK, INC. ANY REPRODUCTION, DISCLOSURE OR USE OF THIS DRAWING, IN WHOLE OR IN PART, IS HEREBY PROHIBITED EXCEPT AS SPECIFIED IN WRITING BY GLOBTEK, INC. © GlobTek, Inc. 2014 - 2022
guest /09/16/2022 4:23:29 AM



Optional Input Wiring Kits are available:

PN/Ordering No	Length	End A	End B
XHP410070M7MLX3(R)	70	JST XHP-4	Molex 09-93-0300
C810070M6MLX3(R)	60	IEC60320 C8	Molex 09-93-0300
C1410070M6MLX3(R)	60	IEC60320 C14	Molex 09-93-0300

Custom lengths, construction, cable types, ferrites, filters, and termination available upon request.

PROPRIETARY INFORMATION

PROPRIETARY OF GLOBTEK, INC. ANY REPRODUCTION, DISCLOSURE OR USE OF THIS DRAWING, IN WHOLE OR IN PART, IS HEREBY PROHIBITED EXCEPT AS SPECIFIED IN WRITING BY GLOBTEK, INC. © GlobTek, Inc. 2014 - 2022

guest /09/16/2022 4:23:29 AM

GlobTek, Inc.
www.globtek.com
186 Veterans Drive,
Northvale, NJ 07647
Tel. (201) 784-1000
Fax (201) 784-0111

Drawing Title: GTM43007-B6048-FW, ICT / ITE / Medical Power Supply, Efficiency Level: N/A, Case Color/Style: PCB, Open Frame/Internal, Regulated Switchmode AC-DC Power Supply AC Adaptor, Input Rating: 100-240V~, 50-60Hz, Molex Header (or equal) , Output Rating: 60W, 48.0V@1.25A, Output Configuration: N/A mm, N/A/4 Cond, , Molex 2.54mm Pitch 4-Pin Header PN: 22-11-2042 MATES W/ PN: 22-01-2047 or Equivalent, Ferrite: None, N/A, GT Cord # C0127, Pin Out: Pins 1 and 2: +V, Pins 3 and 4: -V, Blades/Input Cord: Not Applicable, Approvals: CB 62368; ETL 62368; EAC; UKCA; Conforms to 62368-1; CCC; Book 60601; CB 60601-1 2MOPP (6W max); CE; China RoHS; Double Insulation; RoHS; Ukraine; WEEE; CE; FCC; LPS 60950; Level V; Fuse 60335; CB 60950; CB EN/IEC 60335-1; cETLus ES60601; cETLus; cETLus 60601-1 3rd; Fuse 60335; WDaE;

Model No. GTM43007-B6048-FW

Part No./Ordering No. GTM43007-B6048-FW(R) | Rev D1

OUTPUT CORD AND CONNECTOR: MOLI/C0127

ACTUAL CONNECTORS, OVERMOLDS, FERRITES MAY VARY SLIGHTLY FROM THE PICTURE BELOW

CABLE TYPE	
CABLE LENGTH (mm)	N/A
CABLE TOLERANCE (mm)	N/A
WIRE GAUGE (AWG)	N/A
CONDUCTORS	4
HANK DIMENSION (mm)	N/A
CABLE / CONNECTOR OVERMOLD COLOR	N/A
FERRITE TYPE / DIMENSION	None
FERRITE # OF TURNS(Definition)	N/A
FERRITE DIMENSION FROM STRAIN RELIEF	N/A
FERRITE DIMENSION FROM PLUG	N/A
PLUG TYPE	Molex 2.54mm Pitch 4-Pin Header PN: 22-11-2042 MATES W/ PN: 22-01-2047 or Equivalent
OUTPUT CONNECTOR GENDER	
OVERMOLDED	No
OVER MOLD ORIENTATION	
CONNECTOR PIN OUT:	Pins 1 and 2: +V, Pins 3 and 4: -V
ADDITIONAL REQUIREMENTS	

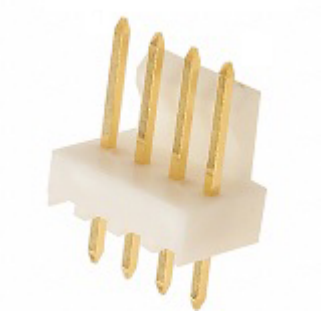

Optional wiring kits available:

PN/Ordering No	Length	End A	End B
XHP410070M7XHP4(R)	70	JST XHP-4	JST XHP-4
XHP410070M7MLX3(R)	70	JST XHP-4	Molex 09-93-0300

Custom lengths, construction, cable types, ferrites, filters, and termination available upon request.

ADDITIONAL OUTPUT PLUG OPTIONS ARE AVAILABLE AT https://www.globtek.com/connectors/
STANDARD PLUGS AND CONNECTORS CAN BE SEEN ONLINE AT https://www.globtek.com/connectors/
CALCULATE VOLTAGE REGULATION/DROP WITH OUR ONLINE CALCULATOR: https://en.globtek.com/output-cable-regulation-calculator/

PROPRIETARY INFORMATION
PROPRIETARY OF GLOBTEK, INC. ANY REPRODUCTION, DISCLOSURE OR USE OF THIS DRAWING, IN WHOLE OR IN PART, IS HEREBY PROHIBITED EXCEPT AS SPECIFIED IN WRITING BY GLOBTEK, INC. © GlobTek, Inc. 2014 - 2022
guest /09/16/2022 4:23:29 AM

GlobTek, Inc.
www.globtek.com
186 Veterans Drive,
Northvale, NJ 07647
Tel. (201) 784-1000
Fax (201) 784-0111

Drawing Title: GTM43007-B6048-FW, ICT / ITE / Medical Power Supply, Efficiency Level: N/A, Case Color/Style: PCB, Open Frame/Internal, Regulated Switchmode AC-DC Power Supply AC Adaptor, Input Rating: 100-240V~, 50-60Hz, Molex Header (or equal) , Output Rating: 60W, 48.0V@1.25A, Output Configuration: N/A mm, N/A/4 Cond, , Molex 2.54mm Pitch 4-Pin Header PN: 22-11-2042 MATES W/ PN: 22-01-2047 or Equivalent, Ferrite: None, N/A, GT Cord # C0127, Pin Out: Pins 1 and 2: +V, Pins 3 and 4: -V, Blades/Input Cord: Not Applicable, Approvals: CB 62368; ETL 62368; EAC; UKCA; Conforms to 62368-1; CCC; Book 60601; CB 60601-1 2MOPP (6W max); CE; China RoHS; Double Insulation; RoHS; Ukraine; WEEE; CE; FCC; LPS 60950; Level V; Fuse 60335; CB 60950; CB EN/IEC 60335-1; cETLus ES60601; cETLus; cETLus 60601-1 3rd; Fuse 60335; WDaE;	
Model No. GTM43007-B6048-FW	
Part No./Ordering No. GTM43007-B6048-FW(R)	Rev D1

OUTPUT CONNECTOR HOOK UP

TO ADDRESS SYSTEM-LEVEL EMI CONCERNS, FERRITE CHOKES/BEADS MAY BE ADDED/REVISED UPON REQUEST. A SAMPLE KIT OF GLOBTEK'S STANDARD FERRITES IS AVAILABLE UNDER GLOBTEK P/N: EMI-MITIGATION-KIT1

FOR ADDITIONAL INFORMATION, PLEASE READ OUR WHITE PAPER AT:
https://en.globtek.com/technical-articles/ferrite-kit-radiated-emi-suppression-kit-for-globtek-power-supplies-cable-assemblies

PROPRIETARY INFORMATION
PROPRIETARY OF GLOBTEK, INC. ANY REPRODUCTION, DISCLOSURE OR USE OF THIS DRAWING, IN WHOLE OR IN PART, IS HEREBY PROHIBITED EXCEPT AS SPECIFIED IN WRITING BY GLOBTEK, INC. © GlobTek, Inc. 2014 - 2022
guest /09/16/2022 4:23:29 AM

LABEL:L-1470

LABEL P/N:	ISO 15223 medical device compliant label
MATERIAL:	Flat Thermal Transfer, Imprintable, Polyester Label and/or Pad Printed and/or Molded, and/or Laser Engraved in the case
BACKGROUND COLOR:	Black if housing is Black, White or Silver if housing is White or Gray.
TEXT COLOR:	White or Silver if label is Black Background for Black housing. Black if label is White or Silver background and Housing is White or Gray.
LABEL WIDTH (mm):	25.0
LABEL HEIGHT (mm):	17.0
SPECIAL BARCODE LABEL MATERIAL:	No

Below is the minimum information which will appear on the label. NOTE: in the logo area additional/actual positioning of symbols and text is subjected to change as per agency updates/requirements or additional model approvals become available.
Agency logos may be in Regulatory Certifications/Label Markings area on the label or molded into the case housing outside the label area. Information will be shown via Label and/or Pad Printed and/or Molded in the case.

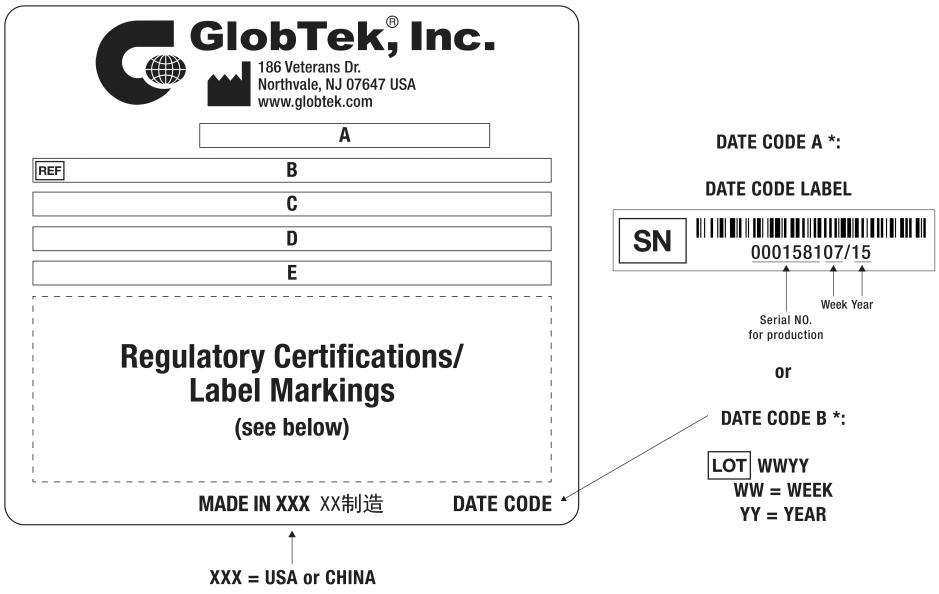

A=ICT / ITE / Medical Power Supply
B=P/N: (料号) GTM43007-B6048-FW(R)
C=Model (型号) GTM43007-B6048-FW
D=Input (输入)100-240V~, 50-60Hz, 1.5A
E=Output (输出)48.0 V ⎓ 1.25 A, 60.0W

PROPRIETARY INFORMATION
PROPRIETARY OF GLOBTEK, INC. ANY REPRODUCTION, DISCLOSURE OR USE OF THIS DRAWING, IN WHOLE OR IN PART, IS HEREBY PROHIBITED EXCEPT AS SPECIFIED IN WRITING BY GLOBTEK, INC. © GlobTek, Inc. 2014 - 2022
guest /09/16/2022 4:23:29 AM

AGENCY ONLINE DOCUMENTS	http://www.globtek.info/certs/GTM43007/
CE EC-Declaration for Medical	http://globtek.force.com/models/ec_declaration_product?id=01ta0000005caSU&m=1
CE EC-Declaration for Industrial/Commercial/ITE	http://globtek.force.com/models/ec_declaration_product?id=01ta0000005caSU&i=3
CE EC-Declaration for Household	Contact GlobTek for more information
UKCA-Declaration for Medical	http://globtek.force.com/models/ukca_declaration_product?id=01ta0000005caSU&m=1
UKCA-Declaration for Industrial/Commercial/ITE	http://globtek.force.com/models/ukca_declaration_product?id=01ta0000005caSU&i=3
UKCA-Declaration for Household	Contact GlobTek for more information
Morocco SDoC Declaration	https://globtek.secure.force.com/models/Morocco_SDoC_Declaration?id=a0Oa000000Mgc93EAB
RoHS/RoHS3 Declaration	https://www.globtek.com/pdf/rohs_cert/01ta0000005caSUAAY
REACH Declaration	https://www.globtek.com/pdf/iso_certificates/REACH.pdf
Conflict Minerals Declaration	https://www.globtek.com/pdf/conflict-minerals.pdf
Prop 65 Statement	https://en.globtek.com/prop-65-statement.pdf

IPXY rating is based on 3rd party testing and customers should check suitability and test system level IPXY rating before ordering.

Regulatory Certifications/Label Markings

Below follows a link to the latest regulatory certifications and marks for this specific product. National standards as well as certification schemes are constantly changing and so is the set of certification marks and symbols applicable to this product. Various standards, marks and symbols, and certificates are subject to change at any time without notice.

Additional standards or unique country certifications are available upon request. Please contact Globtek to request a quotation.

LATEST PRODUCT/MODEL CERTIFICATIONS:	https://www.globtek.com/datasheet/w71027
AGENCY ONLINE DOCUMENTS:	http://www.globtek.info/certs/GTM43007/



(F1) Class II / Double Insulated

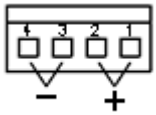

Pins 1 and 2: +V,

Pins 3 and 4: -V

PROPRIETARY OF GLOBTEK, INC. ANY REPRODUCTION, DISCLOSURE OR USE OF THIS DRAWING, IN WHOLE OR IN PART, IS HEREBY PROHIBITED EXCEPT AS SPECIFIED IN WRITING BY GLOBTEK, INC. © GlobTek, Inc. 2014 - 2022
guest /09/16/2022 4:23:29 AM

GlobTek, Inc.
www.globtek.com
186 Veterans Drive,
Northvale, NJ 07647
Tel. (201) 784-1000
Fax (201) 784-0111

Drawing Title: GTM43007-B6048-FW, ICT / ITE / Medical Power Supply, Efficiency Level: N/A, Case Color/Style: PCB, Open Frame/Internal, Regulated Switchmode AC-DC Power Supply AC Adaptor, Input Rating: 100-240V~, 50-60Hz, Molex Header (or equal) , Output Rating: 60W, 48.0V@1.25A, Output Configuration: N/A mm, N/A/4 Cond, , Molex 2.54mm Pitch 4-Pin Header PN: 22-11-2042 MATES W/ PN: 22-01-2047 or Equivalent, Ferrite: None, N/A, GT Cord # C0127, Pin Out: Pins 1 and 2: +V, Pins 3 and 4: -V, Blades/Input Cord: Not Applicable, Approvals: CB 62368; ETL 62368; EAC; UKCA; Conforms to 62368-1; CCC; Book 60601; CB 60601-1 2MOPP (6W max); CE; China RoHS; Double Insulation; RoHS; Ukraine; WEEE; CE; FCC; LPS 60950; Level V; Fuse 60335; CB 60950; CB EN/IEC 60335-1; cETLus ES60601; cETLus; cETLus 60601-1 3rd; Fuse 60335; WDaE;

Model No. GTM43007-B6048-FW

Part No./Ordering No. GTM43007-B6048-FW(R) | Rev D1

PACKAGING

Packing Spec P/N:	Packing GTM43007-BWWVV-F(W)
Box Qty:	90
Gift Box Size (mm):	110*60*40
Gift Box Color:	White
Master Carton Size (mm):	380 x 380 x 250
Master Carton Cubic Volume (m^3):	0.04
Master GW (Kg):	15.2 kg
BLADES INCLUDED:	N/A: Not Applicable
BLADE/CORD INSTALLED:	N/A: Not Applicable
USER MANUAL*:	
USER MANUAL WEB LINK:	

* This specification sheet is considered the user manual for all applications. It is expected that the buyer of this product will use it to formulate their own user manual for their end product and a user manual specifically for the power adapter is not usually required. If a user manual is not specifically listed above then none will be provided with this unit.

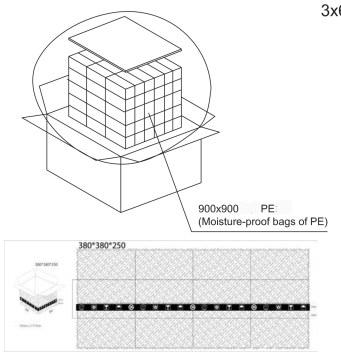

90 PCS/CARTON
3x6x5

THIS DWG CAN BE USED FOR THE MODEL WHOSE PACKING IS SAME AS THIS

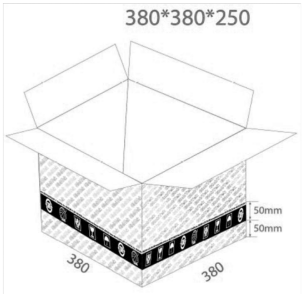

OUTSIDE CARTON
380^{+10}_{-0}*380^{+10}_{-0}*250^{+10}_{-0}

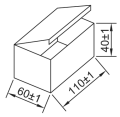

GIFT BOX
110(L)X60(W)X40(H)

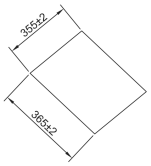

PARTITION

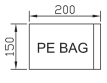

PROPRIETARY INFORMATION
PROPRIETARY OF GLOBTEK, INC. ANY REPRODUCTION, DISCLOSURE OR USE OF THIS DRAWING, IN WHOLE OR IN PART, IS HEREBY PROHIBITED EXCEPT AS SPECIFIED IN WRITING BY GLOBTEK, INC. © GlobTek, Inc. 2014 - 2022
guest /09/16/2022 4:23:29 AM

INSTRUCTIONS TO THE OEM SYSTEMS ENGINEER

It is the responsibility of the OEM systems engineer to provide the end system user instructions and warnings for the use of this product in the end system.

If an input cord is required for this product, AC Mains voltage should be provided to the power supply by a power supply cord approved to the national standards of the country in which it will be used.

This product is not designed to be repaired. No serviceable parts inside. A blown internal fuse is an indication of catastrophic failure of circuit component(s). If a Failure Analysis is required for a failed power supply/battery charger, please return the damaged unit to GlobTek for an accurate determination of the root cause of the failure.

EMC Compliance of the complete OEM product, including the GlobTek power supply/battery charger needs to be verified by the OEM systems engineer.

INSTRUCTION SHEET

N/A

PROPRIETARY INFORMATION

PROPRIETARY OF GLOBTEK, INC. ANY REPRODUCTION, DISCLOSURE OR USE OF THIS DRAWING, IN WHOLE OR IN PART, IS HEREBY PROHIBITED EXCEPT AS SPECIFIED IN WRITING BY GLOBTEK, INC. © GlobTek, Inc. 2014 - 2022

guest /09/16/2022 4:23:29 AM