N ATTENUATOR

7 DB 12.4 GHZ 2W

R414.707.000

Series : **ATTENUATOR**

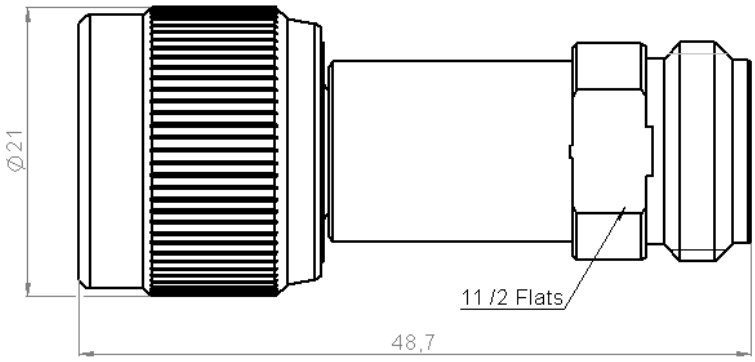

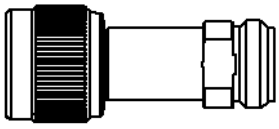

SCALE 1/1

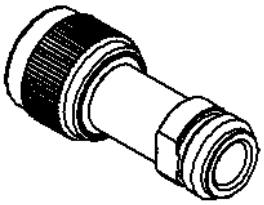

All dimensions are in mm.

COMPONENTS	MATERIALS	PLATING(µm)
BODY	**BRASS**	**NICKEL 5**
MALE CENTER CONTACT	**BERYLLIUM COPPER**	**GOLD 2.5 OVER NICKEL 1**
FEMALE CENTER CONTACT	**BERYLLIUM COPPER**	**GOLD 2.5 OVER NICKEL 1**
OUTER CONTACT		
INSULATOR	**PTFE**	
GASKET	**SILICONE RUBBER**	
SUBSTRATE	**ALUMINA**	
RESISTOR	**Thin film**	
OTHERS PARTS		

Issue : 0823 F

In the effort to improve our products, we reserve the right to make changes judged to be necessary.

N ATTENUATOR

7 DB 12.4 GHZ 2W

R414.707.000

Series : **ATTENUATOR**

ELECTRICAL CHARACTERISTICS

Frequency (GHz)	DC - 4	4 - 8	8 - 12.4
V.S.W.R (≤)	1.15	1.20	1.25
Deviation(±dB)	0.30	0.50	0.70

Operating Frequency Range	DC - 12.4	GHz
Impedance	50	Ω
Nominal Attenuation	7	dB
Peak power at 25°C (1µs, 1‰)	100	W
Average power at 25°C	2	W (Free Air Cooled) W (Conduction Cooled)

MECHANICAL CHARACTERISTICS

Connectors	N	Male Female	MIL-C 39012
Weight	59,6200	g	

ENVIRONMENTAL CHARACTERISTICS

Operating temperature range	-55 /+125	°C
Storage temperature range	-55 /+125	°C

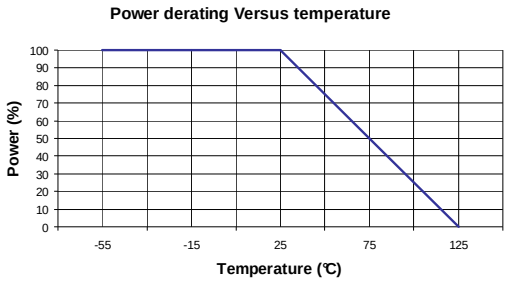

SPECIFICATION

OTHER CHARACTERISTICS

Issue : 0823 F

In the effort to improve our products, we reserve the right to make changes judged to be necessary.