KYCON, Inc. 305 Digital Drive, Morgan Hill, CA 95037 (408)494-0330

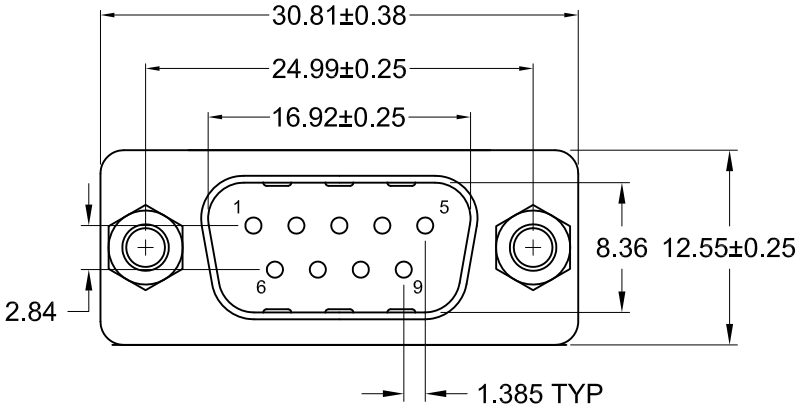

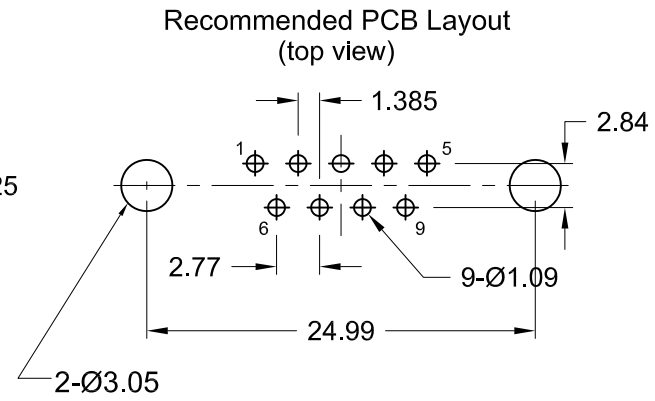

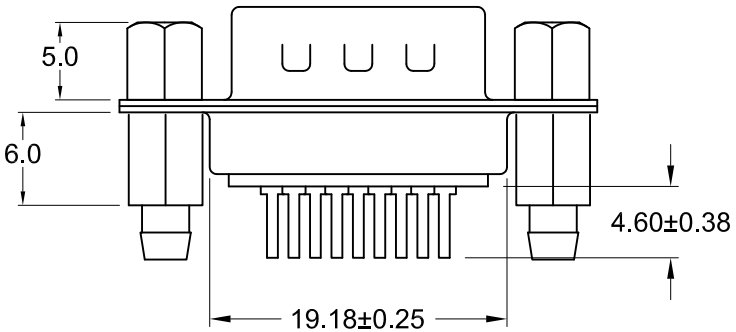

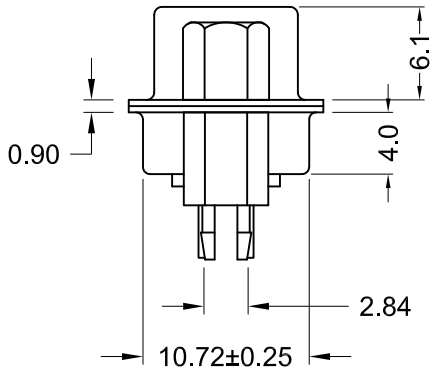

Material and Finish

Shell: steel, Nickel plated

Insulator: PBT with glass-fiber reinforcement, UL 94V-0 rated, color-black

Contact Material:

Plug: Brass

Contact Plating:

Standard:

Gold flash on mating end, tin on termination end, with entire contact nickel underplated

-15 Option:

15u" gold on mating end, tin on termination end, with entire contact nickel underplated

-30 Option:

30u" gold on mating end, tin on termination end, with entire contact nickel underplated

Electrical Specifications

Rated Current: 2A

Rated Voltage: 30V RMS

Withstanding Voltage:

500V (rms) AC for 1 minute

Insulation Resistance:

more than 1000 Megohm at 500V DC

Contact Resistance:

13 milliohm max.

Dielectric Strength:

1000V for 1 minute

Operating Temperature:

-55°C to +105°C

Ordering Information	
Part Number	Contact Area Plating Finish
K85X-ED-9P-BRJ	Gold Flash (standard)
K85X-ED-9P-BRJ15	15u" Gold (15 option)
K85X-ED-9P-BRJ30	30u" Gold (30 option)

RoHS COMPLIANT

C US LR78160

Tolerances
X.X ± 0.25
X.XX ± 0.15
Unless Stated Otherwise

REV.	DATE	DESCRIPTION	REV. BY	CHK. BY
A1	1/05/06	New Drawing	R. Aguirre	H. MA
A2	1/09/08	ECO #07-052	WILL H.	H. MA
A3	12/31/17	ECO #17-030	G. Serrato	C. Furumasu

DRAWN BY	DATE
R. Aguirre	10/13/05
	UNITS
	mm

K85X-ED-9P-BRJ

Vertical PCB Mount D-Sub ,RoHS Compliant

9 Pin Male, Bdlocks, Jackscrews

KYCON