GlobTek, Inc.
www.globtek.com
186 Veterans Drive,
Northvale, NJ 07647
Tel. (201) 784-1000
Fax (201) 784-0111

Drawing Title: GTM96300-3619.5-1.5-R3A, Medical/ICT/ITE/Household use Power Supply, Efficiency Level: USA DOE Level VI / Eco-design Directive 2009/125/EC, (EU) 2019/1782, Case Color/Style: GlobTek Black, Wall Plug-in+Desktop Combination, Regulated Switchmode AC-DC Power Supply AC Adaptor, Input Rating: 100-240V~, 50-60 Hz, IEC 60320/C6 , Output Rating: 36W, 18.0V@2.0A, Output Configuration: 1500 mm, 18/2 Cond, Round Black, T-plug system (includes 5.5x2.5, 5.5x2.1, 3.5x1.3mm plugs in each kit), Ferrite: None, GlobTek Black, GT Cord # C3775, Pin Out: Polarity Configuration T00 All plugs are Medical Grade, Locking, Polarized once installed, and single use only. Product demonstration link: https://en.globtek.com/news/t00-changeable-output-plug-system-for-power-supplies MOLDED CONNECTORS AVAILABLE, Blades/Input Cord: R-Series 5-15P North America, Approvals: CCC (up to 48V only); CB 62368; CB 60950; ETL 1310; ETL; ETL; 230V CoC Tier 2; EAC; ETL 62368; UKCA; LPS 62368; UL 1310; Conforms to 62368-1; RCM; cETLus 60950-1; UL 1310; cETLus 60950-1; cETLus 60601; Morocco; RCM; S-Mark 62368; IRAM; NOM (5V only); Korea (5, 5.4, 5.95, 7.5V Only); CAN ICES-3; FCC; cETLus 60601-1 3rd; CB 60335; IP40; LPS 60950; Class I; Fuse 60335; Book 60601; cETLus 60950; Fuse 60335; S-Mark IEC/EN 60601-1; PSE; PSE; PSE;

Model No. GTM96300-3619.5-1.5-R3A

Part No./Ordering No. RR9LH2000T00NACIMR6B | Rev B

In Addition to GlobTek Inc.'s renewed ISO9001:2015 - Quality Management System Certification, GlobTek Inc. is now certified to:

ISO13485:2016 - Medical Devices Quality Management System Certification
ISO14001:2015 - Environmental Management System Certification

ISO Certificates are available online at https://www.globtek.com/iso-certificates/

The acceptance of this specification and use of the product described in this document indicates the acceptance and binding of the customer to Globtek TERMS AND CONDITIONS (attached to the end of this document), which supersede all other agreements, terms, and conditions (https://en.globtek.com/terms-and-conditions/).

The purchaser of this product (Customer) agrees that it is their sole responsibility to determine suitability/fitness of the product described in this specification for their application and to take precautions for protection against any hazards attendant to the handling and use of the product.

Footnote:

GlobTek Inc. will not be liable for the safety and performance of these power supplies/battery packs if unauthorized access and repair occurs. End user should consult applicable UL, CSA or EN standards for proper installation instruction.

Limitation of Use:

GlobTek products are intended for use with commercial, medical, and/or industrial equipment only. GlobTek product are not authorized for use as mission critical components in life support hazardous environment, nuclear or aircraft applications without prior written approval from the CEO of GlobTek Inc.
Contents of this document are subject to change without prior notice.

Customer Approval of Specification:

Please approve, sign and send back to GlobTek so we can complete order processing.
A delay in receipt of this form will delay delivery schedule.

Company Name:	Customer P/N:
Quote Number:	Date:
Authorized Representative Name:	Authorized Representative Signature:

PROPRIETARY INFORMATION
PROPRIETARY OF GLOBTEK, INC. ANY REPRODUCTION, DISCLOSURE OR USE OF THIS DRAWING, IN WHOLE OR IN PART, IS HEREBY PROHIBITED EXCEPT AS SPECIFIED IN WRITING BY GLOBTEK, INC. © GlobTek, Inc. 2017 - 2022
guest /09/15/2022 7:58:25 PM CLONED FROM RR9LH3300LCPNACIMRVB

GlobTek, Inc.
www.globtek.com
186 Veterans Drive,
Northvale, NJ 07647
Tel. (201) 784-1000
Fax (201) 784-0111

Drawing Title: GTM96300-3619.5-1.5-R3A, Medical/ICT/ITE/Household use Power Supply, Efficiency Level: USA DOE Level VI / Eco-design Directive 2009/125/EC, (EU) 2019/1782, Case Color/Style: GlobTek Black, Wall Plug-in+Desktop Combination, Regulated Switchmode AC-DC Power Supply AC Adaptor, Input Rating: 100-240V~, 50-60 Hz, IEC 60320/C6 , Output Rating: 36W, 18.0V@2.0A, Output Configuration: 1500 mm, 18/2 Cond, Round Black, T-plug system (includes 5.5x2.5, 5.5x2.1, 3.5x1.3mm plugs in each kit), Ferrite: None, GlobTek Black, GT Cord # C3775, Pin Out: Polarity Configuration T00 All plugs are Medical Grade, Locking, Polarized once installed, and single use only. Product demonstration link: https://en.globtek.com/news/t00-changeable-output-plug-system-for-power-supplies MOLDED CONNECTORS AVAILABLE, Blades/Input Cord: R-Series 5-15P North America, Approvals: CCC (up to 48V only); CB 62368; CB 60950; ETL 1310; ETL; ETL; 230V CoC Tier 2; EAC; ETL 62368; UKCA; LPS 62368; UL 1310; Conforms to 62368-1; RCM; cETLus 60950-1; UL 1310; cETLus 60950-1; cETLus 60601; Morocco; RCM; S-Mark 62368; IRAM; NOM (5V only); Korea (5, 5.4, 5.95, 7.5V Only); CAN ICES-3; FCC; cETLus 60601-1 3rd; CB 60335; IP40; LPS 60950; Class I; Fuse 60335; Book 60601; cETLus 60950; Fuse 60335; S-Mark IEC/EN 60601-1; PSE; PSE; PSE;

Model No. GTM96300-3619.5-1.5-R3A

Part No./Ordering No. RR9LH2000T00NACIMR6B | Rev B

REVISION HISTORY

REV	DESCRIPTION	SUB	DATE	APPROVED
B	Update Grounding configuration to F2	QA	11/29/2018	QA
A	Initial release	QA	05/09/2018	QA

POWER SUPPLY INFORMATION

TYPE:	Wall Plug-in+Desktop Combination
TECHNOLOGY:	Regulated Switchmode AC-DC Power Supply AC Adaptor
CASE COLOR:	GlobTek Black
NAMEPLATE RATED INPUT:	100-240V~, 50-60 Hz, 1.0A
INPUT CONFIG:	IEC 60320/C6
WATTS:	36.0
VOLTS OUT:	18.0
CURRENT OUT (Amps):	2.0
BLADE/CORD INCLUDED:	R-NA-3(R) R-Series 5-15P North America
BLADE/CORD INSTALLED:	R-NA-3(R) :R-Series 5-15P North America
INGRESS PROTECTION:	IP40 (cord), IP52(R-blades)
GROUNDING CONFIGURATION:	(F2) Isolated Functional Earth for GTM96 series, Improved EMC
EFFICIENCY LEVEL:	USA DOE Level VI / Eco-design Directive 2009/125/EC, (EU) 2019/1782 - Europe Code of Conduct on Energy Efficiency of External Power Supplies - Version 5
OUTPUT CONFIGURATION:	1500 mm, 18/2 Cond, Round Black, T-plug system (includes 5.5x2.5, 5.5x2.1, 3.5x1.3mm plugs in each kit), Ferrite: None, GlobTek Black, GT Cord # C3775
OVERMOLDED:	Yes
OUTPUT CONNECTOR GENDER:	not applicable
CONNECTOR PIN OUT:	Polarity Configuration T00 All plugs are Medical Grade, Locking, Polarized once installed, and single use only. Product demonstration link: https://en.globtek.com/news/t00-changeable-output-plug-system-for-power-supplies MOLDED CONNECTORS AVAILABLE
LABEL SPECS:	ISO 15223 medical device compliant label,L-1470
SPECIAL BARCODE LABEL MATERIAL:	No
PACK SPEC:	Cell packing for DT plug model with T00 plug and manual
USER MANUAL:	809-DESKTOPUSERMANUAL on A4 paper

PROPRIETARY INFORMATION
PROPRIETARY OF GLOBTEK, INC. ANY REPRODUCTION, DISCLOSURE OR USE OF THIS DRAWING, IN WHOLE OR IN PART, IS HEREBY PROHIBITED EXCEPT AS SPECIFIED IN WRITING BY GLOBTEK, INC. © GlobTek, Inc. 2017 - 2022
guest /09/15/2022 7:58:25 PM CLONED FROM RR9LH3300LCPNACIMRVB

GlobTek, Inc.
www.globtek.com
186 Veterans Drive,
Northvale, NJ 07647
Tel. (201) 784-1000
Fax (201) 784-0111

Drawing Title: GTM96300-3619.5-1.5-R3A, Medical/ICT/ITE/Household use Power Supply, Efficiency Level: USA DOE Level VI / Eco-design Directive 2009/125/EC, (EU) 2019/1782, Case Color/Style: GlobTek Black, Wall Plug-in+Desktop Combination, Regulated Switchmode AC-DC Power Supply AC Adaptor, Input Rating: 100-240V~, 50-60 Hz, IEC 60320/C6 , Output Rating: 36W, 18.0V@2.0A, Output Configuration: 1500 mm, 18/2 Cond, Round Black, T-plug system (includes 5.5x2.5, 5.5x2.1, 3.5x1.3mm plugs in each kit), Ferrite: None, GlobTek Black, GT Cord # C3775, Pin Out: Polarity Configuration T00 All plugs are Medical Grade, Locking, Polarized once installed, and single use only. Product demonstration link: https://en.globtek.com/news/t00-changeable-output-plug-system-for-power-supplies MOLDED CONNECTORS AVAILABLE, Blades/Input Cord: R-Series 5-15P North America, Approvals: CCC (up to 48V only); CB 62368; CB 60950; ETL 1310; ETL; ETL; 230V CoC Tier 2; EAC; ETL 62368; UKCA; LPS 62368; UL 1310; Conforms to 62368-1; RCM; cETLus 60950-1; UL 1310; cETLus 60950-1; cETLus 60601; Morocco; RCM; S-Mark 62368; IRAM; NOM (5V only); Korea (5, 5.4, 5.95, 7.5V Only); CAN ICES-3; FCC; cETLus 60601-1 3rd; CB 60335; IP40; LPS 60950; Class I; Fuse 60335; Book 60601; cETLus 60950; Fuse 60335; S-Mark IEC/EN 60601-1; PSE; PSE; PSE;

Model No. GTM96300-3619.5-1.5-R3A

Part No./Ordering No. RR9LH2000T00NACIMR6B | Rev B

Notes/Modifications/Customizations (notes in this section supersede the values shown in the standard spec):

DIMENSIONS ARE IN MM UNLESS SPECIFIED OTHERWISE.

PROPRIETARY INFORMATION
PROPRIETARY OF GLOBTEK, INC. ANY REPRODUCTION, DISCLOSURE OR USE OF THIS DRAWING, IN WHOLE OR IN PART, IS HEREBY PROHIBITED EXCEPT AS SPECIFIED IN WRITING BY GLOBTEK, INC. © GlobTek, Inc. 2017 - 2022
guest /09/15/2022 7:58:25 PM CLONED FROM RR9LH3300LCPNACIMRVB

ELECTRICAL SPECIFICATIONS

A) ELECTRICAL SPECIFICATIONS:

01. Input Voltage: Specified 90-264 Vac, Nameplate rated: 100-240Vac
    90-264 Vac range @ 100% of rated load current
    85-264 Vac range @ 85% of rated load current
    110-370 VDC range @ 100% of rated load current
02. Input Frequency: Specified 47-63 Hz, Nameplate rated 50-60Hz
03. Output Regulation: +/- 5% measured at the output connector
04. Line Voltage Regulation: +/- 0.5% typical measured at full load
05. Green Power On Indicator LED
06. Output Ripple (Vp-p): 1% or 100 mV whichever is greater, measured at 20 MHz bandwidth with 0.1 uf ceramic capacitor in parallel with a low impedance 47 uf electrolytic capacitor connected at the end of the output connector
07. Turn-ON/OFF Overshoot: 5% maximum, 1 mS typical recovery time for 40% to 70% step load
08. Turn-ON Delay: 1 second maximum @ full load, nominal line
09. Hold-Up Time: 8 mS typical @ nominal input voltage and full load
10. Inrush Current: 30A/60A maximum cold start @ 115/230Vac input
11. Efficiency: Compliant with Efficiency Level VI and CoC Tier 2 standards
12. No Load Standby Power: <0.075 W @ 230Vac

B) PROTECTION

01. Input Protection: Input line fusing and 300Vac MOV
02. Short Circuit/ Overload: Electronically Protected unit will auto recover upon removal of fault
    Output Current Limit: 110% to 160% of rated output current
    (upper end of current limit range is determined by normal output power rating,
    not derated output power level)
03. Output Over-Voltage: 110% to 130% of nominal output voltage

C) SAFETY

01. Dielectric Withstand Voltage: 4000Vac or 5656Vdc from input to output,
On Class I models, 3000Vac or 4242Vdc from input to earth
02. Earth Leakage Current: Class I models < 300uA, N/A for Class II models
03. Touch Current: Class I models < 20uA, Class II models < 75uA
04. Earth Continuity Test: < 0.1 Ohm between Earth Pin at AC input and PCB termination point (Class I models only)
05. Means of Protection: 2 x MOPP
06. Compliant Standards: See listings at end of this drawing for specifics
07. Output Isolation Options:
    a) C8 or C18 Inlet, Class II
    b) C6 or C14 Inlet, Class II FE, Output Isolated from Earth contact
    c) C6 or C14 Inlet, Class I, Output negative directly attached to Earth contact

D) EMC

EN 60601-1-2, 4th edition
Emissions, per EN 55032, EN 61000-6-3, EN 61000-6-4, CISPR11 and CISPR22
Conducted Emissions: Class B, FCC Part 15, Class B
Radiated Emissions: Class B, FCC Part 15, Class B

PROPRIETARY INFORMATION
PROPRIETARY OF GLOBTEK, INC. ANY REPRODUCTION, DISCLOSURE OR USE OF THIS DRAWING, IN WHOLE OR IN PART, IS HEREBY PROHIBITED EXCEPT AS SPECIFIED IN WRITING BY GLOBTEK, INC. © GlobTek, Inc. 2017 - 2022
guest /09/15/2022 7:58:25 PM CLONED FROM RR9LH3300LCPNACIMRVB

Line Frequency Harmonics EN61000-3-2, Class A
Voltage Fluctuations/Flicker EN61000-3-3

Immunity, per EN 55024, EN 61000-6-1, EN 61000-6-2
- Static Discharge Immunity EN61000-4-2, 10kV Contact Discharge, 20kV air discharge
- Radiated RF Immunity EN61000-4-3, 10V/m 80-1000MHz, 3V/m 1-2.7GHz, 80% 1KHz AM.
- EFT/Burst Immunity EN61000-4-4, 4kV/100kHz.
- Line Surge Immunity EN61000-4-5, 2kV differential, 4kV common-mode
- Conducted RF Immunity EN61000-4-6, 3Vrms, 80% 1KHz AM
- Power Frequency Magnetic Field Immunity EN61000-4-8, 3A/m
- Voltage Dip Immunity EN61000-4-11, Performance Criteria B/C

E) OTHER:

01. MTBF: 1,000,000 Hours @ 40°C ambient temperature, Full Load
02. GTM96300 Family: -10°C to 40°C ambient temperature with full load
    Regarding Operating Temperature,
    a- See below derating table for output power capability at alternate temperature
    b- Extended low end temperature range available as custom option
03. Operating Humidity: 0% to 95% relative humidity, non-condensing
04. Storage Temperature: -30°C to 80°C
05. Operating Altitude: 5000 Meters
06. ROHS: Compliant with latest regulations, see approvals section below

F) ENCLOSURE

01. Housing: High impact plastic, 94V0 polycarbonate, non-vented
02. Markings: Label or Laser Printed
03. AC Input mechanical options: Desktop C6, C8, C14 or C18 IEC Inlet.
    Hybrid option (Desktop or Changeable Blade Wall Plug-in) Class I or Class II input

G) SPECIAL OPTIONS

01. Cost reduction, removal of LED
02. Custom Cordsets, various cordage types, and connector types
03. Custom Markings
04. Short term Output Surge Capability
05. Reduced Leakage Current versions
06. Tightened output voltage tolerance
07. Reduced output ripple level
08. Reduced output power rating marking
09. High Rel PCB laminate with Plated through Holes for IPC610 Class 2 Compliance

PROPRIETARY INFORMATION
PROPRIETARY OF GLOBTEK, INC. ANY REPRODUCTION, DISCLOSURE OR USE OF THIS DRAWING, IN WHOLE OR IN PART, IS HEREBY PROHIBITED EXCEPT AS SPECIFIED IN WRITING BY GLOBTEK, INC. © GlobTek, Inc. 2017 - 2022
guest /09/15/2022 7:58:25 PM CLONED FROM RR9LH3300LCPNACIMRVB

10. Special Housing Colors and Cordset Colors
11. Quasi Constant Current Output, for Battery Charger Applications
12. Back EMF applications, custom solutions. For unusual motor load aps and other high inductance reverse energy flow requirements
13. Improved Ingress Protection Rating

TO ADDRESS SYSTEM-LEVEL EMI CONCERNS, FERRITE CHOKES/BEADS MAY BE ADDED/REVISED UPON REQUEST. A SAMPLE KIT OF GLOBTEK'S STANDARD FERRITES IS AVAILABLE UNDER GLOBTEK P/N: EMI-MITIGATION-KIT1

FOR ADDITIONAL INFORMATION, PLEASE READ OUR WHITE PAPER AT:
https://en.globtek.com/technical-articles/ferrite-kit-radiated-emi-suppression-kit-for-globtek-power-supplies-cable-assemblies

INGRESS PROTECTION: IP40 (cord), IP52(R-blades)

PROPRIETARY INFORMATION
PROPRIETARY OF GLOBTEK, INC. ANY REPRODUCTION, DISCLOSURE OR USE OF THIS DRAWING, IN WHOLE OR IN PART, IS HEREBY PROHIBITED EXCEPT AS SPECIFIED IN WRITING BY GLOBTEK, INC. © GlobTek, Inc. 2017 - 2022
guest /09/15/2022 7:58:25 PM CLONED FROM RR9LH3300LCPNACIMRVB

GlobTek, Inc.
www.globtek.com
186 Veterans Drive,
Northvale, NJ 07647
Tel. (201) 784-1000
Fax (201) 784-0111

Drawing Title: GTM96300-3619.5-1.5-R3A, Medical/ICT/ITE/Household use Power Supply, Efficiency Level: USA DOE Level VI / Eco-design Directive 2009/125/EC, (EU) 2019/1782, Case Color/Style: GlobTek Black, Wall Plug-in+Desktop Combination, Regulated Switchmode AC-DC Power Supply AC Adaptor, Input Rating: 100-240V~, 50-60 Hz, IEC 60320/C6 , Output Rating: 36W, 18.0V@2.0A, Output Configuration: 1500 mm, 18/2 Cond, Round Black, T-plug system (includes 5.5x2.5, 5.5x2.1, 3.5x1.3mm plugs in each kit), Ferrite: None, GlobTek Black, GT Cord # C3775, Pin Out: Polarity Configuration T00 All plugs are Medical Grade, Locking, Polarized once installed, and single use only. Product demonstration link: https://en.globtek.com/news/t00-changeable-output-plug-system-for-power-supplies MOLDED CONNECTORS AVAILABLE, Blades/Input Cord: R-Series 5-15P North America, Approvals: CCC (up to 48V only); CB 62368; CB 60950; ETL 1310; ETL; ETL; 230V CoC Tier 2; EAC; ETL 62368; UKCA; LPS 62368; UL 1310; Conforms to 62368-1; RCM; cETLus 60950-1; UL 1310; cETLus 60950-1; cETLus 60601; Morocco; RCM; S-Mark 62368; IRAM; NOM (5V only); Korea (5, 5.4, 5.95, 7.5V Only); CAN ICES-3; FCC; cETLus 60601-1 3rd; CB 60335; IP40; LPS 60950; Class I; Fuse 60335; Book 60601; cETLus 60950; Fuse 60335; S-Mark IEC/EN 60601-1; PSE; PSE; PSE;

Model No. GTM96300-3619.5-1.5-R3A

Part No./Ordering No. RR9LH2000T00NACIMR6B | Rev B

3D File Download https://www.globtek.com/dl/The%20outline%20drawing%20for%20GTM96300-R3%20with%20a%20led%20lens.igs

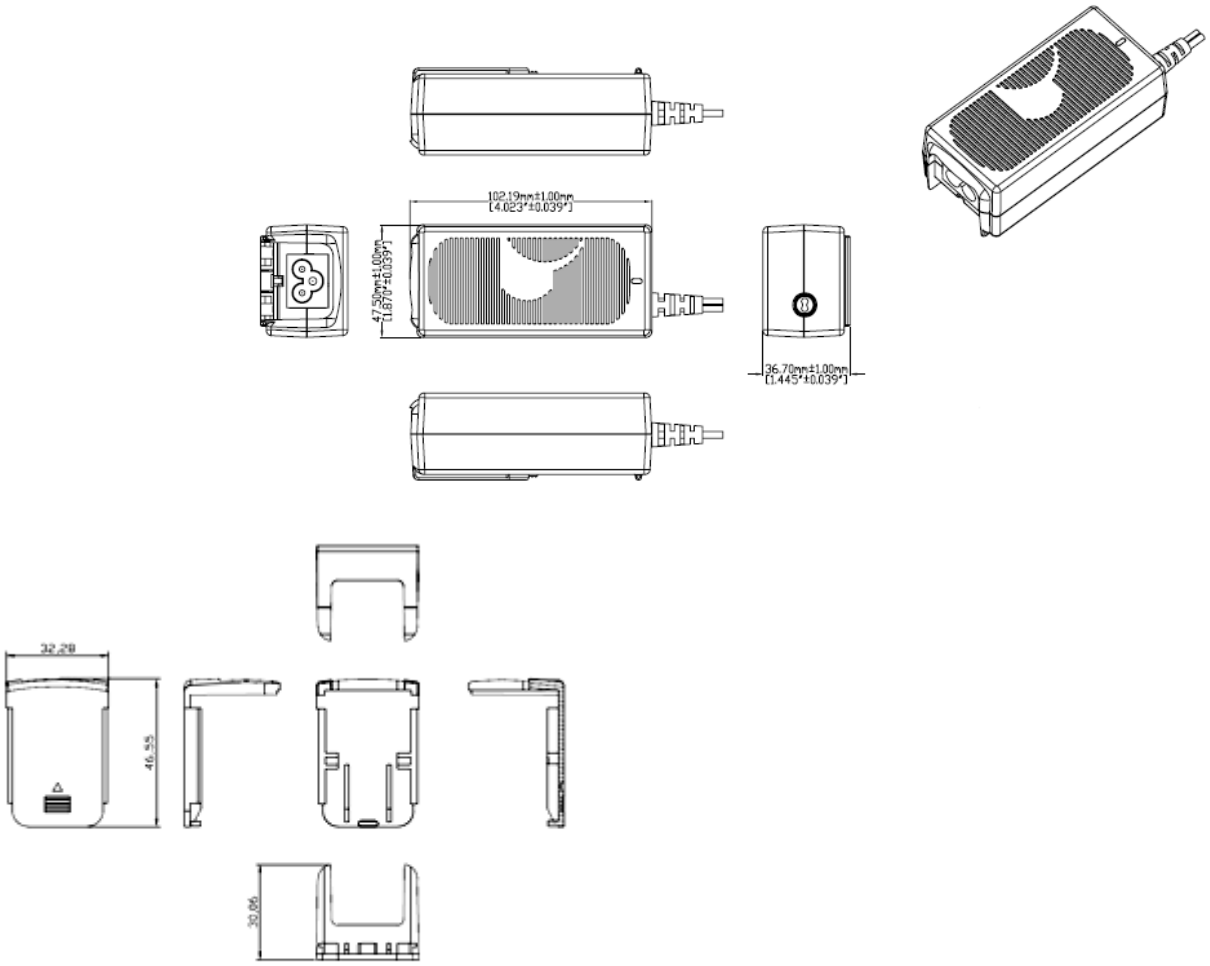

Units shipped without an installed input plug have a "desktop insert" installed.

PROPRIETARY INFORMATION
PROPRIETARY OF GLOBTEK, INC. ANY REPRODUCTION, DISCLOSURE OR USE OF THIS DRAWING, IN WHOLE OR IN PART, IS HEREBY PROHIBITED EXCEPT AS SPECIFIED IN WRITING BY GLOBTEK, INC. © GlobTek, Inc. 2017 - 2022
guest /09/15/2022 7:58:25 PM CLONED FROM RR9LH3300LCPNACIMRVB

DERATING CURVE

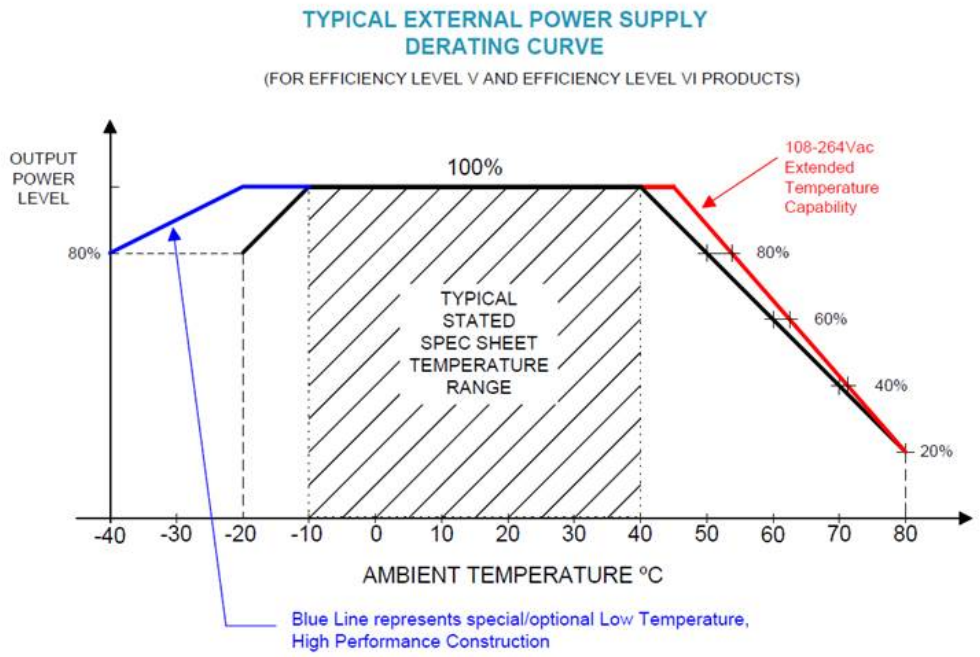

PROPRIETARY INFORMATION

PROPRIETARY OF GLOBTEK, INC. ANY REPRODUCTION, DISCLOSURE OR USE OF THIS DRAWING, IN WHOLE OR IN PART, IS HEREBY PROHIBITED EXCEPT AS SPECIFIED IN WRITING BY GLOBTEK, INC. © GlobTek, Inc. 2017 - 2022

guest /09/15/2022 7:58:25 PM CLONED FROM RR9LH3300LCPNACIMRVB

GlobTek, Inc.
www.globtek.com
186 Veterans Drive,
Northvale, NJ 07647
Tel. (201) 784-1000
Fax (201) 784-0111

Drawing Title: GTM96300-3619.5-1.5-R3A, Medical/ICT/ITE/Household use Power Supply, Efficiency Level: USA DOE Level VI / Eco-design Directive 2009/125/EC, (EU) 2019/1782, Case Color/Style: GlobTek Black, Wall Plug-in+Desktop Combination, Regulated Switchmode AC-DC Power Supply AC Adaptor, Input Rating: 100-240V~, 50-60 Hz, IEC 60320/C6 , Output Rating: 36W, 18.0V@2.0A, Output Configuration: 1500 mm, 18/2 Cond, Round Black, T-plug system (includes 5.5x2.5, 5.5x2.1, 3.5x1.3mm plugs in each kit), Ferrite: None, GlobTek Black, GT Cord # C3775, Pin Out: Polarity Configuration T00 All plugs are Medical Grade, Locking, Polarized once installed, and single use only. Product demonstration link: https://en.globtek.com/news/t00-changeable-output-plug-system-for-power-supplies MOLDED CONNECTORS AVAILABLE, Blades/Input Cord: R-Series 5-15P North America, Approvals: CCC (up to 48V only); CB 62368; CB 60950; ETL 1310; ETL; ETL; 230V CoC Tier 2; EAC; ETL 62368; UKCA; LPS 62368; UL 1310; Conforms to 62368-1; RCM; cETLus 60950-1; UL 1310; cETLus 60950-1; cETLus 60601; Morocco; RCM; S-Mark 62368; IRAM; NOM (5V only); Korea (5, 5.4, 5.95, 7.5V Only); CAN ICES-3; FCC; cETLus 60601-1 3rd; CB 60335; IP40; LPS 60950; Class I; Fuse 60335; Book 60601; cETLus 60950; Fuse 60335; S-Mark IEC/EN 60601-1; PSE; PSE; PSE;

Model No. GTM96300-3619.5-1.5-R3A

Part No./Ordering No. RR9LH2000T00NACIMR6B | Rev B

INPUT CONFIGURATION

(F2) Isolated Functional Earth for GTM96 series, Improved EMC

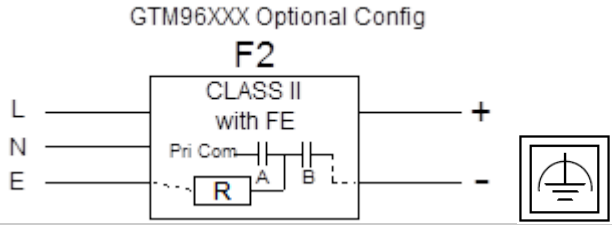

Alternate grounding configurations available upon request.

Blades/Cord Included:R-NA-3(R):R-Series 5-15P North America

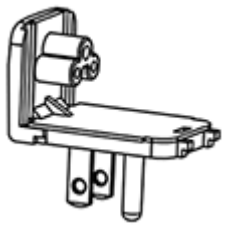

Blades/Cord Installed:R-NA-3(R):R-Series 5-15P North America

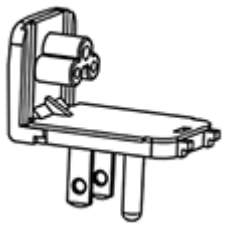

IEC 60320/C6 AC Inlet Connector, Class I, Earth Ground (aka "Mickey Mouse")

PROPRIETARY INFORMATION
PROPRIETARY OF GLOBTEK, INC. ANY REPRODUCTION, DISCLOSURE OR USE OF THIS DRAWING, IN WHOLE OR IN PART, IS HEREBY PROHIBITED EXCEPT AS SPECIFIED IN WRITING BY GLOBTEK, INC. © GlobTek, Inc. 2017 - 2022
guest /09/15/2022 7:58:25 PM CLONED FROM RR9LH3300LCPNACIMRVB

GlobTek, Inc.
www.globtek.com
186 Veterans Drive,
Northvale, NJ 07647
Tel. (201) 784-1000
Fax (201) 784-0111

Drawing Title: GTM96300-3619.5-1.5-R3A, Medical/ICT/ITE/Household use Power Supply, Efficiency Level: USA DOE Level VI / Eco-design Directive 2009/125/EC, (EU) 2019/1782, Case Color/Style: GlobTek Black, Wall Plug-in+Desktop Combination, Regulated Switchmode AC-DC Power Supply AC Adaptor, Input Rating: 100-240V~, 50-60 Hz, IEC 60320/C6 , Output Rating: 36W, 18.0V@2.0A, Output Configuration: 1500 mm, 18/2 Cond, Round Black, T-plug system (includes 5.5x2.5, 5.5x2.1, 3.5x1.3mm plugs in each kit), Ferrite: None, GlobTek Black, GT Cord # C3775, Pin Out: Polarity Configuration T00 All plugs are Medical Grade, Locking, Polarized once installed, and single use only. Product demonstration link: https://en.globtek.com/news/t00-changeable-output-plug-system-for-power-supplies MOLDED CONNECTORS AVAILABLE, Blades/Input Cord: R-Series 5-15P North America, Approvals: CCC (up to 48V only); CB 62368; CB 60950; ETL 1310; ETL; ETL; 230V CoC Tier 2; EAC; ETL 62368; UKCA; LPS 62368; UL 1310; Conforms to 62368-1; RCM; cETLus 60950-1; UL 1310; cETLus 60950-1; cETLus 60601; Morocco; RCM; S-Mark 62368; IRAM; NOM (5V only); Korea (5, 5.4, 5.95, 7.5V Only); CAN ICES-3; FCC; cETLus 60601-1 3rd; CB 60335; IP40; LPS 60950; Class I; Fuse 60335; Book 60601; cETLus 60950; Fuse 60335; S-Mark IEC/EN 60601-1; PSE; PSE; PSE;

Model No. GTM96300-3619.5-1.5-R3A

Part No./Ordering No. RR9LH2000T00NACIMR6B | Rev B

Blade Insertion Instructions

R-Blade Style Instruction Video

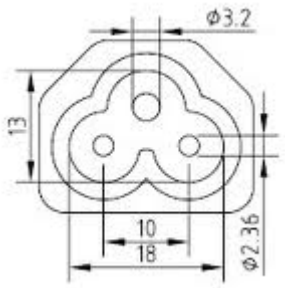

Mates with IEC 60320/C5 Plug

This series of Interchangeable Blade products may be used with Proprietary Interchangeable Blades as described below or with standard international power cords.

Optional INPUT BLADES: R-Socket: below are available blades configurations which are "not included" (unless stated above); may be purchased separately, packaged with power supply, or as a separate "R-KIT" if specified

1. Class I model NEMA 5-15P (Type B), Class I AC power plug with 2 blades & ground pin, R-NA-3(R)
2. Australian AS 3112 (Type I) configuration: SAA 3 pins Class I, R-SAA-3(R)
3. UK BS 1363 (Type G) configuration: UK 3 pins (Ground) Class I, R-UK-3(R)
4. European CEE 7/7 (Type E and F) configuration: European plug 2 PINS + ground, Class I, R-EU-3(R)
5. Desktop Insert

Kits

05. R-KIT-3(R) 1,2,3,4 above
06. R-KIT-3-INTL(R): 2,3,4 above

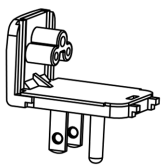

UL 3P
P/N: R-NA-3(R)
NORTH AMERICA
JAPAN

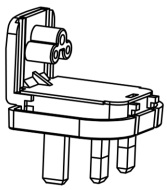

UK 3P
P/N: R-UK-3(R)
UNITED KINGDOM
HONG KONG
SINGAPORE

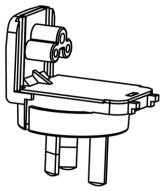

AUS 3P
P/N: R-SAA-3(R)
AUSTRALIA

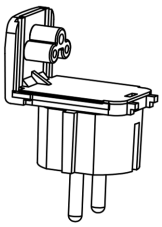

EU 3P
P/N: R-EU-3(R)
EUROPE
SOUTH AMERICA

Below are standard cordsets which are "not included" (unless stated above); these can be purchased separately or package with the power supply. Contact your Sales Engineer if the style required is not shown below. Many more available in different lengths, colors or cable material.

Standard International IEC 320/C5 Cordsets

PROPRIETARY INFORMATION
PROPRIETARY OF GLOBTEK, INC. ANY REPRODUCTION, DISCLOSURE OR USE OF THIS DRAWING, IN WHOLE OR IN PART, IS HEREBY PROHIBITED EXCEPT AS SPECIFIED IN WRITING BY GLOBTEK, INC. © GlobTek, Inc. 2017 - 2022
guest /09/15/2022 7:58:25 PM CLONED FROM RR9LH3300LCPNACIMRVB

GlobTek, Inc.
www.globtek.com
186 Veterans Drive,
Northvale, NJ 07647
Tel. (201) 784-1000
Fax (201) 784-0111

Drawing Title: GTM96300-3619.5-1.5-R3A, Medical/ICT/ITE/Household use Power Supply, Efficiency Level: USA DOE Level VI / Eco-design Directive 2009/125/EC, (EU) 2019/1782, Case Color/Style: GlobTek Black, Wall Plug-in+Desktop Combination, Regulated Switchmode AC-DC Power Supply AC Adaptor, Input Rating: 100-240V~, 50-60 Hz, IEC 60320/C6 , Output Rating: 36W, 18.0V@2.0A, Output Configuration: 1500 mm, 18/2 Cond, Round Black, T-plug system (includes 5.5x2.5, 5.5x2.1, 3.5x1.3mm plugs in each kit), Ferrite: None, GlobTek Black, GT Cord # C3775, Pin Out: Polarity Configuration T00 All plugs are Medical Grade, Locking, Polarized once installed, and single use only. Product demonstration link: https://en.globtek.com/news/t00-changeable-output-plug-system-for-power-supplies MOLDED CONNECTORS AVAILABLE, Blades/Input Cord: R-Series 5-15P North America, Approvals: CCC (up to 48V only); CB 62368; CB 60950; ETL 1310; ETL; ETL; 230V CoC Tier 2; EAC; ETL 62368; UKCA; LPS 62368; UL 1310; Conforms to 62368-1; RCM; cETLus 60950-1; UL 1310; cETLus 60950-1; cETLus 60601; Morocco; RCM; S-Mark 62368; IRAM; NOM (5V only); Korea (5, 5.4, 5.95, 7.5V Only); CAN ICES-3; FCC; cETLus 60601-1 3rd; CB 60335; IP40; LPS 60950; Class I; Fuse 60335; Book 60601; cETLus 60950; Fuse 60335; S-Mark IEC/EN 60601-1; PSE; PSE; PSE;

Model No. GTM96300-3619.5-1.5-R3A

Part No./Ordering No. RR9LH2000T00NACIMR6B | Rev B

Part Number / Link	Country	Plug	Connector	Length (mm)	Length (ft)
3021066F712(R)	N. American (Type B)	NEMA 5-15P	IEC 320/C5	1880	6
1191068F0712(R)	N. American (Type B)	NEMA 5-15P Hospital	IEC 320/C5	2459	8
2194262M0712(R)	Argentina (Type I)	IRAM 2073	IEC320/C5	2050	6.7
2064262M0712(R)	Australian (Type I)	AS3112 / 3 PRONG	IEC 320/C5	2000	6.6
204B4262M0712(R)	Brazil (Type N)	BRAZIL	IEC 320/C5	2000	6.6
6023592M5712(R)	China (Type I)	CCC GR2099	IEC 320/C5	2500	8
23144262M0712(R)	Europe (Type E)	CEE 7/7	IEC 320/C5	2050	6.6
2313K3432M0712(R)	Korea (Type F)	KS C 8305	IEC 320/C5	2000	6.6
205IN4262M0712(R)	India (Type D)	India IS 1293 (also known as IA16A3 or BS546)	IEC320/C5	2000	6.6
377C4262M0712(R)	Israel (Type H)	ISL	IEC320/C5	2050	6.7
23024262M0712(R)	Italy (Type L)	CEI 23-16/VII	IEC 320/C5	2000	6.6
3003316F0712(R)	Japan (Type B)	JIS 8303 / 3 PINS	IEC 320/C5	1830	6
3021066F0712ULPSE(R)	Japan / USA (Type B)	JIS 8303 / 3 PINS + NEMA 5-15P	IEC 320/C5	1830	6
2054262M0712(R)	S. Africa (Type D)	South Africa SABS164-1 (6A type plug)	IEC320/C5	2050	6.7
2084262M0712(R)	S.Africa (Type M)	South Africa SABS164-1 (16A type plug)	IEC 320/C5	2000	6.6
23214262M0712(R)	Switzerland (Type J)	SEV 1011 (EL 203)	IEC 320/C5	2000	6.6
3003316F0712(R)	Taiwan (Type B)	BSMI	IEC 320/C5	2000	6.6
6104262M0712(R)	UK, Hong Kong, Singapore, Gulf States (Type G)	BS1363	IEC 320/C5	2000	6.6

PROPRIETARY INFORMATION
PROPRIETARY OF GLOBTEK, INC. ANY REPRODUCTION, DISCLOSURE OR USE OF THIS DRAWING, IN WHOLE OR IN PART, IS HEREBY PROHIBITED EXCEPT AS SPECIFIED IN WRITING BY GLOBTEK, INC. © GlobTek, Inc. 2017 - 2022
guest /09/15/2022 7:58:25 PM CLONED FROM RR9LH3300LCPNACIMRVB

GlobTek, Inc.
www.globtek.com
186 Veterans Drive,
Northvale, NJ 07647
Tel. (201) 784-1000
Fax (201) 784-0111

Drawing Title: GTM96300-3619.5-1.5-R3A, Medical/ICT/ITE/Household use Power Supply, Efficiency Level: USA DOE Level VI / Eco-design Directive 2009/125/EC, (EU) 2019/1782, Case Color/Style: GlobTek Black, Wall Plug-in+Desktop Combination, Regulated Switchmode AC-DC Power Supply AC Adaptor, Input Rating: 100-240V~, 50-60 Hz, IEC 60320/C6 , Output Rating: 36W, 18.0V@2.0A, Output Configuration: 1500 mm, 18/2 Cond, Round Black, T-plug system (includes 5.5x2.5, 5.5x2.1, 3.5x1.3mm plugs in each kit), Ferrite: None, GlobTek Black, GT Cord # C3775, Pin Out: Polarity Configuration T00 All plugs are Medical Grade, Locking, Polarized once installed, and single use only. Product demonstration link:
https://en.globtek.com/news/t00-changeable-output-plug-system-for-power-supplies MOLDED CONNECTORS AVAILABLE, Blades/Input Cord: R-Series 5-15P North America, Approvals: CCC (up to 48V only); CB 62368; CB 60950; ETL 1310; ETL; ETL; 230V CoC Tier 2; EAC; ETL 62368; UKCA; LPS 62368; UL 1310; Conforms to 62368-1; RCM; cETLus 60950-1; UL 1310; cETLus 60950-1; cETLus 60601; Morocco; RCM; S-Mark 62368; IRAM; NOM (5V only); Korea (5, 5.4, 5.95, 7.5V Only); CAN ICES-3; FCC; cETLus 60601-1 3rd; CB 60335; IP40; LPS 60950; Class I; Fuse 60335; Book 60601; cETLus 60950; Fuse 60335; S-Mark IEC/EN 60601-1; PSE; PSE; PSE;

Model No. GTM96300-3619.5-1.5-R3A

Part No./Ordering No. RR9LH2000T00NACIMR6B | Rev B

PROPRIETARY INFORMATION
PROPRIETARY OF GLOBTEK, INC. ANY REPRODUCTION, DISCLOSURE OR USE OF THIS DRAWING, IN WHOLE OR IN PART, IS HEREBY PROHIBITED EXCEPT AS SPECIFIED IN WRITING BY GLOBTEK, INC. © GlobTek, Inc. 2017 - 2022
guest /09/15/2022 7:58:25 PM CLONED FROM RR9LH3300LCPNACIMRVB

GlobTek, Inc.
www.globtek.com
186 Veterans Drive,
Northvale, NJ 07647
Tel. (201) 784-1000
Fax (201) 784-0111

Drawing Title: GTM96300-3619.5-1.5-R3A, Medical/ICT/ITE/Household use Power Supply, Efficiency Level: USA DOE Level VI / Eco-design Directive 2009/125/EC, (EU) 2019/1782, Case Color/Style: GlobTek Black, Wall Plug-in+Desktop Combination, Regulated Switchmode AC-DC Power Supply AC Adaptor, Input Rating: 100-240V~, 50-60 Hz, IEC 60320/C6 , Output Rating: 36W, 18.0V@2.0A, Output Configuration: 1500 mm, 18/2 Cond, Round Black, T-plug system (includes 5.5x2.5, 5.5x2.1, 3.5x1.3mm plugs in each kit), Ferrite: None, GlobTek Black, GT Cord # C3775, Pin Out: Polarity Configuration T00 All plugs are Medical Grade, Locking, Polarized once installed, and single use only. Product demonstration link: https://en.globtek.com/news/t00-changeable-output-plug-system-for-power-supplies MOLDED CONNECTORS AVAILABLE, Blades/Input Cord: R-Series 5-15P North America, Approvals: CCC (up to 48V only); CB 62368; CB 60950; ETL 1310; ETL; ETL; 230V CoC Tier 2; EAC; ETL 62368; UKCA; LPS 62368; UL 1310; Conforms to 62368-1; RCM; cETLus 60950-1; UL 1310; cETLus 60950-1; cETLus 60601; Morocco; RCM; S-Mark 62368; IRAM; NOM (5V only); Korea (5, 5.4, 5.95, 7.5V Only); CAN ICES-3; FCC; cETLus 60601-1 3rd; CB 60335; IP40; LPS 60950; Class I; Fuse 60335; Book 60601; cETLus 60950; Fuse 60335; S-Mark IEC/EN 60601-1; PSE; PSE; PSE;

Model No. GTM96300-3619.5-1.5-R3A

Part No./Ordering No. RR9LH2000T00NACIMR6B | Rev B

OUTPUT CORD AND CONNECTOR: T00/C3775

ACTUAL CONNECTORS, OVERMOLDS, FERRITES MAY VARY SLIGHTLY FROM THE PICTURE BELOW

CABLE TYPE	Round Black
CABLE LENGTH (mm)	1500
CABLE TOLERANCE (mm)	± 50
WIRE GAUGE (AWG)	18
CONDUCTORS	2
HANK DIMENSION (mm)	80 ± 10
CABLE / CONNECTOR OVERMOLD COLOR	GlobTek Black
FERRITE TYPE / DIMENSION	None
FERRITE # OF TURNS(Definition)	N/A
FERRITE DIMENSION FROM STRAIN RELIEF	N/A
FERRITE DIMENSION FROM PLUG	N/A
PLUG TYPE	T-plug system (includes 5.5x2.5, 5.5x2.1, 3.5x1.3mm plugs in each kit)
OUTPUT CONNECTOR GENDER	not applicable
OVERMOLDED	Yes
OVER MOLD ORIENTATION	Straight
CONNECTOR PIN OUT:	Polarity Configuration T00 All plugs are Medical Grade, Locking, Polarized once installed, and single use only. Product demonstration link: https://en.globtek.com/news/t00-changeable-output-plug-system-for-power-supplies MOLDED CONNECTORS AVAILABLE

ADDITIONAL REQUIREMENTS

This novel system allows for rapid shipment of prototype samples or small quantities of common output voltage and current which can fullfill the needs of most common barrel plug specs. The table below explains the standard and non standard options available as part of this system. This system also allows for both Center Positive and Center Negative polarity.

The T00 plug and adapters are Medical Grade, single use only, Polarized after installation, and not removable without use of special tool.

Any of the below options, and more, are available as molded plugs from stock or special order. Please contact GlobTek for more information.

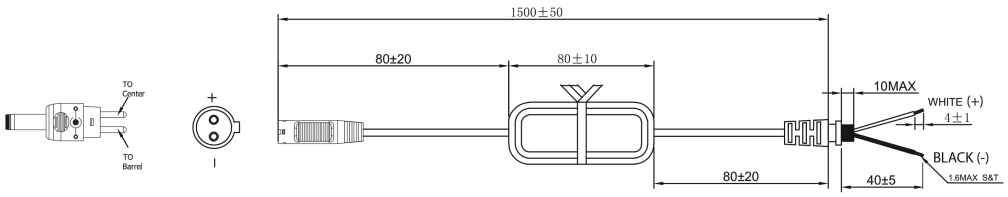

Cable OD 4.8 ± 0.15 mm

Individual conductor (Black & White) OD value of this 18 AWG cable is 2.0 ± 0.1 mm

PROPRIETARY INFORMATION
PROPRIETARY OF GLOBTEK, INC. ANY REPRODUCTION, DISCLOSURE OR USE OF THIS DRAWING, IN WHOLE OR IN PART, IS HEREBY PROHIBITED EXCEPT AS SPECIFIED IN WRITING BY GLOBTEK, INC. © GlobTek, Inc. 2017 - 2022
guest /09/15/2022 7:58:25 PM CLONED FROM RR9LH3300LCPNACIMRVB

GlobTek, Inc.
www.globtek.com
186 Veterans Drive,
Northvale, NJ 07647
Tel. (201) 784-1000
Fax (201) 784-0111

Drawing Title: GTM96300-3619.5-1.5-R3A, Medical/ICT/ITE/Household use Power Supply, Efficiency Level: USA DOE Level VI / Eco-design Directive 2009/125/EC, (EU) 2019/1782, Case Color/Style: GlobTek Black, Wall Plug-in+Desktop Combination, Regulated Switchmode AC-DC Power Supply AC Adaptor, Input Rating: 100-240V~, 50-60 Hz, IEC 60320/C6 , Output Rating: 36W, 18.0V@2.0A, Output Configuration: 1500 mm, 18/2 Cond, Round Black, T-plug system (includes 5.5x2.5, 5.5x2.1, 3.5x1.3mm plugs in each kit), Ferrite: None, GlobTek Black, GT Cord # C3775, Pin Out: Polarity Configuration T00 All plugs are Medical Grade, Locking, Polarized once installed, and single use only. Product demonstration link: https://en.globtek.com/news/t00-changeable-output-plug-system-for-power-supplies MOLDED CONNECTORS AVAILABLE, Blades/Input Cord: R-Series 5-15P North America, Approvals: CCC (up to 48V only); CB 62368; CB 60950; ETL 1310; ETL; ETL; 230V CoC Tier 2; EAC; ETL 62368; UKCA; LPS 62368; UL 1310; Conforms to 62368-1; RCM; cETLus 60950-1; UL 1310; cETLus 60950-1; cETLus 60601; Morocco; RCM; S-Mark 62368; IRAM; NOM (5V only); Korea (5, 5.4, 5.95, 7.5V Only); CAN ICES-3; FCC; cETLus 60601-1 3rd; CB 60335; IP40; LPS 60950; Class I; Fuse 60335; Book 60601; cETLus 60950; Fuse 60335; S-Mark IEC/EN 60601-1; PSE; PSE; PSE;

Model No. GTM96300-3619.5-1.5-R3A

Part No./Ordering No. RR9LH2000T00NACIMR6B | Rev B

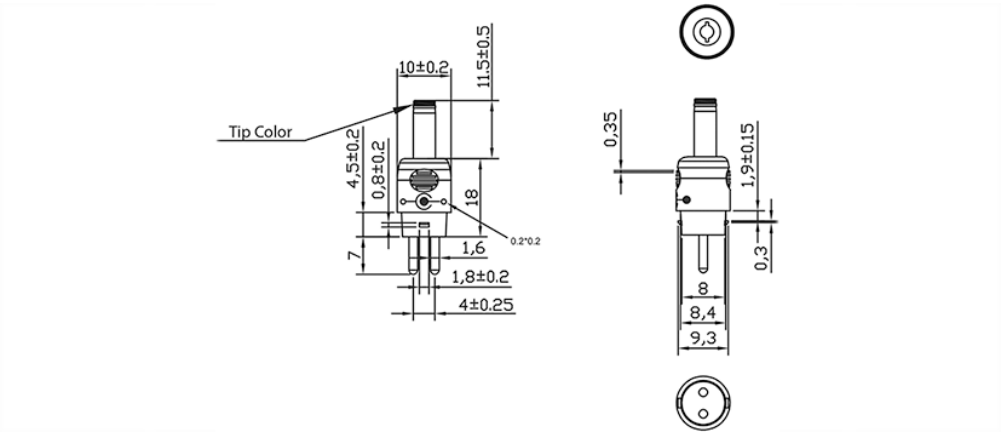

Option upon request: STRAIGHT

Female Barrels are available for special order in any length between 9mm-14mm

This novel system allows for rapid shipment of prototype samples or small quantities of common output voltage and current which can fulfill the needs of most common barrel plug as well as male plug specs. The table explains the standard and non-standard options available as part of this system. This system also allows for both Center Positive and Center Negative
polarity.

The T00 plug and adapters are Medical Grade, single use only, Polarized after installation, and not removable without use of special tool.

Any of the below options, and more, are available as molded plugs from stock or special order. Please contact GlobTek for more information

ADDITIONAL OUTPUT PLUG OPTIONS ARE AVAILABLE AT https://www.globtek.com/connectors/
STANDARD PLUGS AND CONNECTORS CAN BE SEEN ONLINE AT https://www.globtek.com/connectors/
CALCULATE VOLTAGE REGULATION/DROP WITH OUR ONLINE CALCULATOR: https://en.globtek.com/output-cable-regulation-calculator/

PROPRIETARY INFORMATION
PROPRIETARY OF GLOBTEK, INC. ANY REPRODUCTION, DISCLOSURE OR USE OF THIS DRAWING, IN WHOLE OR IN PART, IS HEREBY PROHIBITED EXCEPT AS SPECIFIED IN WRITING BY GLOBTEK, INC. © GlobTek, Inc. 2017 - 2022
guest /09/15/2022 7:58:25 PM CLONED FROM RR9LH3300LCPNACIMRVB

OUTPUT CONNECTOR HOOK UP

TO ADDRESS SYSTEM-LEVEL EMI CONCERNS, FERRITE CHOKES/BEADS MAY BE ADDED/REVISED UPON REQUEST. A SAMPLE KIT OF GLOBTEK'S STANDARD FERRITES IS AVAILABLE UNDER GLOBTEK P/N: EMI-MITIGATION-KIT1

FOR ADDITIONAL INFORMATION, PLEASE READ OUR WHITE PAPER AT:
https://en.globtek.com/technical-articles/ferrite-kit-radiated-emi-suppression-kit-for-globtek-power-supplies-cable-assemblies

PROPRIETARY INFORMATION
PROPRIETARY OF GLOBTEK, INC. ANY REPRODUCTION, DISCLOSURE OR USE OF THIS DRAWING, IN WHOLE OR IN PART, IS HEREBY PROHIBITED EXCEPT AS SPECIFIED IN WRITING BY GLOBTEK, INC. © GlobTek, Inc. 2017 - 2022
guest /09/15/2022 7:58:25 PM CLONED FROM RR9LH3300LCPNACIMRVB

GlobTek, Inc.
www.globtek.com
186 Veterans Drive,
Northvale, NJ 07647
Tel. (201) 784-1000
Fax (201) 784-0111

Drawing Title: GTM96300-3619.5-1.5-R3A, Medical/ICT/ITE/Household use Power Supply, Efficiency Level: USA DOE Level VI / Eco-design Directive 2009/125/EC, (EU) 2019/1782, Case Color/Style: GlobTek Black, Wall Plug-in+Desktop Combination, Regulated Switchmode AC-DC Power Supply AC Adaptor, Input Rating: 100-240V~, 50-60 Hz, IEC 60320/C6 , Output Rating: 36W, 18.0V@2.0A, Output Configuration: 1500 mm, 18/2 Cond, Round Black, T-plug system (includes 5.5x2.5, 5.5x2.1, 3.5x1.3mm plugs in each kit), Ferrite: None, GlobTek Black, GT Cord # C3775, Pin Out: Polarity Configuration T00 All plugs are Medical Grade, Locking, Polarized once installed, and single use only. Product demonstration link: https://en.globtek.com/news/t00-changeable-output-plug-system-for-power-supplies MOLDED CONNECTORS AVAILABLE, Blades/Input Cord: R-Series 5-15P North America, Approvals: CCC (up to 48V only); CB 62368; CB 60950; ETL 1310; ETL; ETL; 230V CoC Tier 2; EAC; ETL 62368; UKCA; LPS 62368; UL 1310; Conforms to 62368-1; RCM; cETLus 60950-1; UL 1310; cETLus 60950-1; cETLus 60601; Morocco; RCM; S-Mark 62368; IRAM; NOM (5V only); Korea (5, 5.4, 5.95, 7.5V Only); CAN ICES-3; FCC; cETLus 60601-1 3rd; CB 60335; IP40; LPS 60950; Class I; Fuse 60335; Book 60601; cETLus 60950; Fuse 60335; S-Mark IEC/EN 60601-1; PSE; PSE; PSE;

Model No. GTM96300-3619.5-1.5-R3A

Part No./Ordering No. RR9LH2000T00NACIMR6B | Rev B

LABEL:L-1470

LABEL P/N:	ISO 15223 medical device compliant label
MATERIAL:	Flat Thermal Transfer, Imprintable, Polyester Label and/or Pad Printed and/or Molded, and/or Laser Engraved in the case
BACKGROUND COLOR:	Black if housing is Black, White or Silver if housing is White or Gray.
TEXT COLOR:	White or Silver if label is Black Background for Black housing. Black if label is White or Silver background and Housing is White or Gray.
LABEL WIDTH (mm):	37.5
LABEL HEIGHT (mm):	33.5
SPECIAL BARCODE LABEL MATERIAL:	No

Below is the minimum information which will appear on the label. NOTE: in the logo area additional/actual positioning of symbols and text is subjected to change as per agency updates/requirements or additional model approvals become available.
Agency logos may be in Regulatory Certifications/Label Markings area on the label or molded into the case housing outside the label area. Information will be shown via Label and/or Pad Printed and/or Molded in the case.

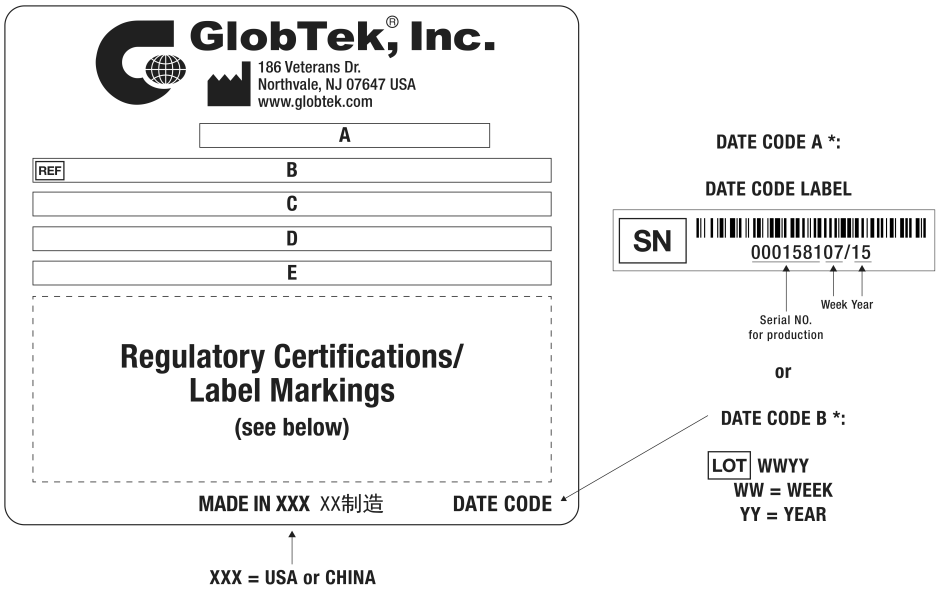

A=Medical/ICT/ITE/Household use Power Supply
B=P/N: (料号) RR9LH2000T00NACIMR6B
C=Model (型号) GTM96300-3619.5-1.5-R3A
D=Input (输入)100-240V~, 50-60 Hz, 1.0A
E=Output (输出)18.0 V ⎓ 2.0 A, 36.0W

PROPRIETARY INFORMATION
PROPRIETARY OF GLOBTEK, INC. ANY REPRODUCTION, DISCLOSURE OR USE OF THIS DRAWING, IN WHOLE OR IN PART, IS HEREBY PROHIBITED EXCEPT AS SPECIFIED IN WRITING BY GLOBTEK, INC. © GlobTek, Inc. 2017 - 2022
guest /09/15/2022 7:58:25 PM CLONED FROM RR9LH3300LCPNACIMRVB

AGENCY ONLINE DOCUMENTS	http://www.globtek.info/certs/GTM96300-TZ/
CE EC-Declaration for Medical	http://globtek.force.com/models/ec_declaration_product?id=01ta0000007dqBk&m=1
CE EC-Declaration for Industrial/Commercial/ITE	http://globtek.force.com/models/ec_declaration_product?id=01ta0000007dqBk&i=2
CE EC-Declaration for Household	http://globtek.force.com/models/ec_declaration_product?id=01ta0000007dqBk&h=2
UKCA-Declaration for Medical	http://globtek.force.com/models/ukca_declaration_product?id=01ta0000007dqBk&m=1
UKCA-Declaration for Industrial/Commercial/ITE	http://globtek.force.com/models/ukca_declaration_product?id=01ta0000007dqBk&i=2
UKCA-Declaration for Household	http://globtek.force.com/models/ukca_declaration_product?id=01ta0000007dqBk&h=2
Morocco SDoC Declaration	https://globtek.secure.force.com/models/Morocco_SDoC_Declaration?id=a0Oa000000Mm3T6EAJ
RoHS/RoHS3 Declaration	https://www.globtek.com/pdf/rohs_cert/01ta0000007dqBkAAI
REACH Declaration	https://www.globtek.com/pdf/iso_certificates/REACH.pdf
Conflict Minerals Declaration	https://www.globtek.com/pdf/conflict-minerals.pdf
Prop 65 Statement	https://en.globtek.com/prop-65-statement.pdf

IPXY rating is based on 3rd party testing and customers should check suitability and test system level IPXY rating before ordering.

Regulatory Certifications/Label Markings

Below follows a link to the latest regulatory certifications and marks for this specific product. National standards as well as certification schemes are constantly changing and so is the set of certification marks and symbols applicable to this product. Various standards, marks and symbols, and certificates are subject to change at any time without notice.

Additional standards or unique country certifications are available upon request. Please contact Globtek to request a quotation.

LATEST PRODUCT/MODEL CERTIFICATIONS:	https://www.globtek.com/datasheet/w71082
AGENCY ONLINE DOCUMENTS:	http://www.globtek.info/certs/GTM96300-TZ/

(F2) Isolated Functional Earth for GTM96 series, Improved EMC

Polarity Configuration T00 All plugs are Medical Grade, Locking, Polarized once installed, and single use only.
Product demonstration link: https://en.globtek.com/news/t00-changeable-output-plug-system-for-power-supplies
MOLDED CONNECTORS AVAILABLE

PROPRIETARY INFORMATION
PROPRIETARY OF GLOBTEK, INC. ANY REPRODUCTION, DISCLOSURE OR USE OF THIS DRAWING, IN WHOLE OR IN PART, IS HEREBY PROHIBITED EXCEPT AS SPECIFIED IN WRITING BY GLOBTEK, INC. © GlobTek, Inc. 2017 - 2022
guest /09/15/2022 7:58:25 PM CLONED FROM RR9LH3300LCPNACIMRVB

PACKAGING

Packing Spec P/N:	Cell packing for DT plug model with T00 plug and manual
Box Qty:	36
Gift Box Size (mm):	Egg Crate
Gift Box Color:	White
Master Carton Size (mm):	442 x 330 x 275
Master Carton Cubic Volume (m^3):	0.04
Master GW (Kg):	15.2 kg
BLADES INCLUDED:	R-NA-3(R): R-Series 5-15P North America
BLADE/CORD INSTALLED:	R-NA-3(R): R-Series 5-15P North America
USER MANUAL*:	809-DESKTOPUSERMANUAL on A4 paper
USER MANUAL WEB LINK:	https://en.globtek.com/pdf/809-DESKTOPUSERMANUAL.jpg

* This specification sheet is considered the user manual for all applications. It is expected that the buyer of this product will use it to formulate their own user manual for their end product and a user manual specifically for the power adapter is not usually required. If a user manual is not specifically listed above then none will be provided with this unit.

If specific packaging is required, this section must specify all requirements and note “no exceptions”. If this section does not specify packaging, it is subject to change without notice at GlobTek’s discretion.

PROPRIETARY INFORMATION
PROPRIETARY OF GLOBTEK, INC. ANY REPRODUCTION, DISCLOSURE OR USE OF THIS DRAWING, IN WHOLE OR IN PART, IS HEREBY PROHIBITED EXCEPT AS SPECIFIED IN WRITING BY GLOBTEK, INC. © GlobTek, Inc. 2017 - 2022
guest /09/15/2022 7:58:25 PM CLONED FROM RR9LH3300LCPNACIMRVB

GlobTek, Inc.
www.globtek.com
186 Veterans Drive,
Northvale, NJ 07647
Tel. (201) 784-1000
Fax (201) 784-0111

Drawing Title: GTM96300-3619.5-1.5-R3A, Medical/ICT/ITE/Household use Power Supply, Efficiency Level: USA DOE Level VI / Eco-design Directive 2009/125/EC, (EU) 2019/1782, Case Color/Style: GlobTek Black, Wall Plug-in+Desktop Combination, Regulated Switchmode AC-DC Power Supply AC Adaptor, Input Rating: 100-240V~, 50-60 Hz, IEC 60320/C6 , Output Rating: 36W, 18.0V@2.0A, Output Configuration: 1500 mm, 18/2 Cond, Round Black, T-plug system (includes 5.5x2.5, 5.5x2.1, 3.5x1.3mm plugs in each kit), Ferrite: None, GlobTek Black, GT Cord # C3775, Pin Out: Polarity Configuration T00 All plugs are Medical Grade, Locking, Polarized once installed, and single use only. Product demonstration link: https://en.globtek.com/news/t00-changeable-output-plug-system-for-power-supplies MOLDED CONNECTORS AVAILABLE, Blades/Input Cord: R-Series 5-15P North America, Approvals: CCC (up to 48V only); CB 62368; CB 60950; ETL 1310; ETL; ETL; 230V CoC Tier 2; EAC; ETL 62368; UKCA; LPS 62368; UL 1310; Conforms to 62368-1; RCM; cETLus 60950-1; UL 1310; cETLus 60950-1; cETLus 60601; Morocco; RCM; S-Mark 62368; IRAM; NOM (5V only); Korea (5, 5.4, 5.95, 7.5V Only); CAN ICES-3; FCC; cETLus 60601-1 3rd; CB 60335; IP40; LPS 60950; Class I; Fuse 60335; Book 60601; cETLus 60950; Fuse 60335; S-Mark IEC/EN 60601-1; PSE; PSE; PSE;

Model No. GTM96300-3619.5-1.5-R3A

Part No./Ordering No. RR9LH2000T00NACIMR6B | Rev B

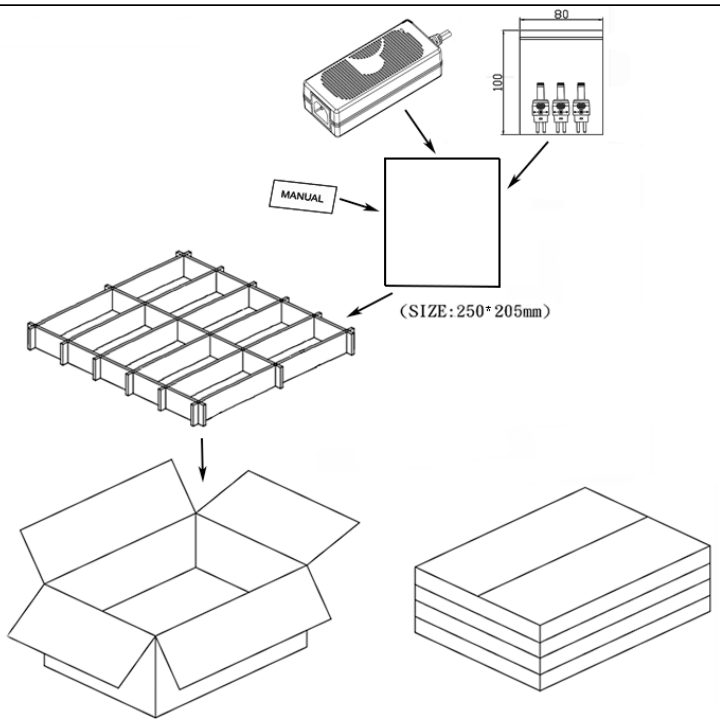

Manual for T00-plug: WHITE BACKGROUND WITH BLACK TEXT

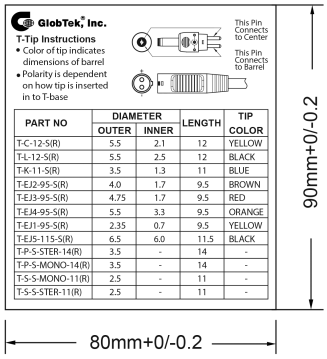

PART NO	DIAMETER		LENGTH	TIP
	OUTER	INNER		COLOR
T-C-12-S(R)	5.5	2.1	12	YELLOW
T-L-12-S(R)	5.5	2.5	12	BLACK
T-K-11-S(R)	3.5	1.3	11	BLUE
T-EJ2-95-S(R)	4.0	1.7	9.5	BROWN
T-EJ3-95-S(R)	4.75	1.7	9.5	RED
T-EJ4-95-S(R)	5.5	3.3	9.5	ORANGE
T-EJ1-95-S(R)	2.35	0.7	9.5	YELLOW
T-EJ5-115-S(R)	6.5	6.0	11.5	BLACK
T-P-S-STER-14(R)	3.5	-	14	-
T-P-S-MONO-14(R)	3.5	-	14	-
T-S-S-MONO-11(R)	2.5	-	11	-
T-S-S-STER-11(R)	2.5	-	11	-

SHEET A

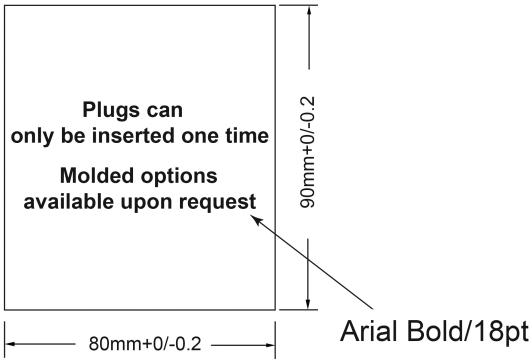

SHEET B

PROPRIETARY INFORMATION
PROPRIETARY OF GLOBTEK, INC. ANY REPRODUCTION, DISCLOSURE OR USE OF THIS DRAWING, IN WHOLE OR IN PART, IS HEREBY PROHIBITED EXCEPT AS SPECIFIED IN WRITING BY GLOBTEK, INC. © GlobTek, Inc. 2017 - 2022
guest /09/15/2022 7:58:25 PM CLONED FROM RR9LH3300LCPNACIMRVB

INSTRUCTIONS TO THE OEM SYSTEMS ENGINEER

It is the responsibility of the OEM systems engineer to provide the end system user instructions and warnings for the use of this product in the end system.

If an input cord is required for this product, AC Mains voltage should be provided to the power supply by a power supply cord approved to the national standards of the country in which it will be used.

This product is not designed to be repaired. No serviceable parts inside. A blown internal fuse is an indication of catastrophic failure of circuit component(s). If a Failure Analysis is required for a failed power supply/battery charger, please return the damaged unit to GlobTek for an accurate determination of the root cause of the failure.

EMC Compliance of the complete OEM product, including the GlobTek power supply/battery charger needs to be verified by the OEM systems engineer.

INSTRUCTION SHEET

N/A

PROPRIETARY INFORMATION

PROPRIETARY OF GLOBTEK, INC. ANY REPRODUCTION, DISCLOSURE OR USE OF THIS DRAWING, IN WHOLE OR IN PART, IS HEREBY PROHIBITED EXCEPT AS SPECIFIED IN WRITING BY GLOBTEK, INC. © GlobTek, Inc. 2017 - 2022

guest /09/15/2022 7:58:25 PM CLONED FROM RR9LH3300LCPNACIMRVB