Smarter. Greener. Together.

Industrial Automation Headquarters

Delta Electronics, Inc.
Taoyuan Technology Center
No.18, Xinglong Rd., Taoyuan City,
Taoyuan County 33068, Taiwan
TEL: 886-3-362-6301 / FAX: 886-3-371-6301

Asia

Delta Electronics (Jiangsu) Ltd.
Wujiang Plant 3
1688 Jiangxing East Road,
Wujiang Economic Development Zone
Wujiang City, Jiang Su Province, P.R.C. 215200
TEL: 86-512-6340-3008 / FAX: 86-769-6340-7290

Delta Greentech (China) Co., Ltd.
238 Min-Xia Road, Pudong District,
ShangHai, P.R.C. 201209
TEL: 86-21-58635678 / FAX: 86-21-58630003

Delta Electronics (Japan), Inc.
Tokyo Office
2-1-14 Minato-ku Shibadaimon,
Tokyo 105-0012, Japan
TEL: 81-3-5733-1111 / FAX: 81-3-5733-1211

Delta Electronics (Korea), Inc.
1511, Byucksan Digital Valley 6-cha, Gasan-dong,
Geumcheon-gu, Seoul, Korea, 153-704
TEL: 82-2-515-5303 / FAX: 82-2-515-5302

Delta Electronics Int'l (S) Pte Ltd.
4 Kaki Bukit Ave 1, #05-05, Singapore 417939
TEL: 65-6747-5155 / FAX: 65-6744-9228

Delta Electronics (India) Pvt. Ltd.
Plot No 43 Sector 35, HSIIDC
Gurgaon, PIN 122001, Haryana, India
TEL : 91-124-4874900 / FAX : 91-124-4874945

Americas

Delta Products Corporation (USA)
Raleigh Office
P.O. Box 12173,5101 Davis Drive,
Research Triangle Park, NC 27709, U.S.A.
TEL: 1-919-767-3800 / FAX: 1-919-767-8080

Delta Greentech (Brasil) S.A.
Sao Paulo Office
Rua Itapeva, 26 - 3° andar Edificio Itapeva One-Bela Vista
01332-000-São Paulo-SP-Brazil
TEL: 55 11 3568-3855 / FAX: 55 11 3568-3865

Europe

Deltronics (The Netherlands) B.V.
Eindhoven Office
De Witbogt 20, 5652 AG Eindhoven, The Netherlands
TEL: 31-40-2592850 / FAX: 31-40-2592851

IA-0999420-02

*We reserve the right to change the information in this catalogue without prior notice.

2019-08-15

Delta PLC/HMI Cable Selection Guide

www.deltaww.com

Smarter. Greener. Together.

Delta PLC/HMI Cable Selection Guide

Revision History

Version	Revision	Date
1st	The first version is published.	2015/11/13
2nd	1. Chapter 1: UC-PRG050-02A information is deleted. 2. Section 2.5: AS64AN02T-A pin definition is updated. 3. Section 3.3 &3.4: UC-EMCXXX-02B information is added; Section 3.5: CANopen and DMCNET pin definition is updated and UC-EMCXXX-02B is added. 4. Appendix A: UC-PRG050-02A is deleted and UC-EMCXXX-02B is added.	2019/08/15

Delta PLC/HMI Cable Selection Guide

Table of Contents

Preface I

Chapter 1 Cables for PLC Programming and Serial Communication 1-1

1.1 DVP-ES2/EX2 Series 1-3

1.2 DVP-ES/EX Series 1-5

1.3 DVP-EC3 Series 1-6

1.4 DVP-SS2 Series 1-9

1.5 DVP-SX Series 1-10

1.6 DVP-SX2 Series 1-11

1.6.1 DVP-SX2 Series PLCs 1-11

1.6.2 DVP-SX2 Series PLCs and Communication Modules 1-12

1.7 DVP-SV2 Series 1-13

1.7.1 DVP-SV2 Series PLCs 1-13

1.7.2 DVP-SV2 Series PLCs and Communication Modules 1-14

1.8 DVP-SA2 Series 1-15

1.8.1 DVP-SA2 Series PLCs 1-15

1.8.2 DVP-SA2 Series PLCs and Communication Modules 1-16

1.9 DVP-SE Series Series 1-17

1.9.1 DVP-SE Series PLCs 1-17

1.9.2 DVP-SE Series PLCs and Communication Modules 1-18

1.10 DVP-EH3 Series 1-19

1.10.1 DVP-EH3 Series PLCs 1-19

1.10.2 DVP-EH3 Series PLCs and Function Cards 1-20

1.10.3 DVP-EH3 Series PLCs and Communication Modules 1-21

1.11 DVP-PM Series 1-22

1.11.1 DVP-PM Series PLCs 1-22

1.11.2 DVP-PM Series PLCs and Function Cards 1-23

1.12 DVP-MC Series 1-24

1.13 DVP Series PLCs and the Delta Machine Vision System 1-25

1.14 AH500 Series 1-26

1.14.1 CPUs (AHCPU5XX-EN) 1-26

1.14.2 AHCPU5XX-EN and Communication Modules 1-27

1.14.3 AHCPU5XX-EN and the Delta Machine Vision System 1-28

1.14.4 CPUs (AHCPU5XX-RS2) 1-29
1.14.5 AHCPU5XX-RS2 and Communication Modules 1-30
1.14.6 AHCPU5XX-RS2 and the Delta Machine Vision System 1-31
1.14.7 Motion ControlModules.....1-32
1.15 AS300 Series 1-33
1.15.1 AS300 Series PLCs 1-33
1.15.2 AS300 Series PLCs and Function Cards 1-34
1.15.3 AS300 Series PLCs and the Delta Machine Vision System 1-35
1.16 TP Series 1-36
1.17 DOP-B Series 1-43
1.18 DOP-W Series 1-57
1.19 DOP Series HMIs and the Delta Machine Vision System (RS-232) 1-59
1.20 DOP Series HMIs and the Delta Machine Vision System (Ethernet) 1-60
1.21 Cable Models 1-61
1.22 Descriptions of Cable Models 1-80

Chapter 2 Extension Cables for I/O Modules 2-1
2.1 DVP Series Slim PLCs 2-2
2.1.1 DVP32SM11N 2-2
2.1.2 DVP32SN11TN 2-2
2.2 AH500 Series 2-3
2.2.1 AH32AM10N-5B 2-3
2.2.2 AH32AM10N-5C 2-3
2.2.3 AH64AM10N-5C 2-4
2.2.4 AH32AN02T-5B 2-5
2.2.5 AH32AN02P-5B 2-5
2.2.6 AH32AN02T-5C 2-6
2.2.7 AH32AN02P-5C 2-6
2.2.8 AH64AN02T-5C 2-7
2.2.9 AH64AN02P-5C 2-8
2.2.10 AH20MC-5A 2-9
2.2.11 AH10EMC-5A/AH10DMC-5A/AH10CMC-5A/AH10PMC-5A 2-9
2.2.12 AH10PM-5A 2-10
2.2.13 AH15PM-5A 2-10
2.2.14 AH04HC-5A 2-11
2.2.15 AH500 Series Main Backplanes 2-12
2.3 AS300 Series 2-13
2.3.1 AS332T-A/AS332P-A/AS324MT-A 2-13

2.3.2 AS32AM10N-A 2-13
2.3.3 AS32AN02T-A 2-14
2.3.4 AS64AM10N-A 2-14
2.3.5 AS64AN02T-A 2-15
2.4 Cable Models 2-16
2.5 Descriptions of Cable Models 2-28

Chapter 3 Motion Control Cables 3-1
3.1 CANopen Motion Control Cables 3-2
3.1.1 DVP-MC Series (DVP10MC11T) 3-2
3.1.2 DVP-PM Series 3-3
3.2 DMCNET Motion Control Cables 3-4
3.2.1 AH20MC-5A 3-4
3.3 EtherCAT Motion Control Cables 3-6
3.3.1 AH10EMC-5A 3-6
3.4 Cable Models 3-7
3.5 Descriptions of Cable Models 3-9

Chapter 4 Networking Cables 4-1
4.1 CANopen Communication 4-2
4.1.1 Applicable CANopen Models 4-2
4.1.2 Specifications Related to CANopen Communication 4-3
4.1.3 Terminator 4-6
4.2 PROFIBUS DP Communication 4-8
4.2.1 Applicable PROFIBUS DP Models 4-9
4.2.2 Specifications Related to PROFIBUS DP Communication 4-9
4.3 DeviceNet Communication 4-11
4.3.1 Applicable DeviceNet Models 4-11
4.3.2 Specifications Related to DeviceNet 4-12
4.3.3 Terminator 4-14

Appendix A Cable Table A-1
A.1 Cable Table A-2

Appendix B USB Driver B-1
B.1 Installing the UC-PRG020-12A/IFD6500 Driver B-2

Preface

Delta PLC/HMI Cable Selection Guide helps users rapidly get the information about the cables suitable to be applied among the communication interfaces of numerous PLCs/HMIs. Cables are classified into four types in this manual. They are cables for PLC programming and serial communication, extension cables for I/O modules, motion control cables, and networking cables. These four types of cables are introduced in Chapter 1~Chapter 4 in detail. The cable models introduced and related descriptions are listed in Appendix A for reference.

MEMO

1

Chapter 1 Cables for PLC Programming and Serial Communication

Table of Contents

1.1 DVP-ES2/EX2 Series 1-3

1.2 DVP-ES/EX Series 1-5

1.3 DVP-EC3 Series 1-6

1.4 DVP-SS2 Series 1-9

1.5 DVP-SX Series 1-10

1.6 DVP-SX2 Series 1-11

1.6.1 DVP-SX2 Series PLCs 1-11

1.6.2 DVP-SX2 Series PLCs and Communication Modules 1-12

1.7 DVP-SV2 Series 1-13

1.7.1 DVP-SV2 Series PLCs 1-13

1.7.2 DVP-SV2 Series PLCs and Communication Modules 1-14

1.8 DVP-SA2 Series 1-15

1.8.1 DVP-SA2 Series PLCs 1-15

1.8.2 DVP-SA2 Series PLCs and Communication Modules 1-16

1.9 DVP-SE Series 1-17

1.9.1 DVP-SE Series PLCs 1-17

1.9.2 DVP-SE Series PLCs and Communication Modules 1-18

1.10 DVP-EH3 Series 1-19

1.10.1 DVP-EH3 Series PLCs 1-19

1.10.2 DVP-EH3 Series PLCs and Function Cards 1-20

1.10.3 DVP-EH3 Series PLCs and Communication Modules 1-21

1.11 DVP-PM Series 1-22

1.11.1 DVP-PM Series PLCs 1-22

1.11.2 DVP-PM Series PLCs and Function Cards 1-23

1.12 DVP-MC Series 1-24

1.13 DVP Series PLCs and the Delta Machine Vision System 1-25

1.14 AH500 Series 1-26

1.14.1 CPUs (AHCPU5XX-EN) 1-26

1.14.2 AHCPU5XX-EN and Communication Modules..... 1-27

1.14.3 AHCPU5XX-EN and the Delta Machine Vision System 1-28

1.14.4 CPUs (AHCPU5XX-RS2) 1-29

1.14.5 AHCPU5XX-RS2 and Communication Modules..... 1-30

1.14.6 AHCPU5XX-RS2 and the Delta Machine Vision System 1-31

1.14.7 Motion Control Modules 1-32

1.15 AS300 Series..... 1-33

1.15.1 AS300 Series PLCs..... 1-33

1.15.2 AS300 Series PLCs and Function Cards..... 1-34

1.15.3 AS300 Series PLCs and the Delta Machine Vision System 1-35

1.16 TP Series..... 1-36

1.17 DOP-B Series..... 1-43

1.18 DOP-W Series..... 1-57

1.19 DOP Series HMIs and the Delta Machine Vision System (RS-232) 1-59

1.20 DOP Series HMIs and the Delta Machine Vision System (Ethernet) 1-60

1.21 Cable Models..... 1-61

1.22 Descriptions of Cable Models 1-80

1.1 DVP-ES2 / EX2 Series

DVP-ES2/EX2 series (DVP16ES200R, DVP16ES200T, DVP20EX200R, DVP20EX200T, DVP24ES200R, DVP24ES200T, DVP30EX200R, DVP30EX200T, DVP32ES200R, DVP32ES200T, DVP32ES211T, DVP40ES200R, DVP40ES200RM, DVP40ES200T, DVP58ES200R, DVP58ES200T, DVP60ES200R, DVP60ES200T)

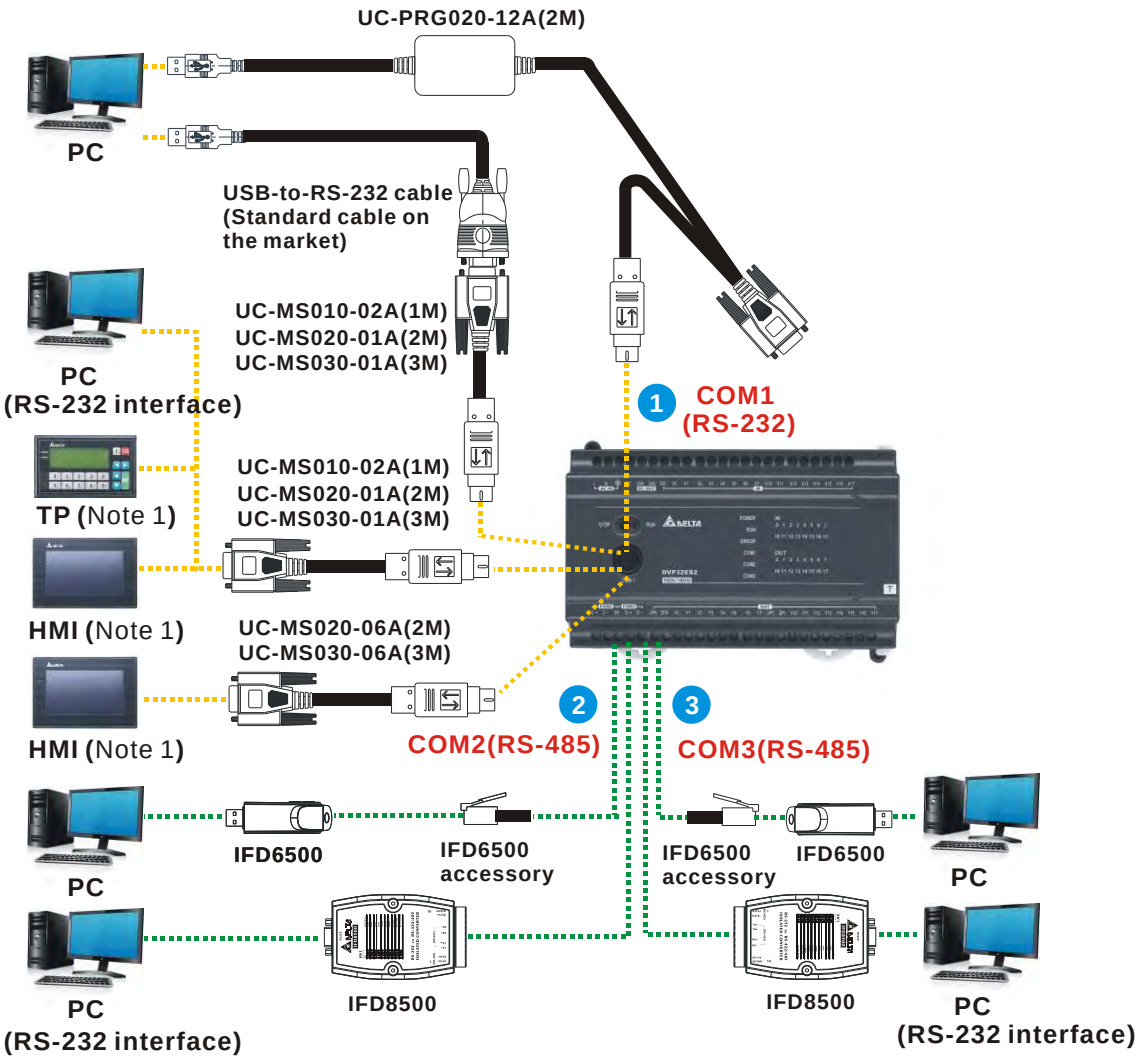

Note 1: Please refer to section 1.16, section 1.17, and section 1.18 for more information about TP/HMI models.

Note 2: Please refer to section 1.21 for more information about 1, 2, 3, etc.

DVP-ES2 series (DVP32ES200RC, DVP32ES200TC)

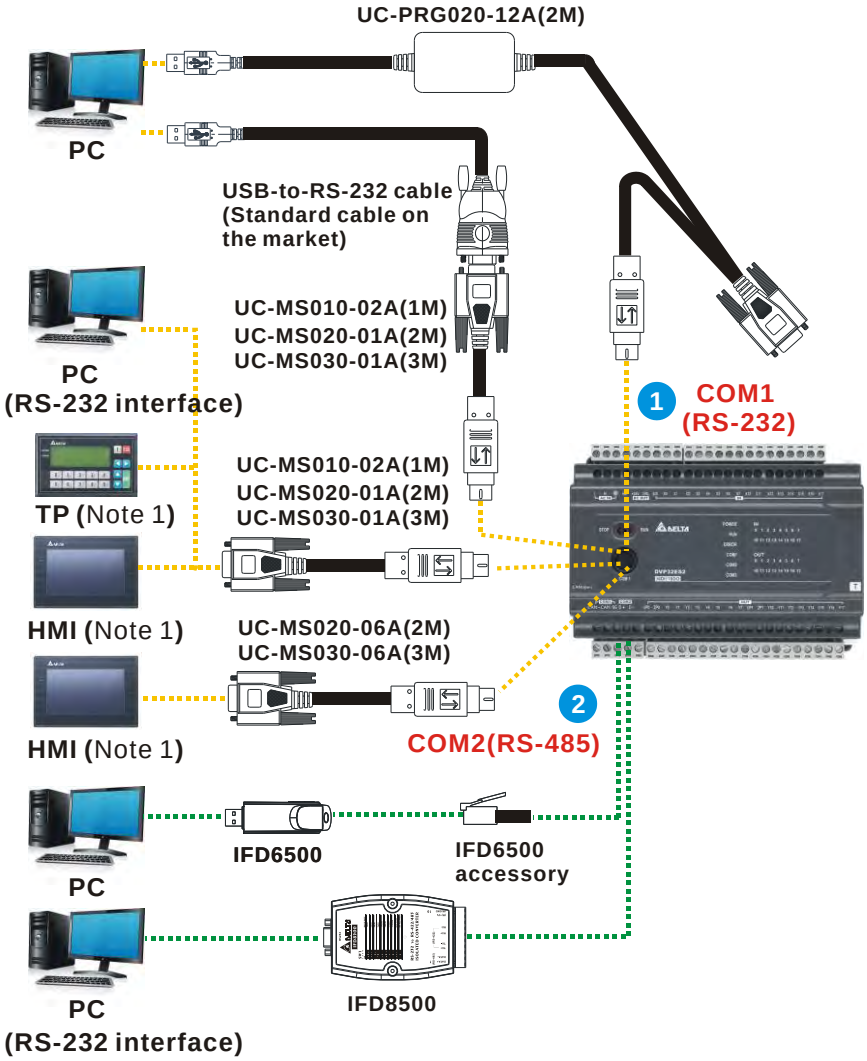

Note 1: Please refer to section 1.16, section 1.17, and section 1.18 for more information about TP/HMI models.

Note 2: Please refer to section 1.21 for more information about 1, 2, 3, etc.

1.2 DVP-ES/EX Series

DVP-ES/EX series (DVP14ES00R2, DVP14ES00T2, DVP20EX00R2, DVP20EX00T2, DVP24ES00R2, DVP24ES00T2, DVP30ES00R2, DVP30ES00T2, DVP32ES00R2, DVP32ES00T2, DVP40ES00R2, DVP40ES00T2, DVP60ES00R2, DVP60ES00T2)

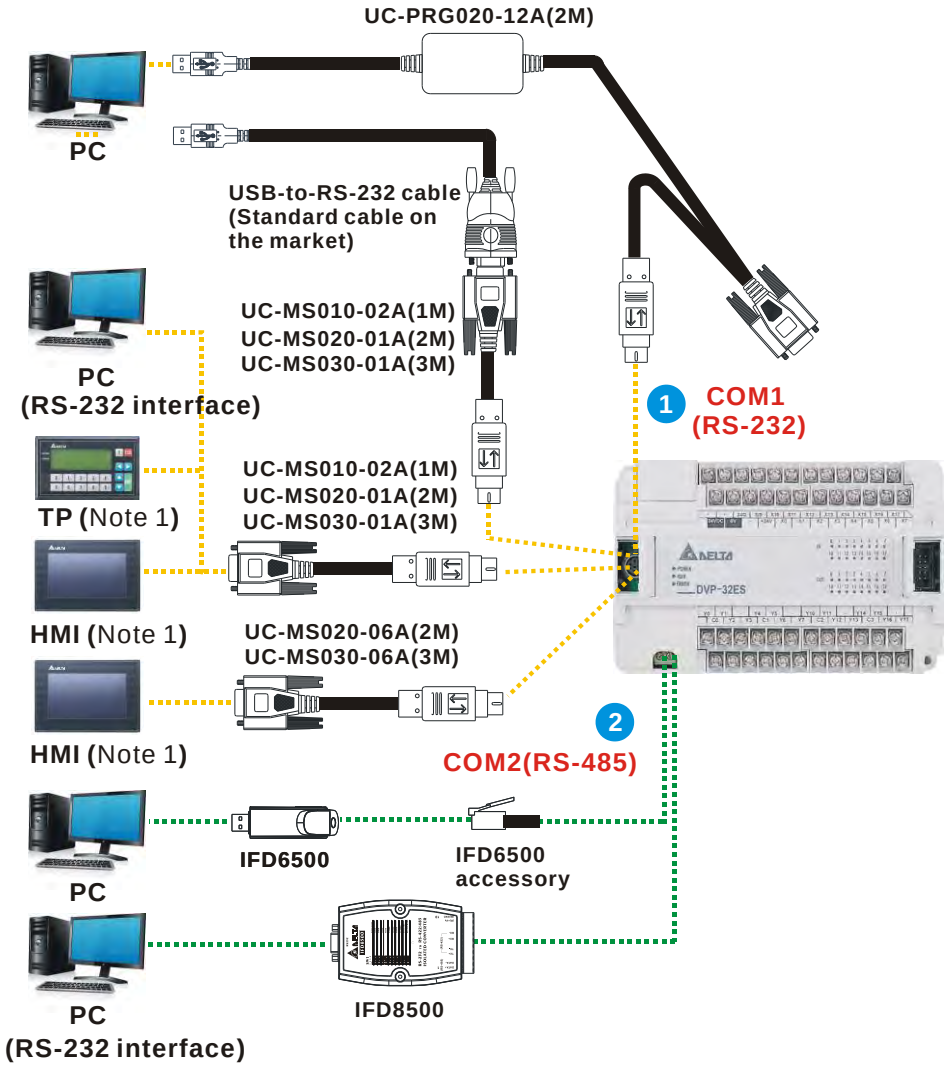

Note 1: Please refer to section 1.16, section 1.17, and section 1.18 for more information about TP/HMI models.

Note 2: Please refer to section 1.21 for more information about 1, 2, 3, etc.

1.3 DVP-EC3 Series

DVP-EC3 series (DVP10EC00R3, DVP10EC00T3, DVP14EC00R3, DVP14EC00T3)

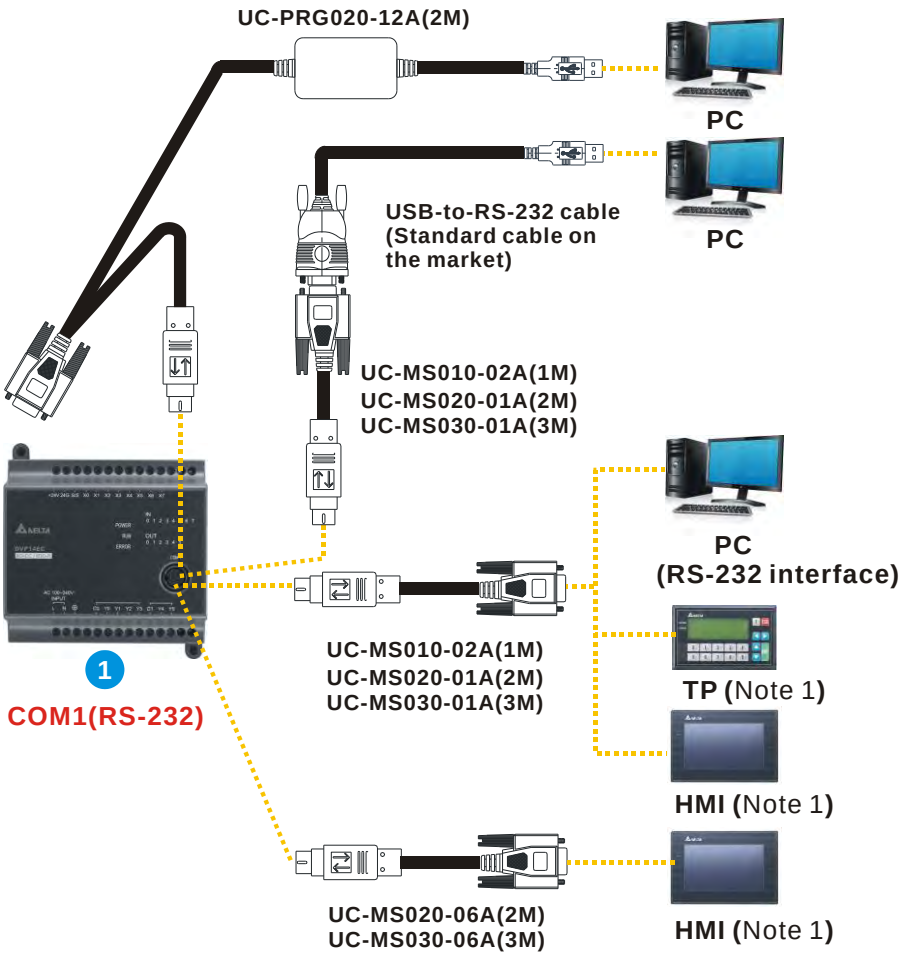

Note 1: Please refer to section 1.16, section 1.17, and section 1.18 for more information about TP/HMI models.

Note 2: Please refer to section 1.21 for more information about 1, 2, 3, etc.

DVP-EC3 series (DVP16EC00R3, DVP16EC00T3, DVP20EC00R3, DVP20EC00T3, DVP24EC00R3, DVP24EC00T3, DVP30EC00R3, DVP30EC00T3, DVP32EC00R3, DVP32EC00T3)

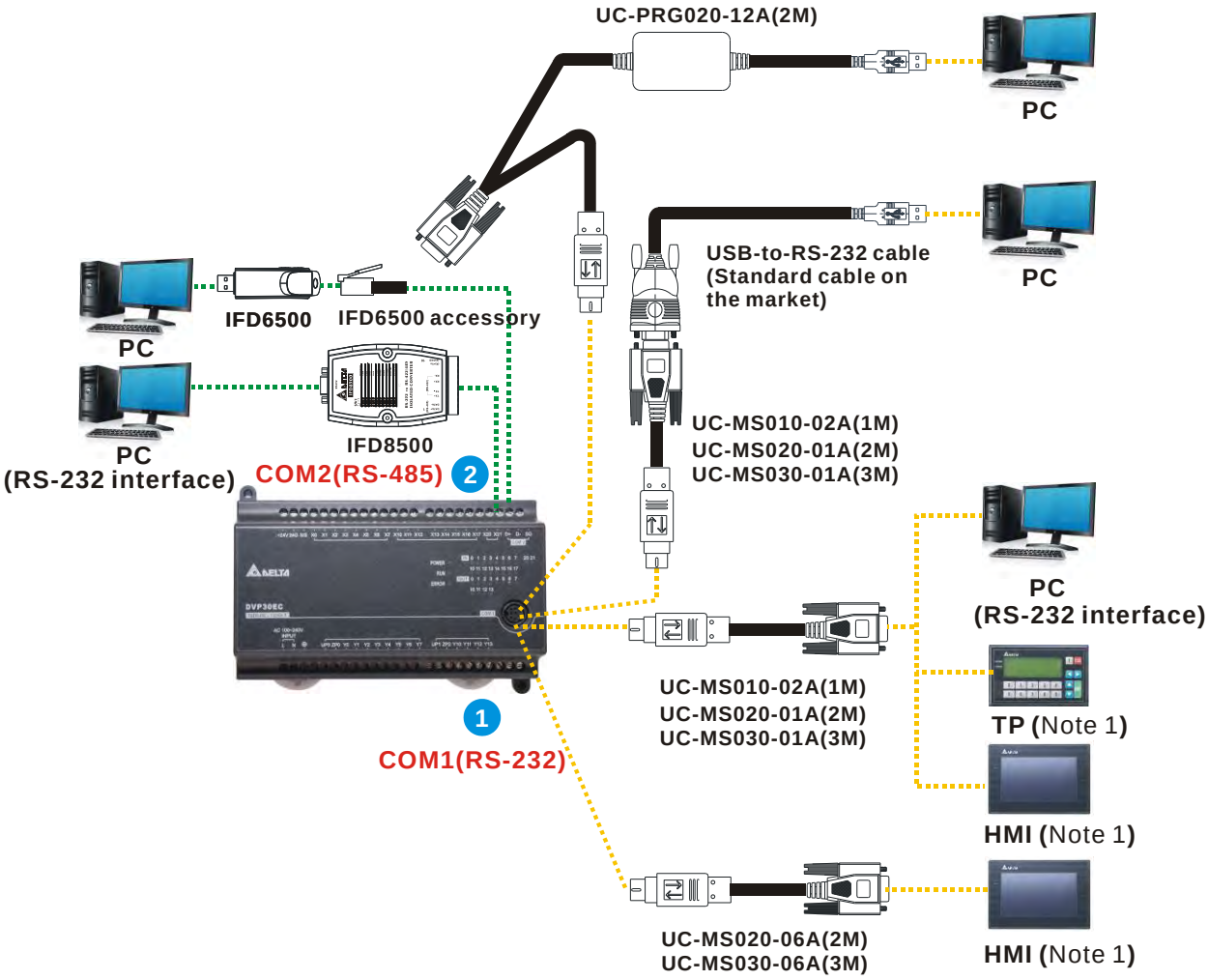

Note 1: Please refer to section 1.16, section 1.17, and section 1.18 for more information about TP/HMI models.

Note 2: Please refer to section 1.21 for more information about 1, 2, 3, etc.

DVP-EC3 series (DVP40EC00R3, DVP40EC00T3, DVP48EC00R3, DVP48EC00T3, DVP60EC00R3, DVP60EC00T3)

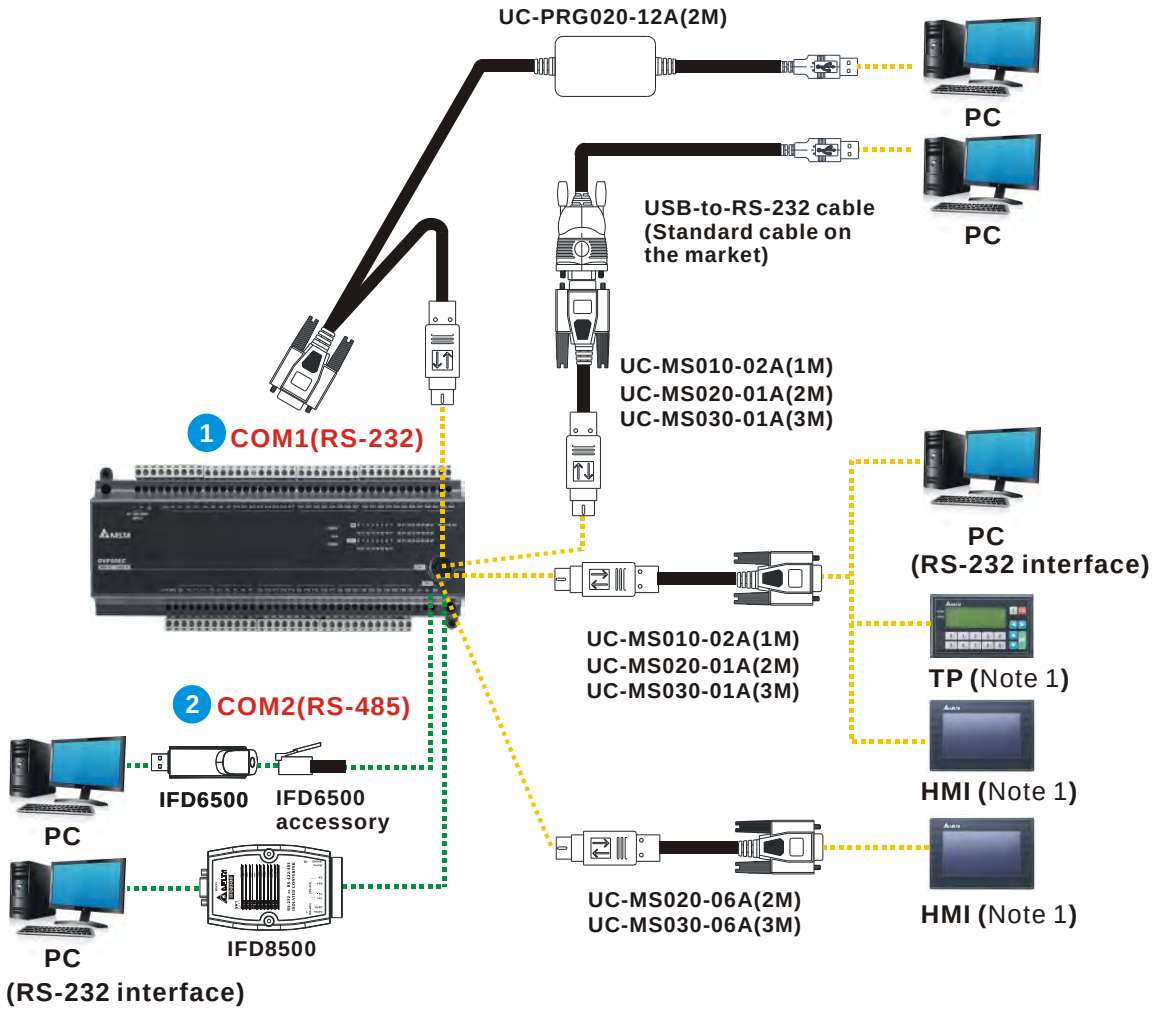

Note 1: Please refer to section 1.16, section 1.17, and section 1.18 for more information about TP/HMI models.

Note 2: Please refer to section 1.21 for more information about 1, 2, 3, etc.

1.4 DVP-SS2 Series

DVP-SS2 series (DVP14SS211R, DVP14SS211T, DVP12SS211S)

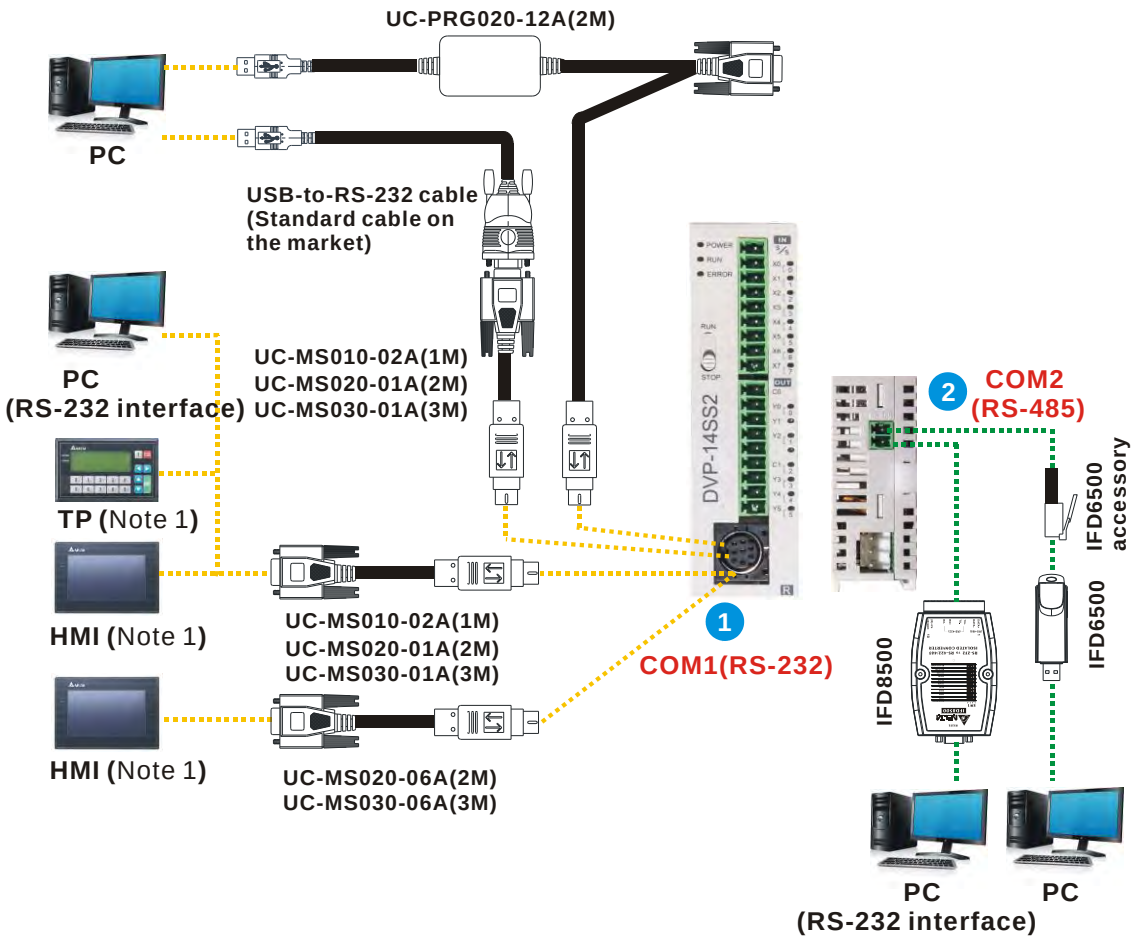

Note 1: Please refer to section 1.16, section 1.17, and section 1.18 for more information about TP/HMI models.

Note 2: Please refer to section 1.21 for more information about 1, 2, 3, etc.

1.5 DVP-SX Series

DVP-SX series (DVP10SX11R, DVP10SX11T)

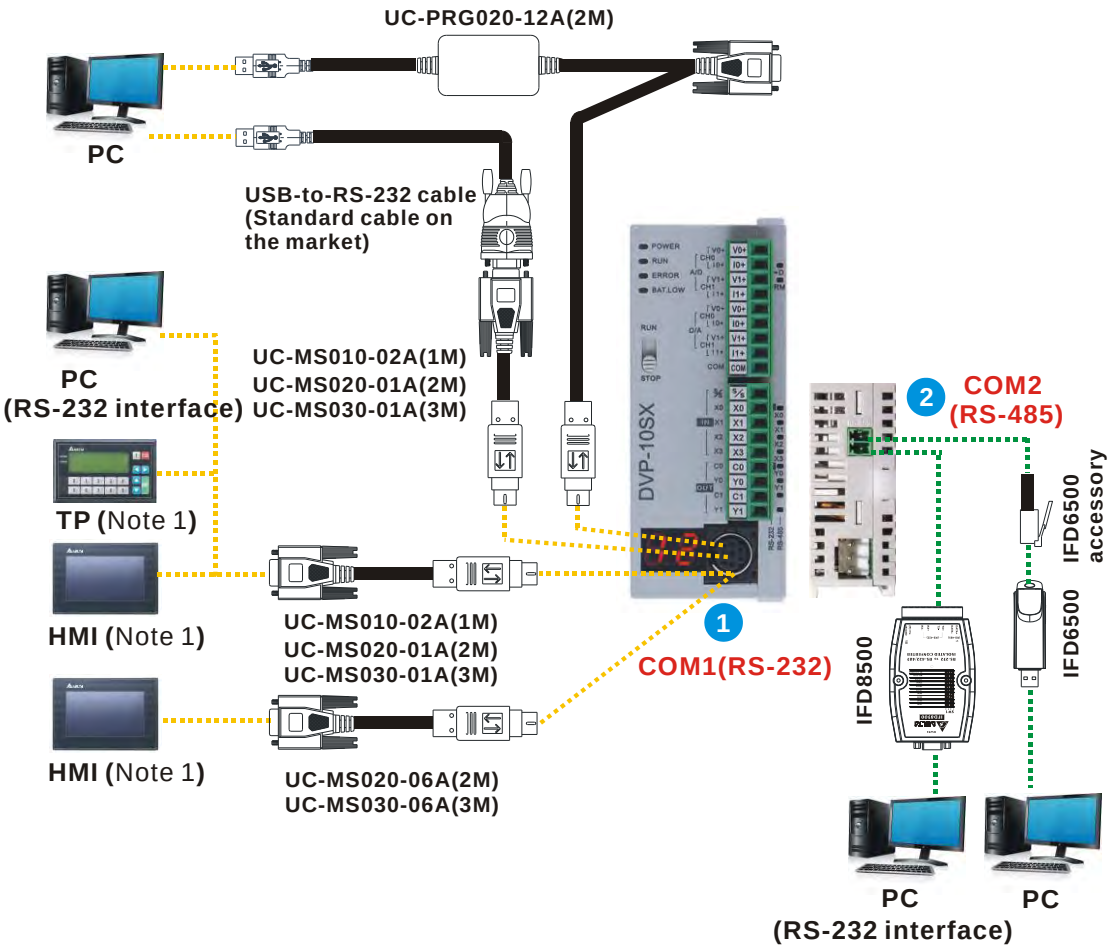

Note 1: Please refer to section 1.16, section 1.17, and section 1.18 for more information about TP/HMI models.

Note 2: Please refer to section 1.21 for more information about 1, 2, 3, etc.

1.6 DVP-SX2 Series

1.6.1 DVP-SX2 Series PLCs

Applicable model: DVP20SX211R, DVP20SX211T, DVP20SX211S

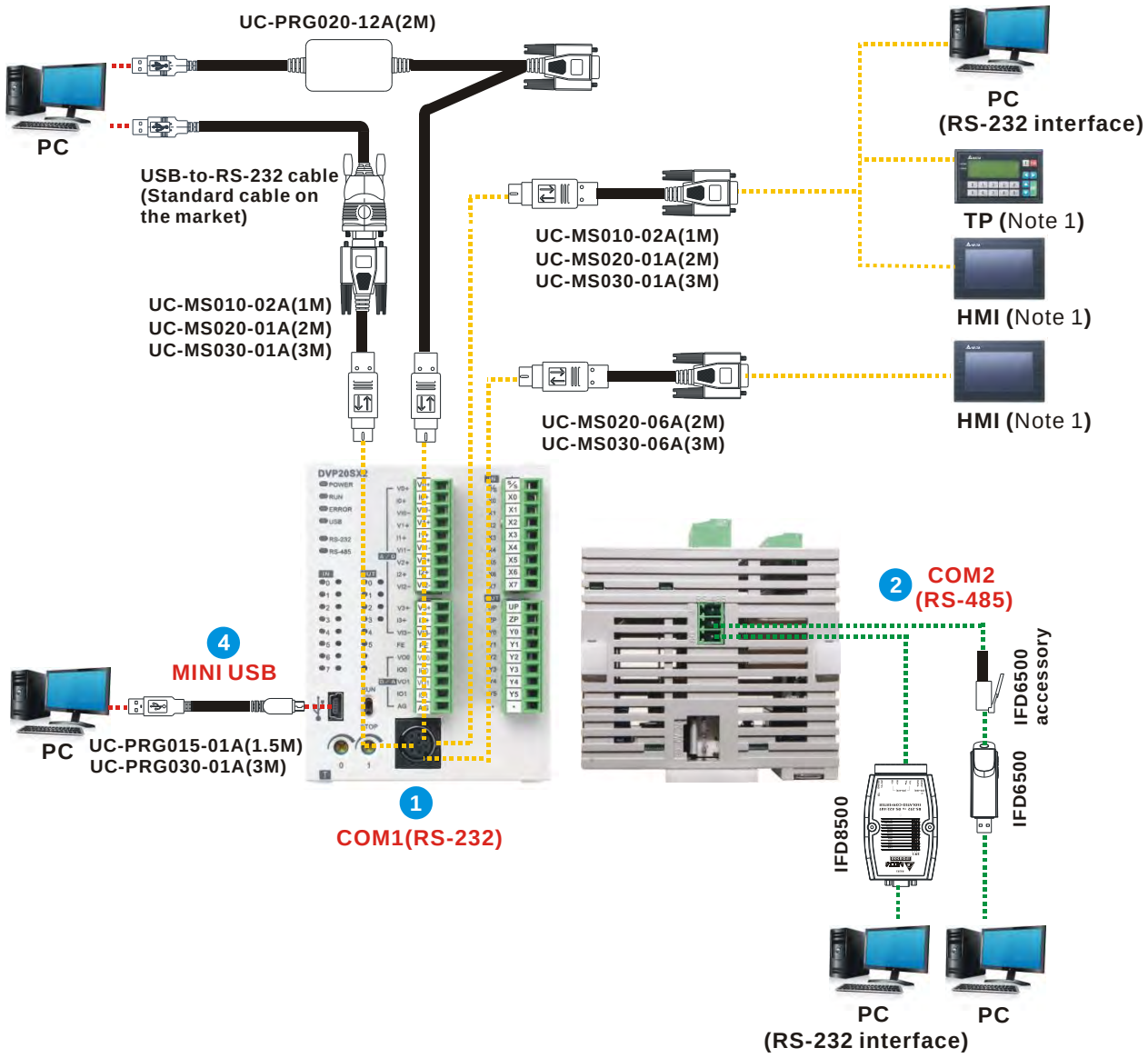

Note 1: Please refer to section 1.16, section 1.17, and section 1.18 for more information about TP/HMI models.

Note 2: Please refer to section 1.21 for more information about 1, 2, 3, etc.

1.6.2 DVP-SX2 Series PLCs and Communication Modules

Applicable model: DVP20SX211R, DVP20SX211T, DVP20SX211S

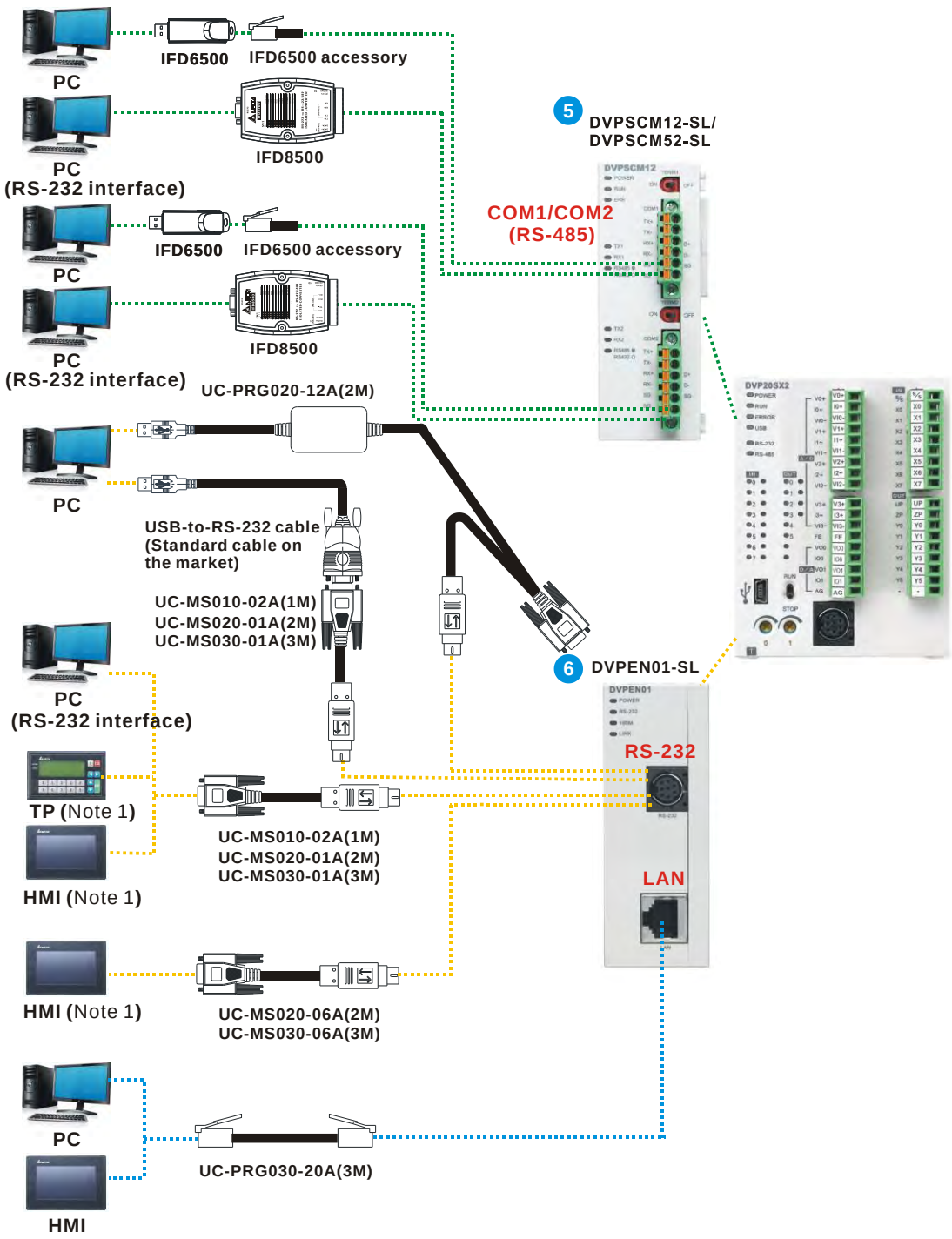

Note 1: Please refer to section 1.16, section 1.17, and section 1.18 for more information about TP/HMI models.

Note 2: Please refer to section 1.21 for more information about 1, 2, 3, etc.

1.7 DVP-SV2 Series

1.7.1 DVP-SV2 Series PLCs

Applicable model: DVP28SV11R2, DVP24SV11T2, DVP28SV11T2, DVP28SV11S2

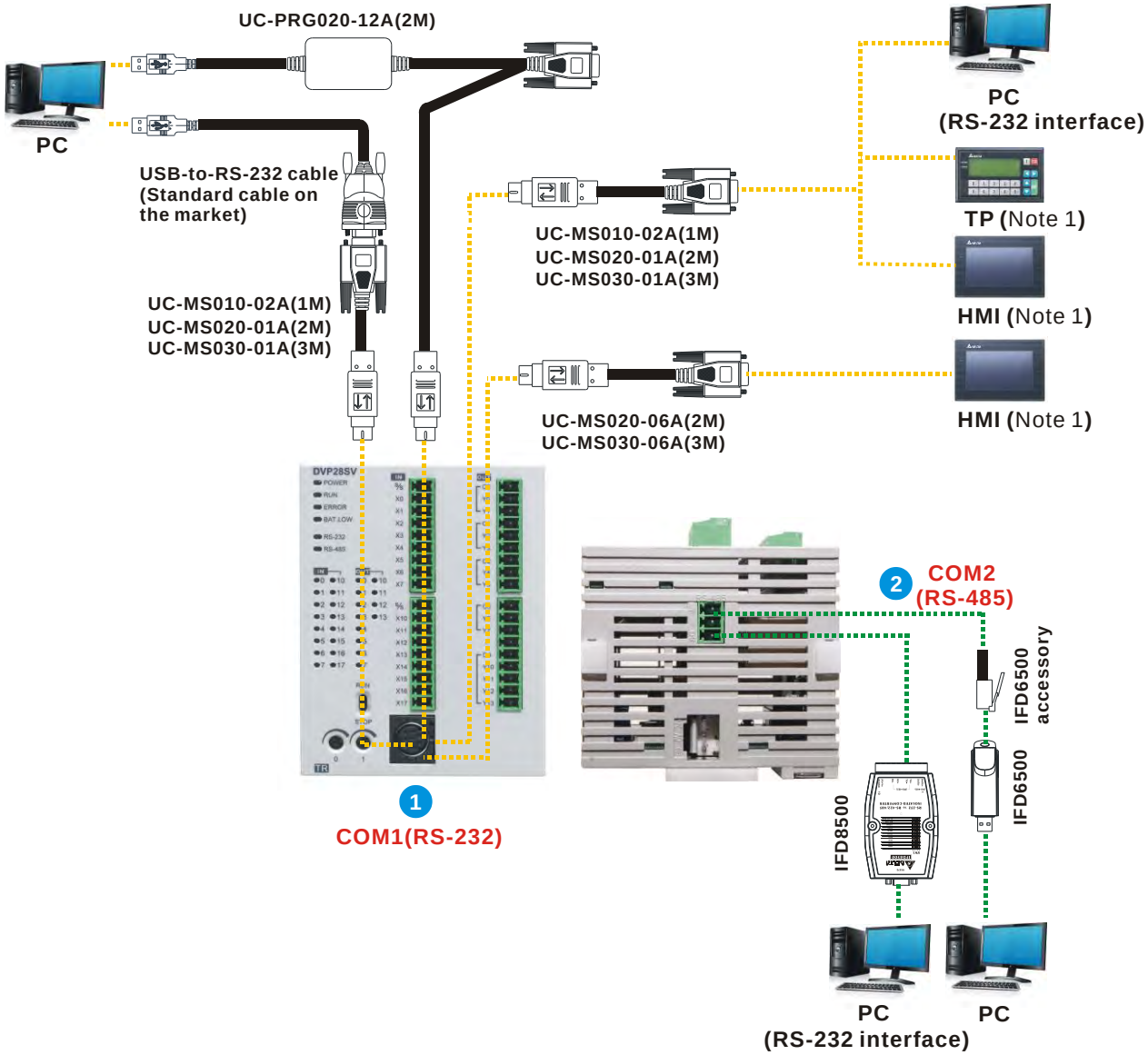

Note 1: Please refer to section 1.16, section 1.17, and section 1.18 for more information about TP/HMI models.

Note 2: Please refer to section 1.21 for more information about 1, 2, 3, etc.

1.7.2 DVP-SV2 Series PLCs and Communication Modules

Applicable model: DVP28SV11R2, DVP24SV11T2, DVP28SV11T2, DVP28SV11S2

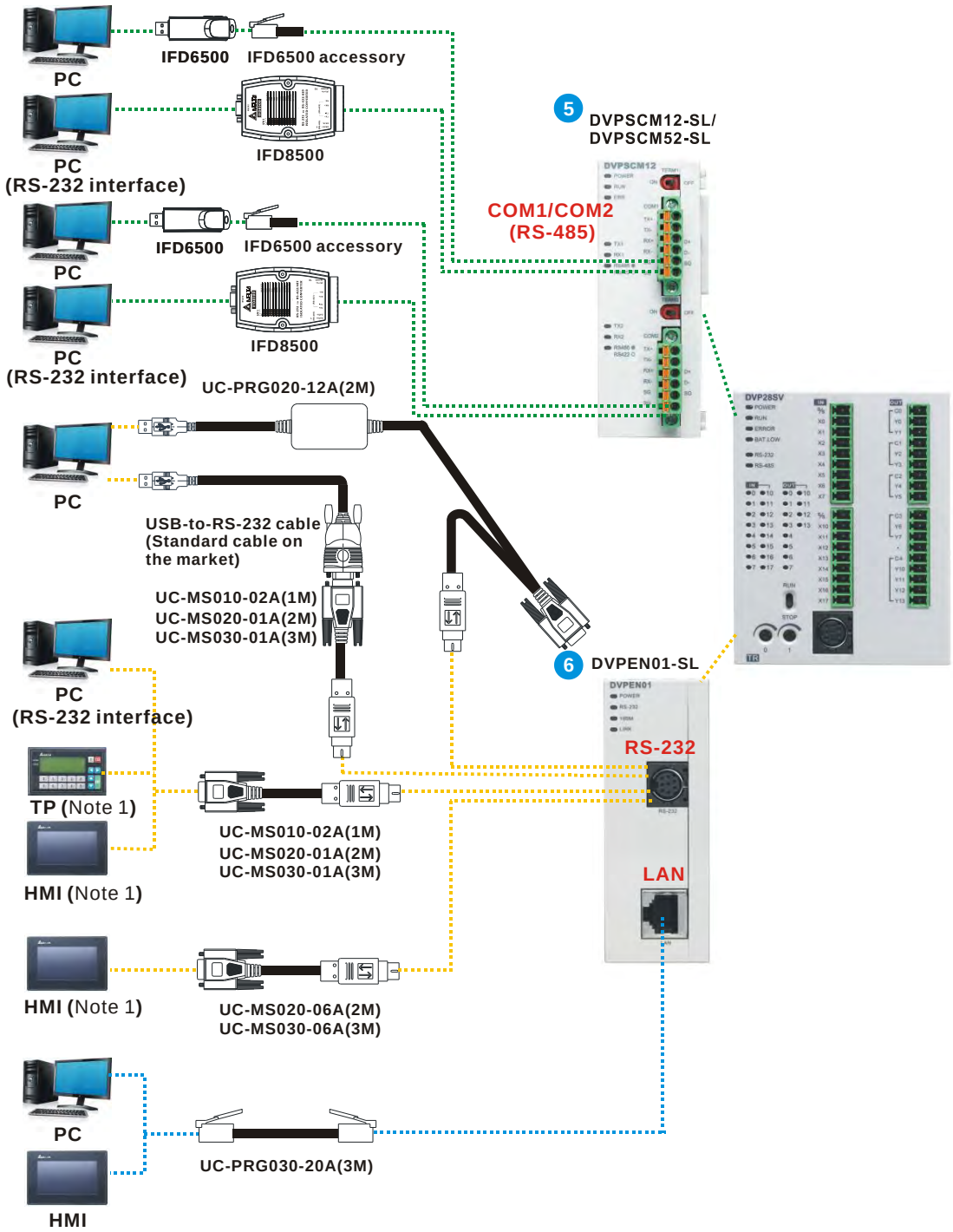

Note 1: Please refer to section 1.16, section 1.17, and section 1.18 for more information about TP/HMI models.

Note 2: Please refer to section 1.21 for more information about 1, 2, 3, etc.

1.8 DVP-SA2 Series

1.8.1 DVP-SA2 Series PLCs

Applicable model: DVP12SA211R, DVP12SA211T

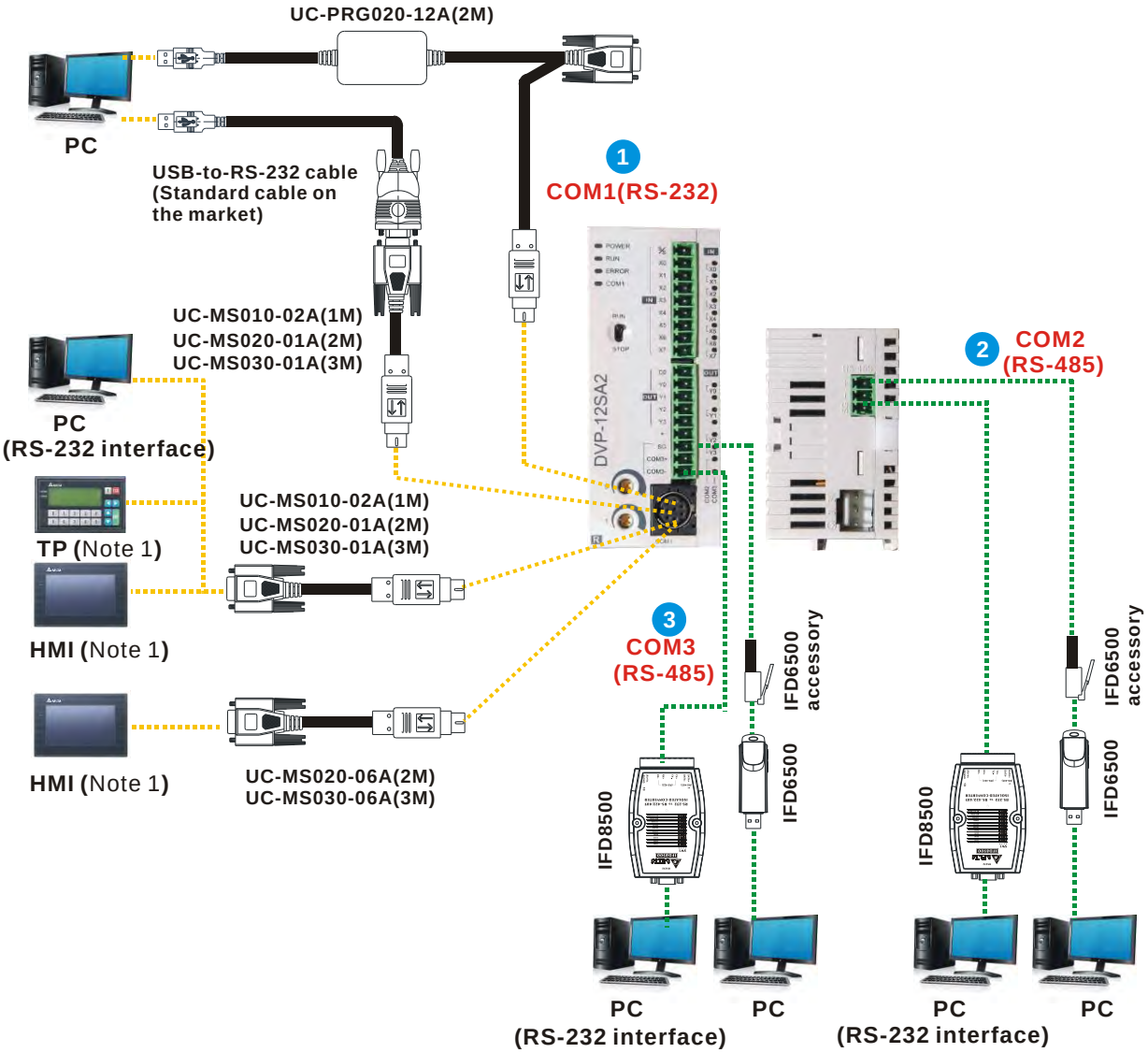

Note 1: Please refer to section 1.16, section 1.17, and section 1.18 for more information about TP/HMI models.

Note 2: Please refer to section 1.21 for more information about 1, 2, 3, etc.

1.8.2 DVP-SA2 Series PLCs and Communication Modules

Applicable model: DVP12SA211R, DVP12SA211T

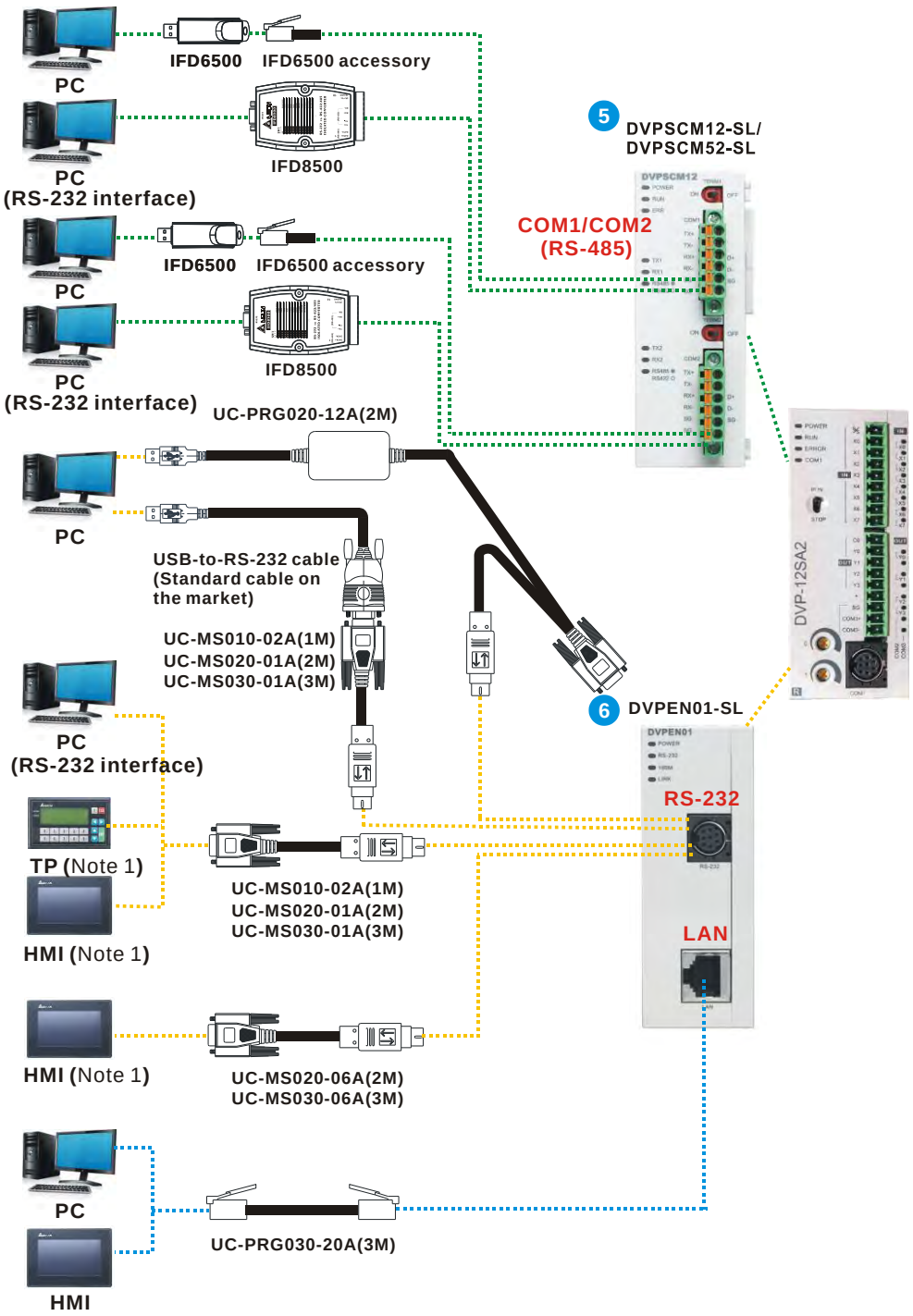

Note 1: Please refer to section 1.16, section 1.17, and section 1.18 for more information about TP/HMI models.

Note 2: Please refer to section 1.21 for more information about 1, 2, 3, etc.

1.9 DVP-SE Series

1.9.1 DVP-SE Series PLCs

Applicable model: DVP12SE11R, DVP12SE11T

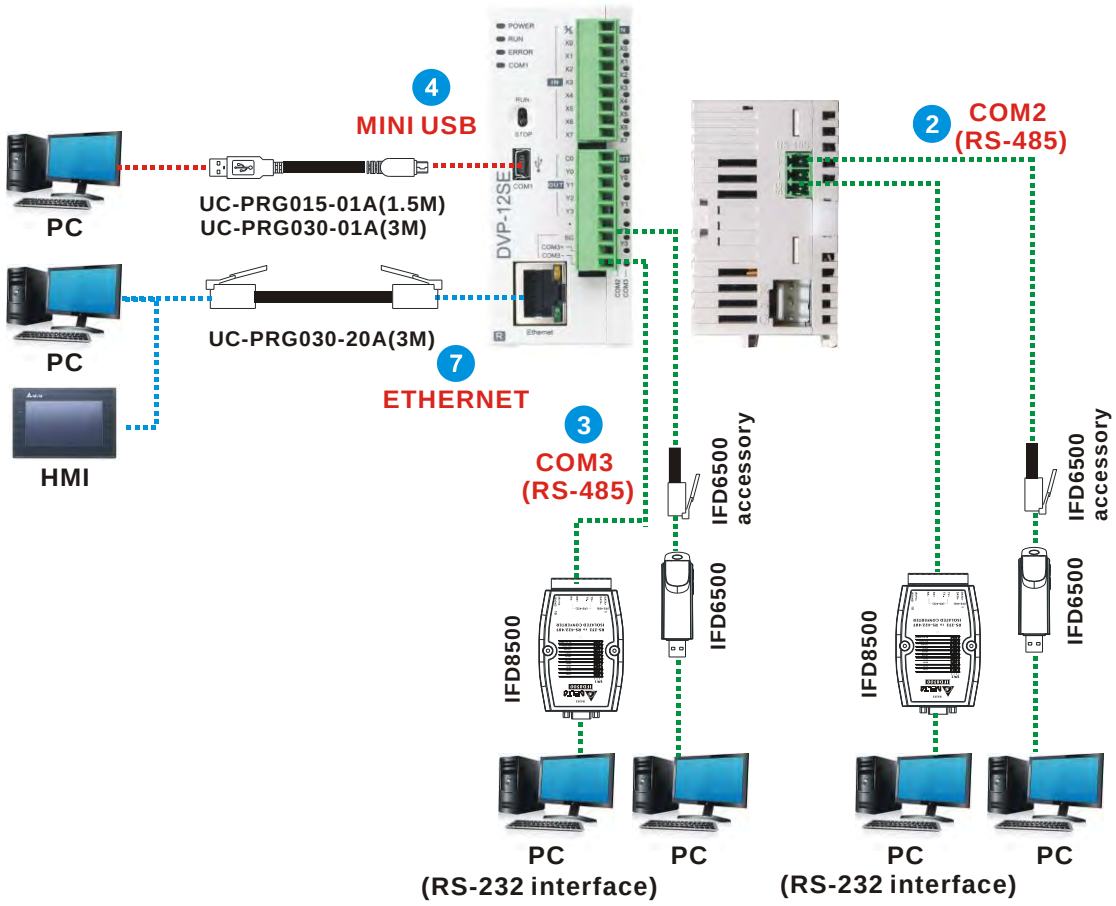

Note: Please refer to section 1.21 for more information about 1, 2, 3, etc.

1.9.2 DVP-SE Series PLCs and Communication Modules

Applicable model: DVP12SE11R, DVP12SE11T

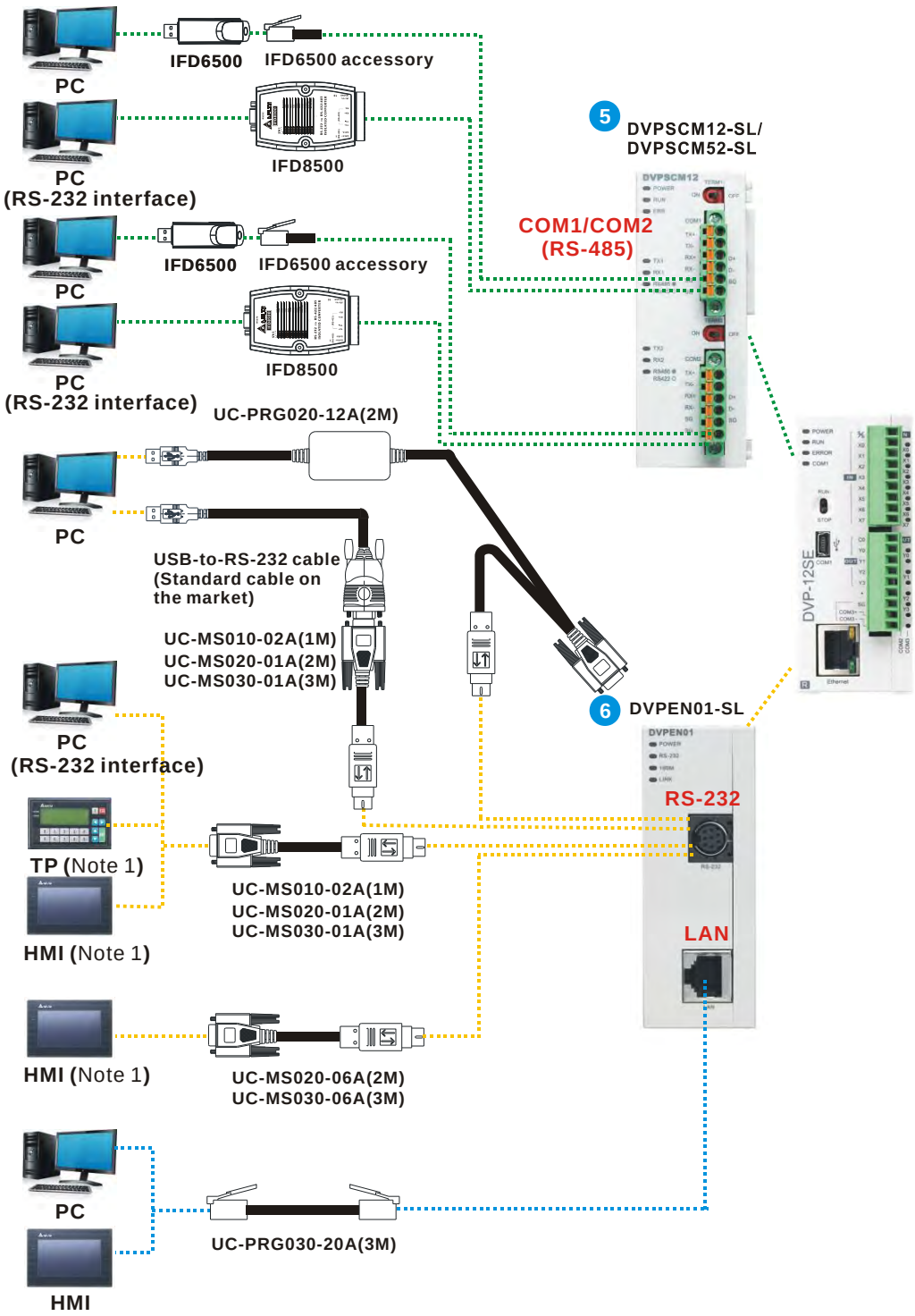

Note 1: Please refer to section 1.16, section 1.17, and section 1.18 for more information about TP/HMI models.

Note 2: Please refer to section 1.21 for more information about 1, 2, 3, etc.

1.10 DVP-EH3 Series

1.10.1 DVP-EH3 Series PLCs

Applicable model: DVP16EH00R3, DVP16EH00T3, DVP20EH00R3, DVP20EH00T3, DVP32EH00M3, DVP32EH00R3, DVP32EH00R3-L, DVP32EH00T3, DVP32EH00T3-L, DVP40EH00R3, DVP40EH00T3, DVP48EH00R3, DVP48EH00T3, DVP64EH00R3, DVP64EH00T3, DVP80EH00R3, DVP80EH00T3

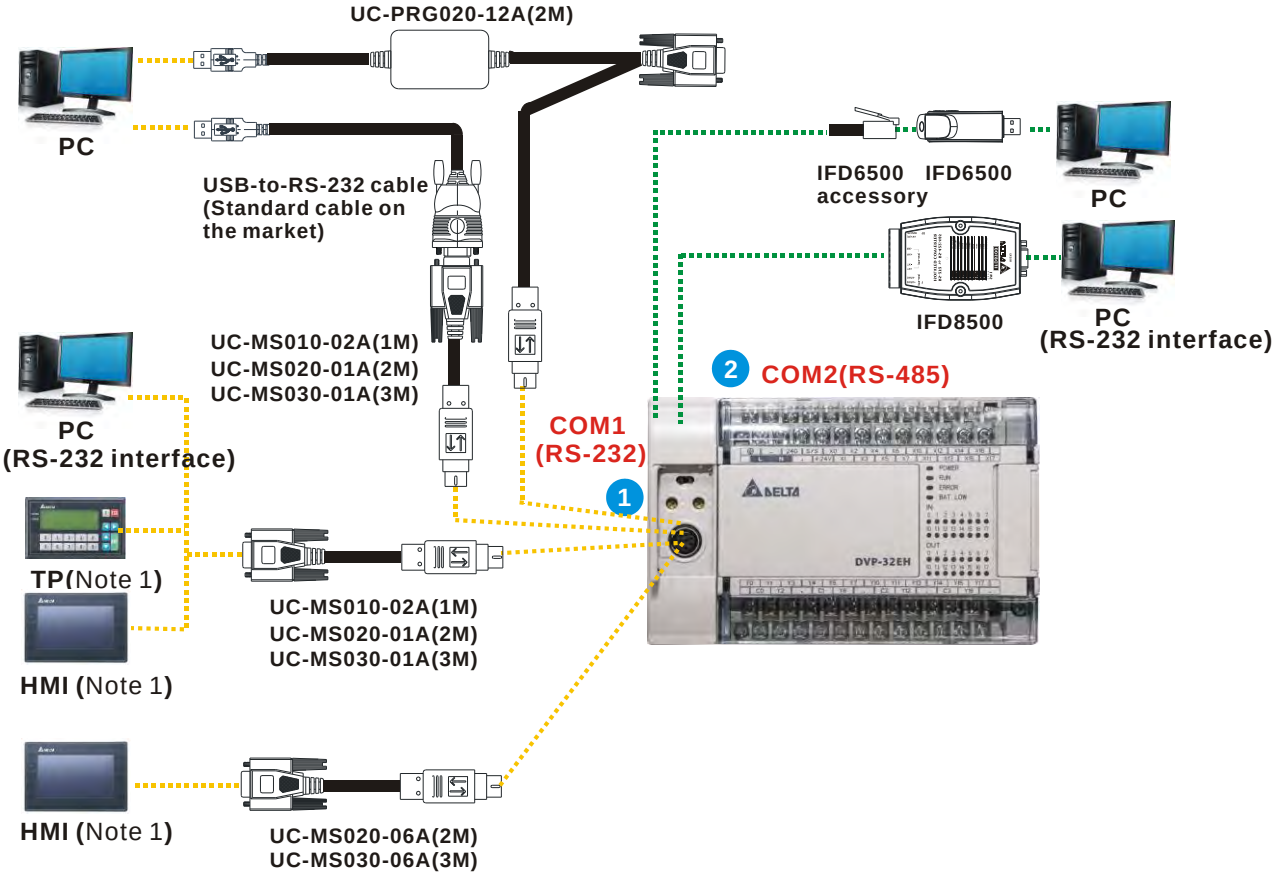

Note 1: Please refer to section 1.16, section 1.17, and section 1.18 for more information about TP/HMI models.

Note 2: Please refer to section 1.21 for more information about 1, 2, 3, etc.

1.10.2 DVP-EH3 Series PLCs and Function Cards

Applicable model: DVP16EH00R3, DVP16EH00T3, DVP20EH00R3, DVP20EH00T3, DVP32EH00M3, DVP32EH00R3, DVP32EH00R3-L, DVP32EH00T3, DVP32EH00T3-L, DVP40EH00R3, DVP40EH00T3, DVP48EH00R3, DVP48EH00T3, DVP64EH00R3, DVP64EH00T3, DVP80EH00R3, DVP80EH00T3

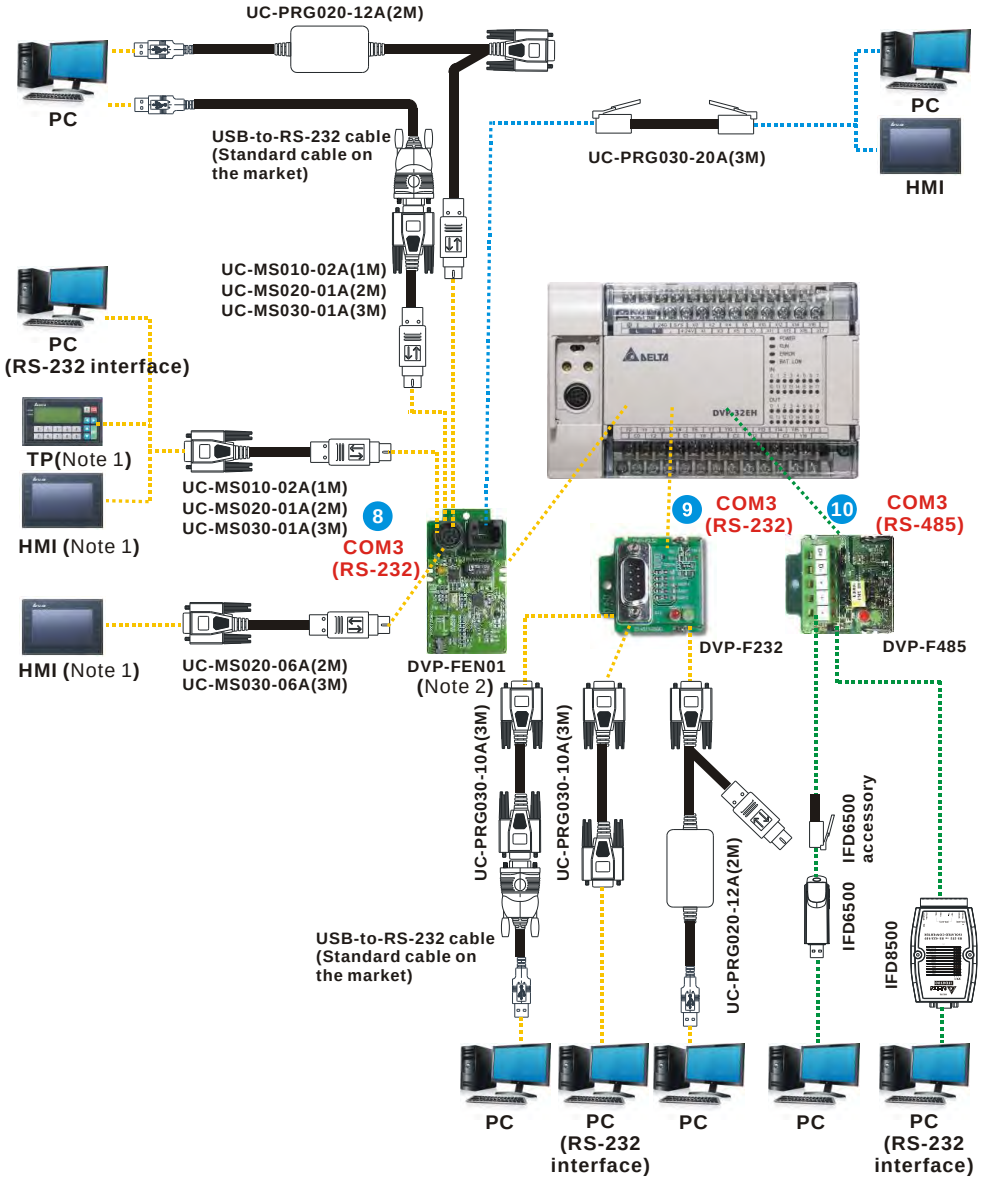

Note 1: Please refer to section 1.16, section 1.17, and section 1.18 for more information about TP/HMI models.

Note 2: DVP-FEN01 is applicable to DVP32EH00M3, DVP32EH00R3, DVP32EH00R3-L, DVP32EH00T3, DVP32EH00T3-L, DVP40EH00R3, DVP40EH00T3, DVP48EH00R3, DVP48EH00T3, DVP64EH00R3, DVP64EH00T3, DVP80EH00R3, and DVP80EH00T3.

Note 3: Please refer to section 1.21 for more information about 1, 2, 3, etc.

1.10.3 DVP-EH3 Series PLCs and Communication Modules

Applicable model: DVP32EH00R3-L, DVP32EH00T3-L

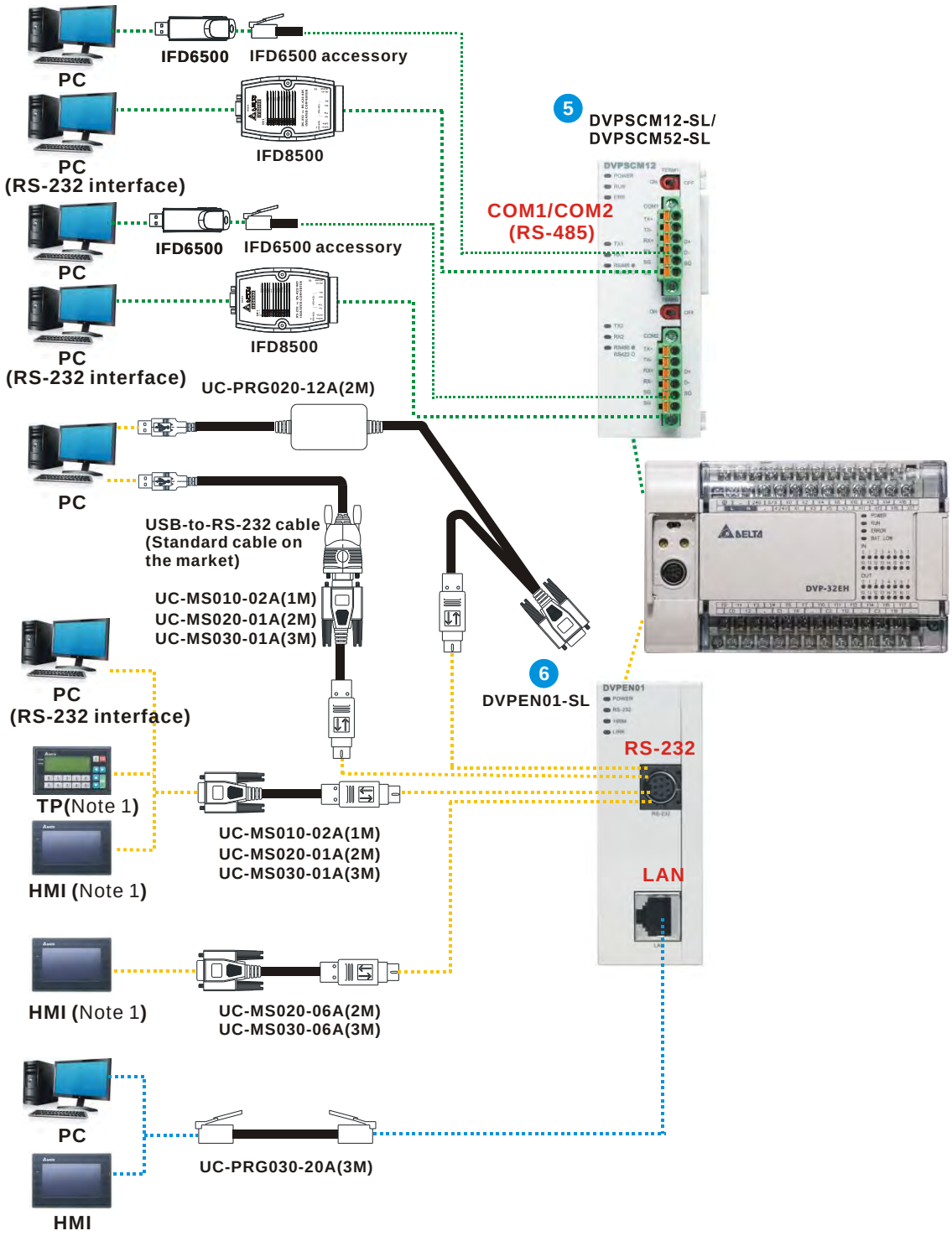

Note 1: Please refer to section 1.16, section 1.17, and section 1.18 for more information about TP/HMI models.

Note 2: Please refer to section 1.21 for more information about 1, 2, 3, etc.

1.11 DVP-PM Series

1.11.1 DVP-PM Series PLCs

Applicable model: DVP10PM00M, DVP20PM00D, DVP20PM00M

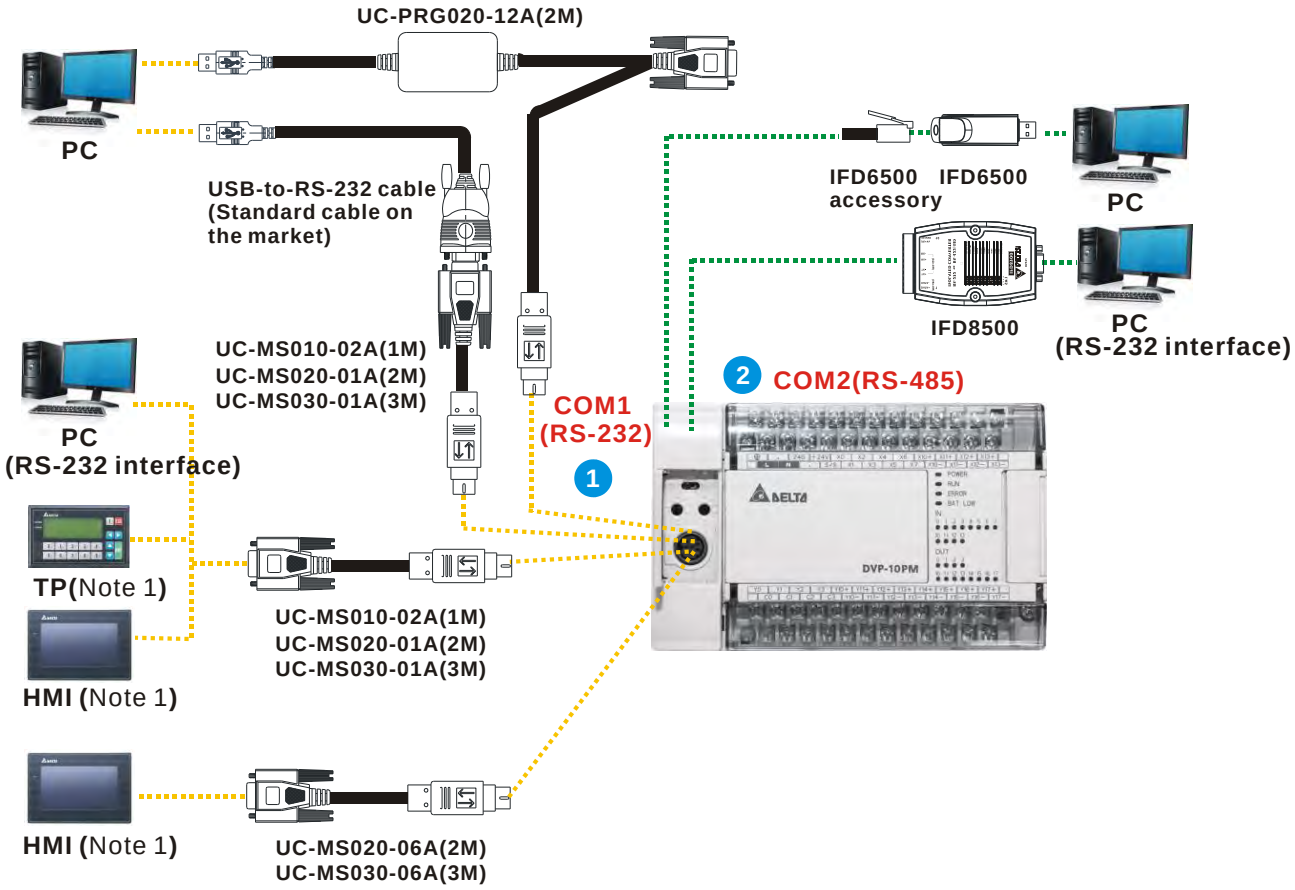

Note 1: Please refer to section 1.16, section 1.17, and section 1.18 for more information about TP/HMI models.

Note 2: Please refer to section 1.21 for more information about 1, 2, 3, etc.

1.11.2 DVP-PM Series PLCs and Function Cards

Applicable model: DVP10PM00M, DVP20PM00D, DVP20PM00M

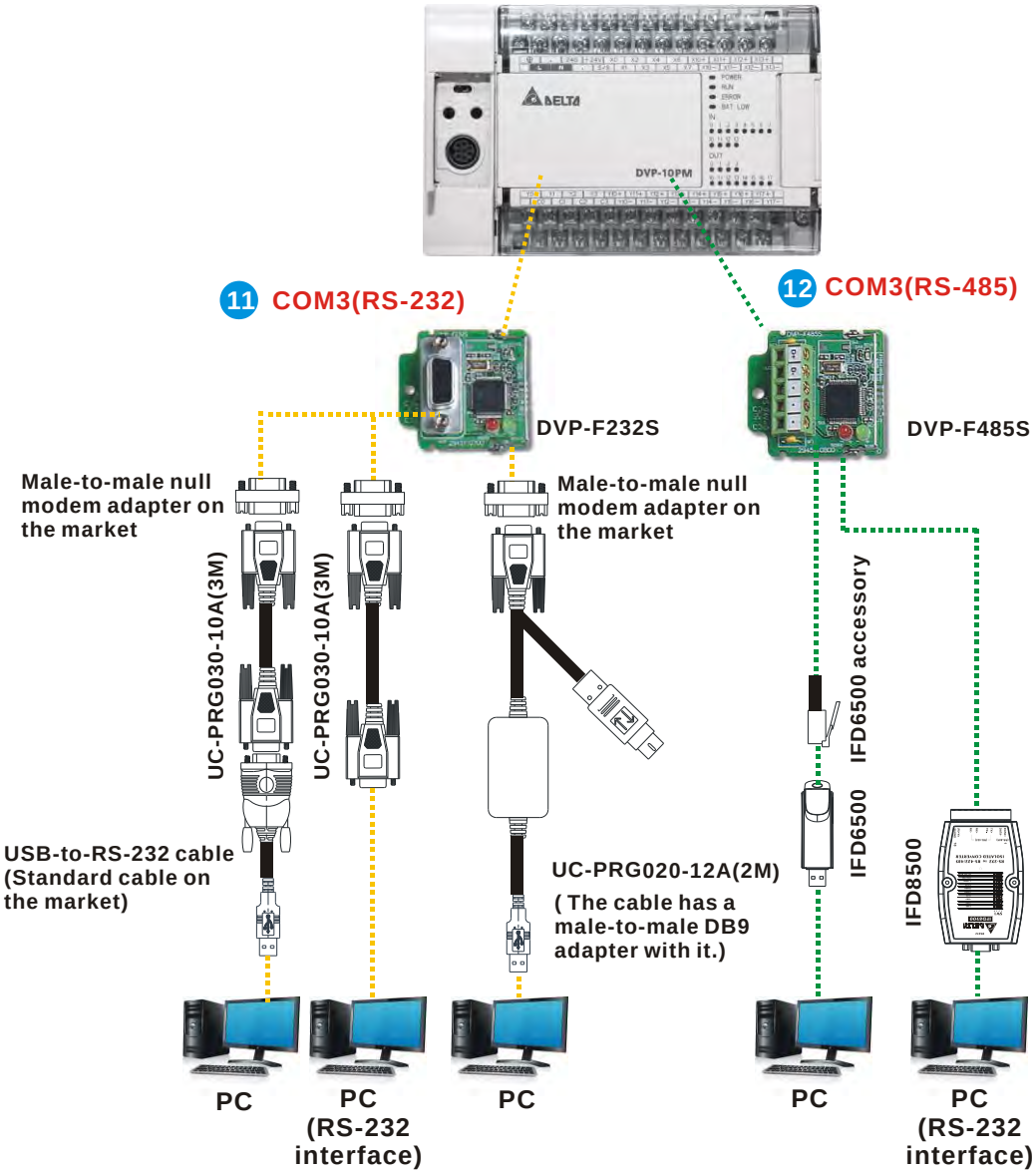

Note: Please refer to section 1.21 for more information about 1, 2, 3, etc.

1.12 DVP-MC Series

DVP-MC series (DVP10MC11T)

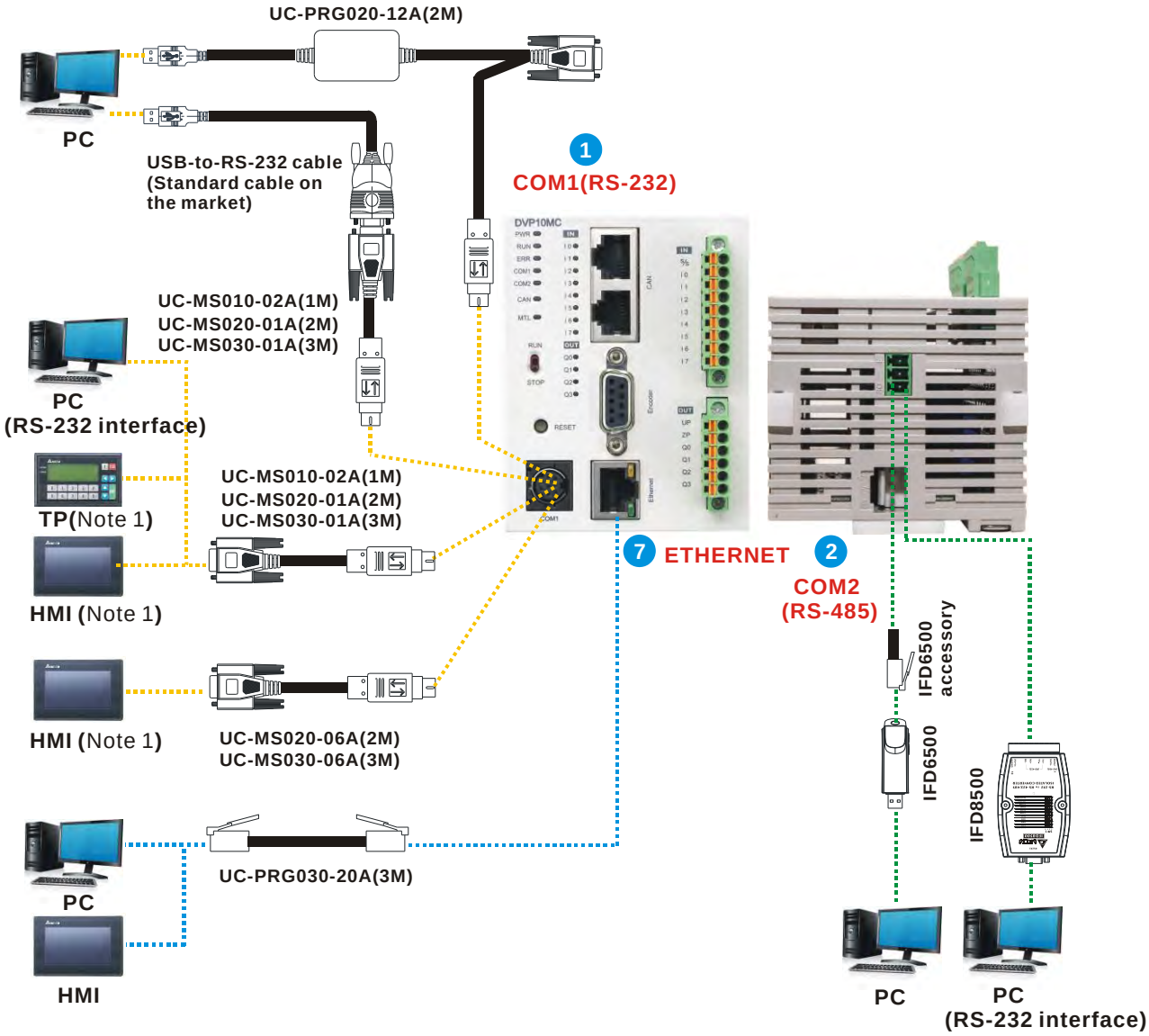

Note 1: Please refer to section 1.16, section 1.17, and section 1.18 for more information about TP/HMI models.

Note 2: Please refer to section 1.21 for more information about 1, 2, 3, etc.

1.13 DVP Series PLCs and the Delta Machine Vision System

Applicable DVP series:

- **DVP-ES2/EX2 series** (DVP16ES200R, DVP16ES200T, DVP20EX200R, DVP20EX200T, DVP24ES200R, DVP24ES200T, DVP30EX200R, DVP30EX200T, DVP32ES200R, DVP32ES200T, DVP32ES211T, DVP40ES200R, DVP40ES200RM, DVP40ES200T, DVP58ES200R, DVP58ES200T, DVP60ES200R, DVP60ES200T, DVP32ES200RC, DVP32ES200TC)
- **DVP-SS2 series** (DVP14SS211R, DVP14SS211T, DVP12SS211S)
- **DVP-SX2 series** (DVP20SX211R, DVP20SX211T, DVP20SX211S)
- **DVP-SV2 series** (DVP28SV11R2, DVP24SV11T2, DVP28SV11T2, DVP28SV11S2)
- **DVP-SA2 series** (DVP12SA211R, DVP12SA211T)
- **DVP-EH3 series** (DVP16EH00R3, DVP16EH00T3, DVP20EH00R3, DVP20EH00T3, DVP32EH00M3, DVP32EH00R3, DVP32EH00R3-L, DVP32EH00T3, DVP32EH00T3-L, DVP40EH00R3, DVP40EH00T3, DVP48EH00R3, DVP48EH00T3, DVP64EH00R3, DVP64EH00T3, DVP80EH00R3, DVP80EH00T3)

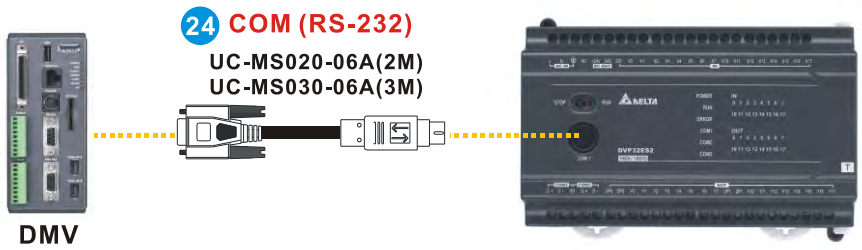

Note: Please refer to section 1.21 for more information about 1, 2, 3, etc.

1.14 AH500 Series

1.14.1 CPUs (AHCPU5XX-EN)

Applicable model: AHCPU500-EN, AHCPU510-EN, AHCPU511-EN, AHCPU520-EN, AHCPU521-EN, AHCPU530-EN, AHCPU531-EN

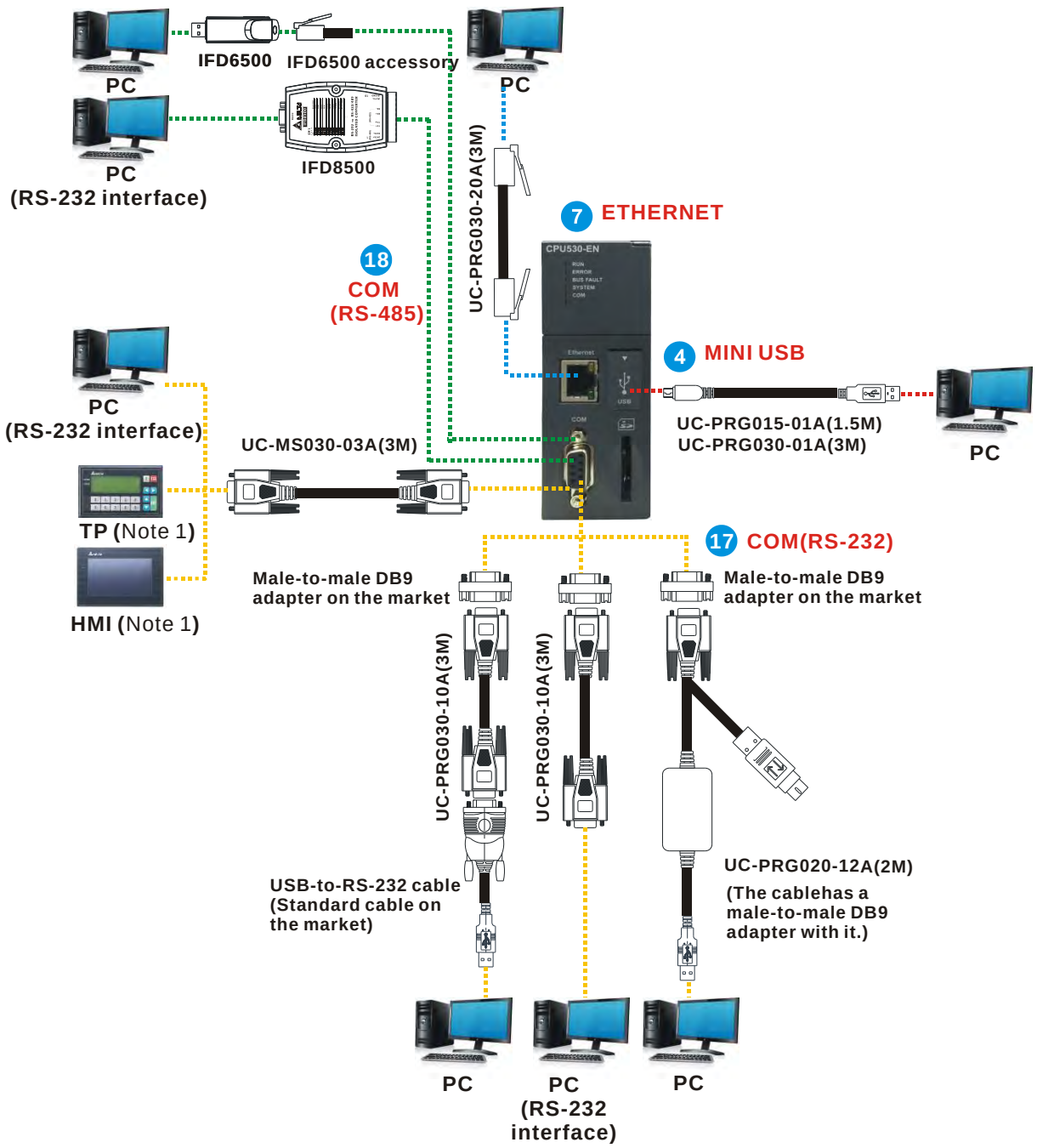

Note 1: Please refer to section 1.16, section 1.17, and section 1.18 for more information about TP/HMI models.

Note 2: Please refer to section 1.21 for more information about 1, 2, 3, etc.

1.14.2 AHCPU5XX-EN and Communication Modules

Applicable model: AHCPU500-EN, AHCPU510-EN, AHCPU511-EN, AHCPU520-EN, AHCPU521-EN, AHCPU530-EN, AHCPU531-EN

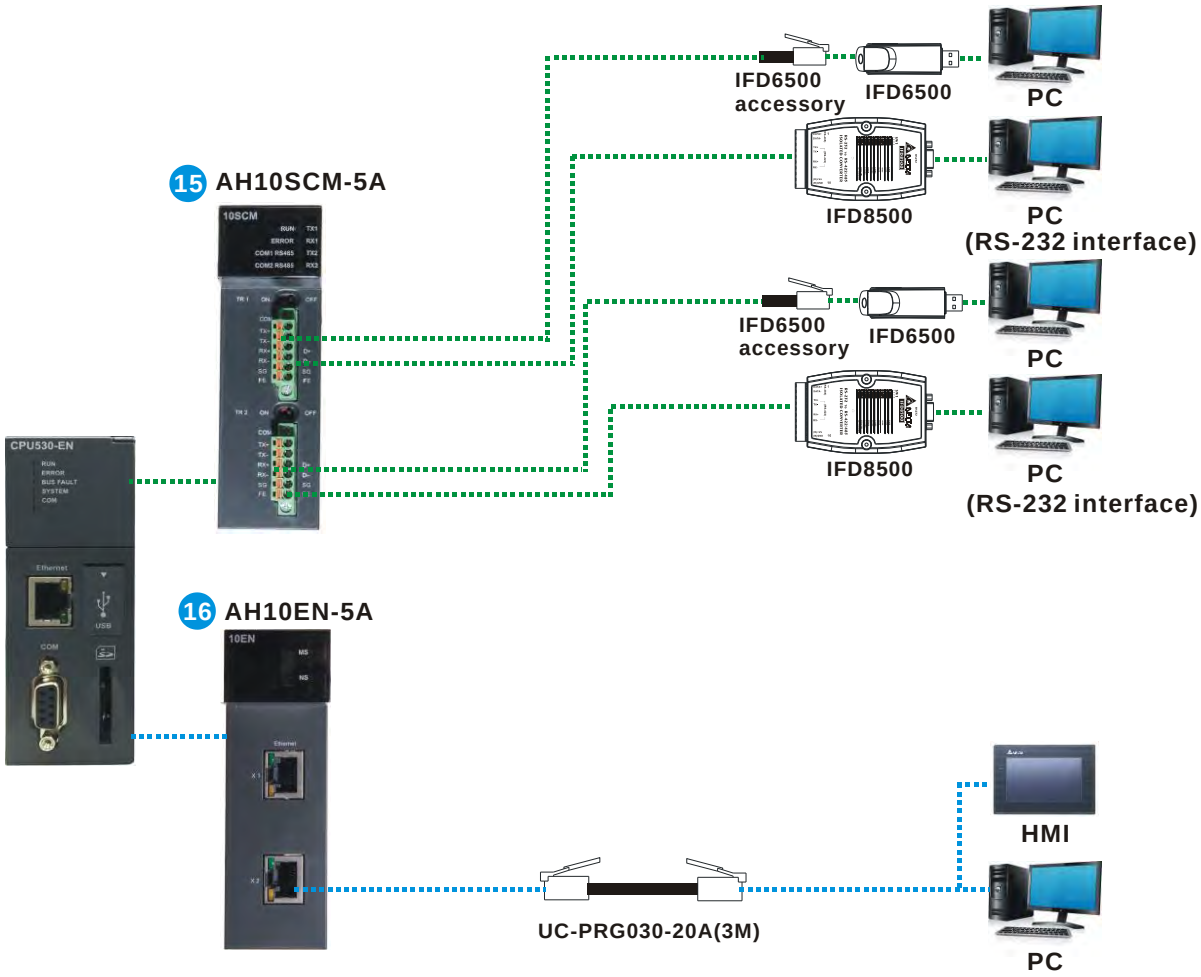

Note: Please refer to section 1.21 for more information about 1, 2, 3, etc.

1.14.3 AHCPU5XX-EN and the Delta Machine Vision System

Applicable model: AHCPU500-EN, AHCPU510-EN, AHCPU511-EN, AHCPU520-EN, AHCPU521-EN, AHCPU530-EN, AHCPU531-EN

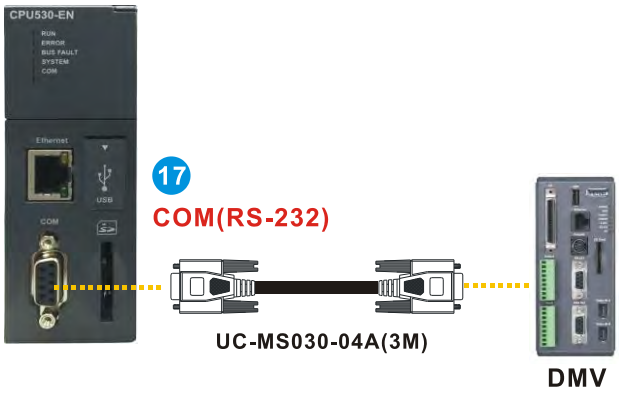

Note: Please refer to section 1.21 for more information about 1, 2, 3, etc.

1.14.4 CPUs (AHCPU5XX-RS2)

Applicable model: AHCPU500-RS2, AHCPU510-RS2, AHCPU511-RS2, AHCPU520-RS2, AHCPU530-RS2

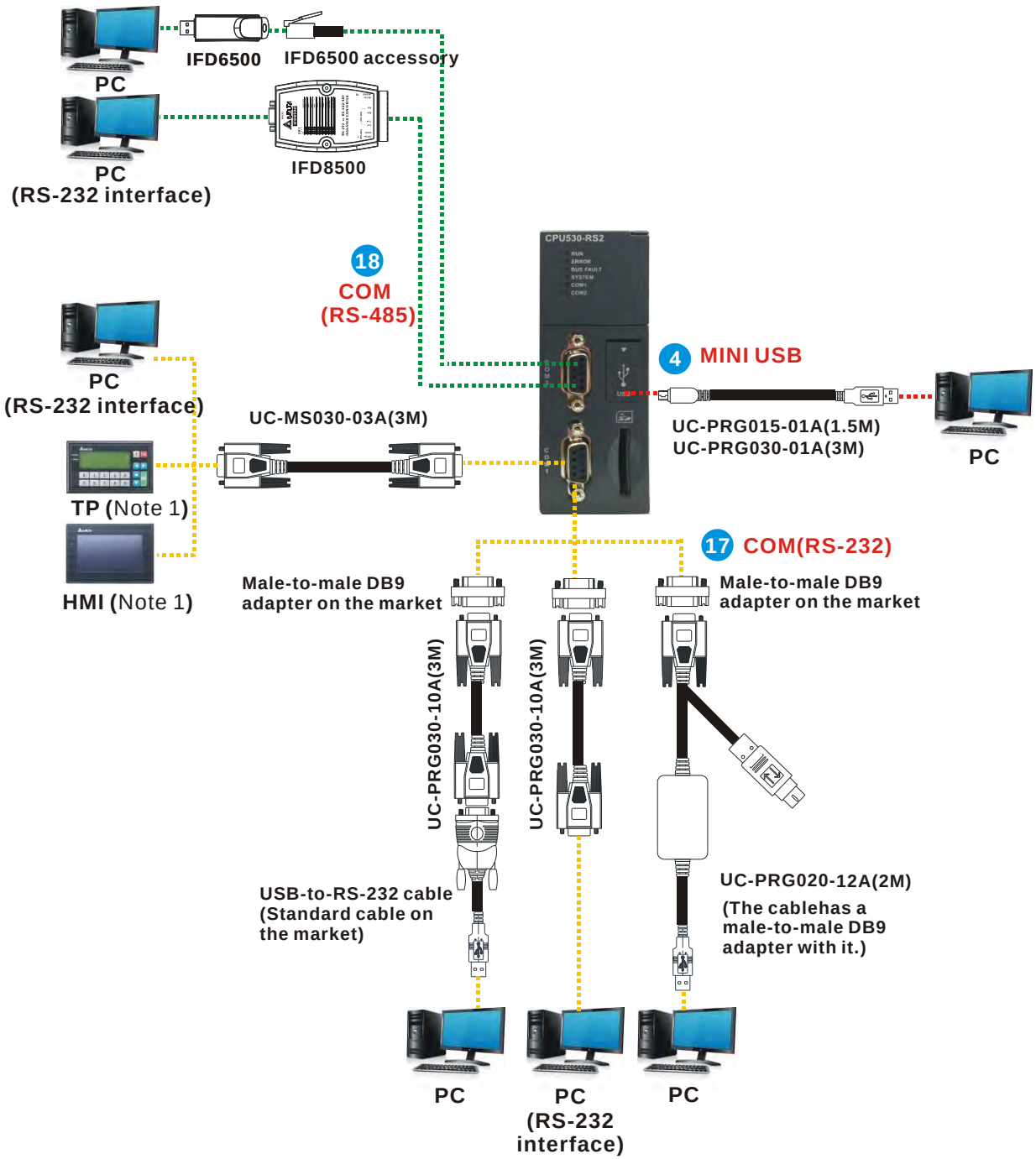

Note 1: Please refer to section 1.16, section 1.17, and section 1.18 for more information about TP/HMI models.

Note 2: Please refer to section 1.21 for more information about 1, 2, 3, etc.

1.14.5 AHCPU5XX-RS2 and Communication Modules

Applicable model: AHCPU500-RS2, AHCPU510-RS2, AHCPU511-RS2, AHCPU520-RS2, AHCPU530-RS2

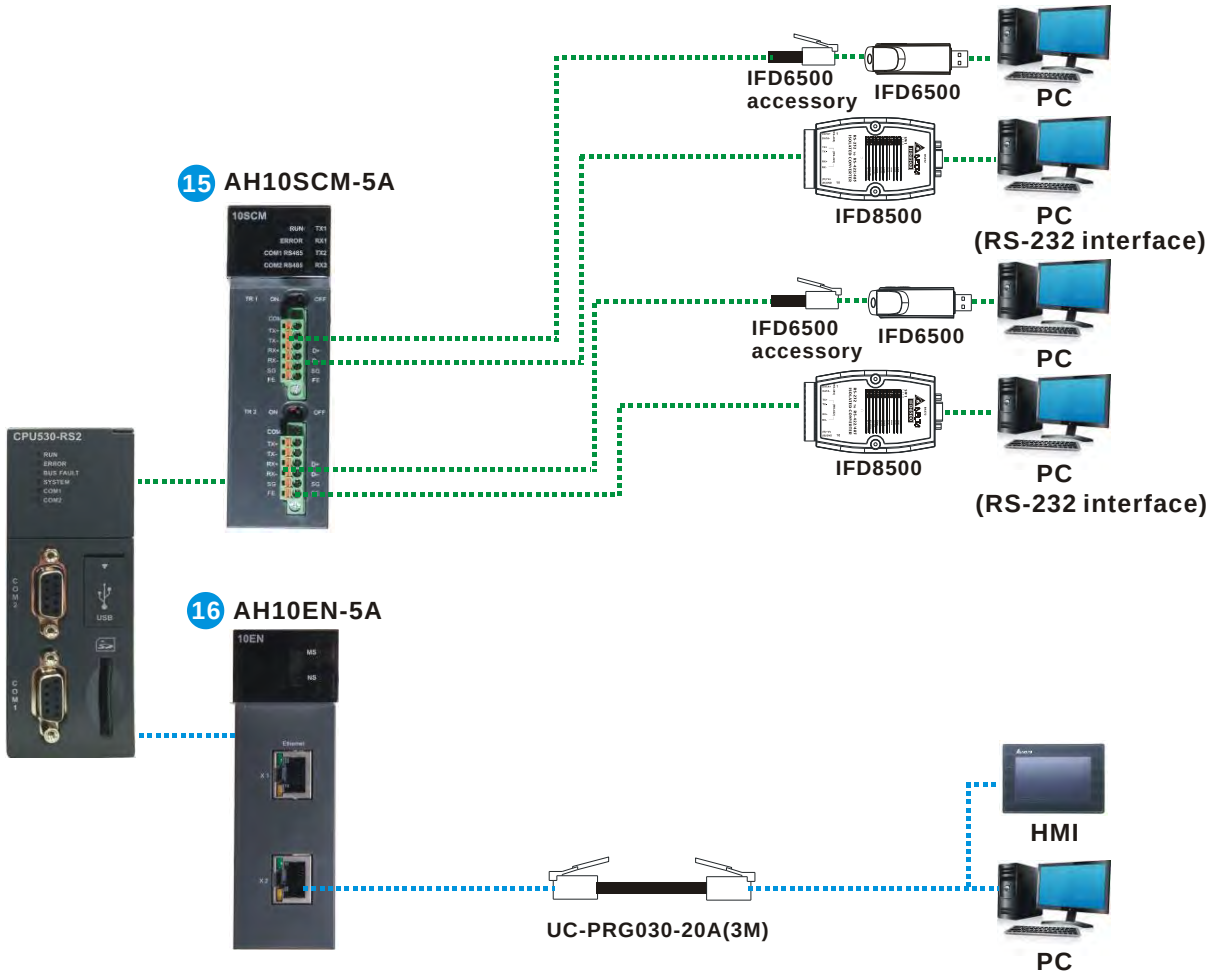

Note: Please refer to section 1.21 for more information about 1, 2, 3, etc.

1.14.6 AHCPU5XX-RS2 and the Delta Machine Vision System

Applicable model: AHCPU500-RS2, AHCPU510-RS2, AHCPU511-RS2, AHCPU520-RS2, AHCPU530-RS2

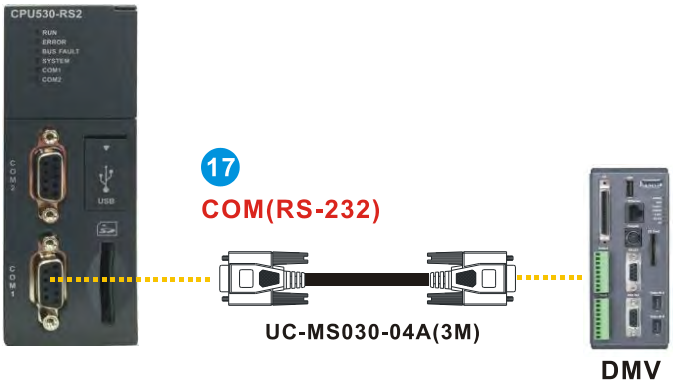

Note: Please refer to section 1.21 for more information about 1, 2, 3, etc.

1.14.7 Motion Control Modules

- Network type (AH20MC-5A/AH10EMC-5A)

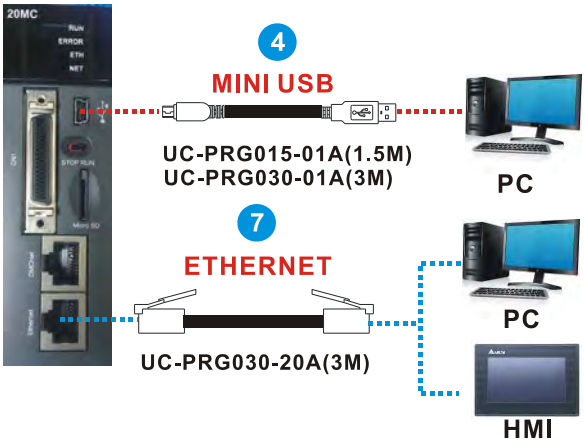

Note: Please refer to section 1.21 for more information about 1, 2, 3, etc.

- Pulse type (AH10PM-5A/AH15PM-5A)

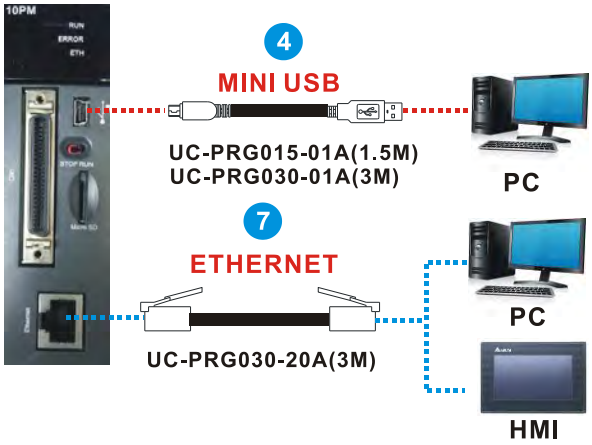

Note: Please refer to section 1.21 for more information about 1, 2, 3, etc.

1.15 AS300 Series

1.15.1 AS300 Series PLCs

Applicable model: AS332T-A、AS332P-A、AS324MT-A

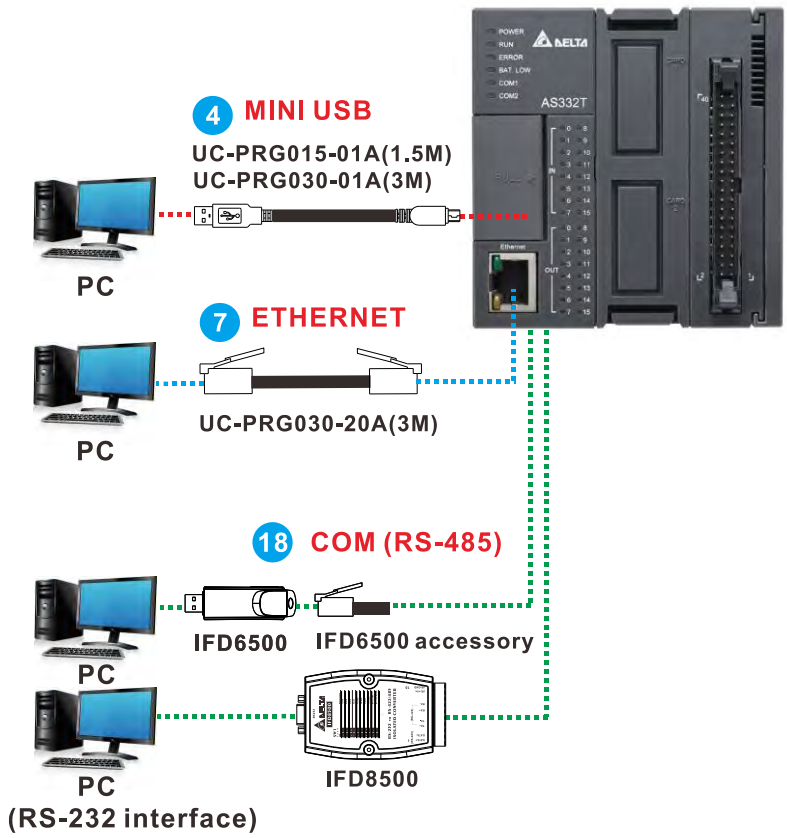

Note: Please refer to section 1.21 for more information about 1, 2, 3, etc.

1.15.2 AS300 Series PLCs and Function Cards

Applicable model: AS332T-A、AS332P-A、AS324MT-A

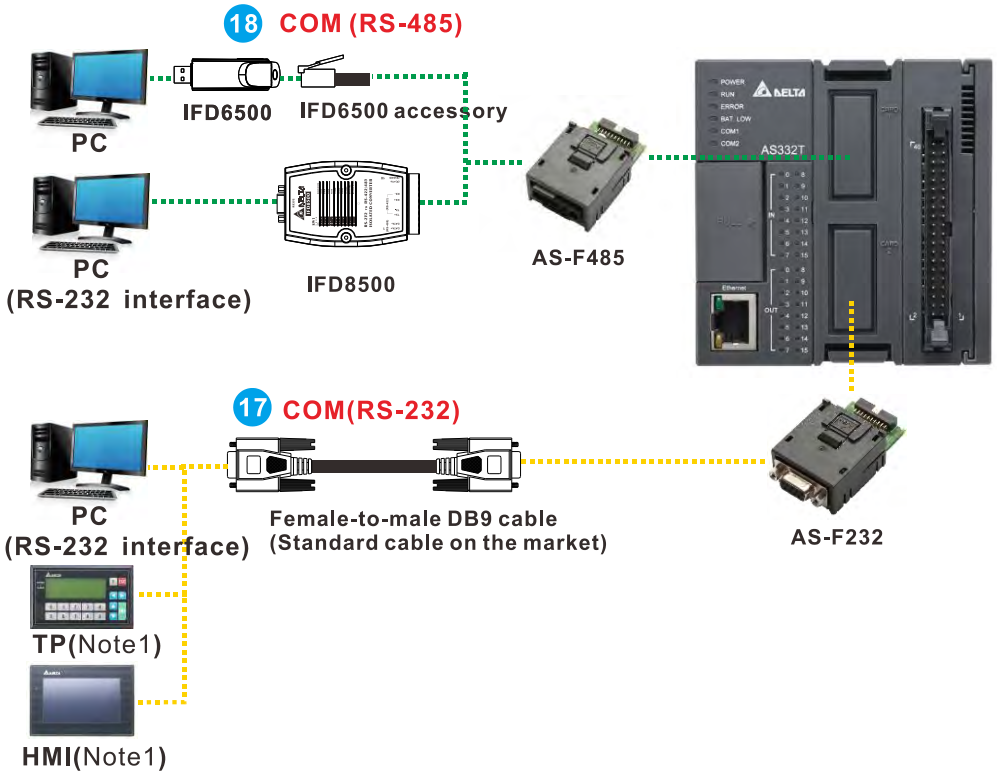

Note 1: Please refer to section 1.16, section 1.17, and section 1.18 for more information about TP/HMI models.

Note 2: Please refer to section 1.21 for more information about 1, 2, 3, etc.

1.15.3 AS300 Series PLCs and the Delta Machine Vision System

Applicable model: AS332T-A、AS332P-A、AS324MT-A

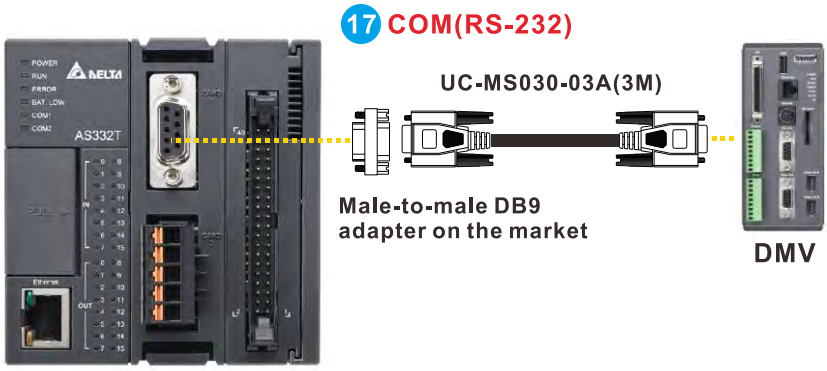

Note: Please refer to section 1.21 for more information about 1, 2, 3, etc.

1.16 TP Series

TP series (TP02G-AS1, TP04G-AS2)

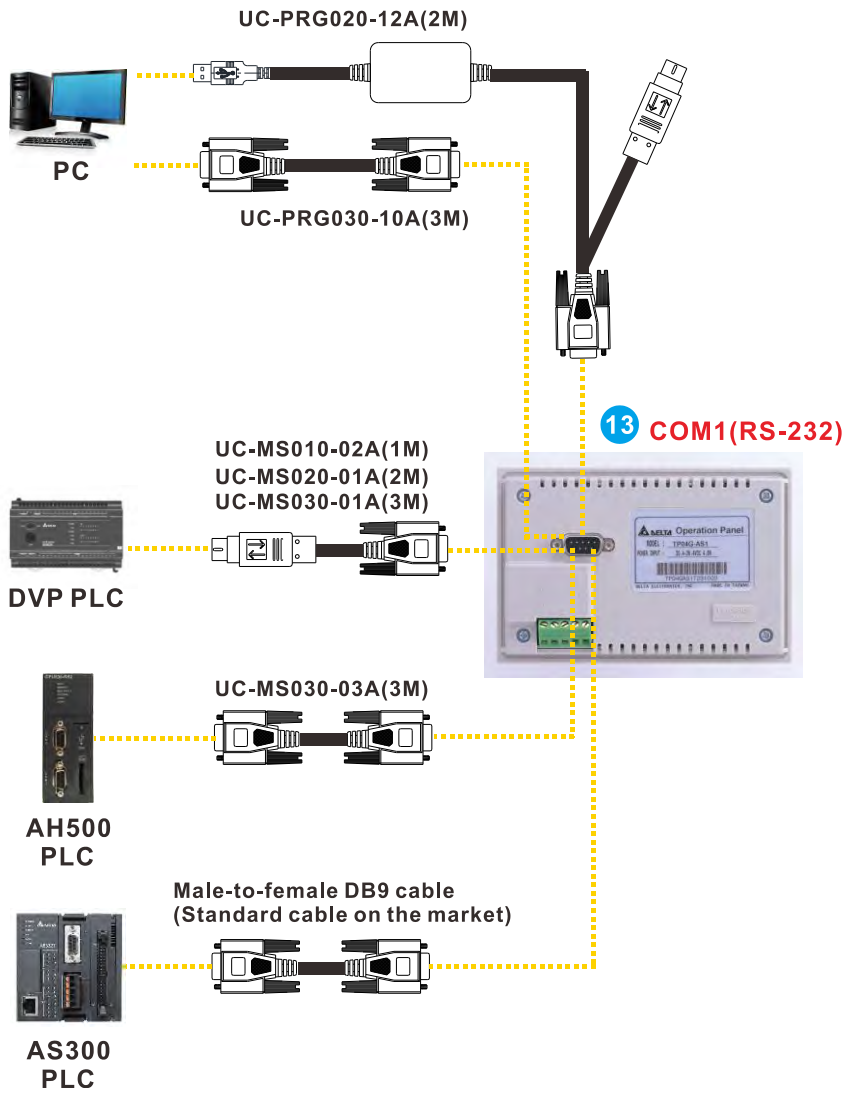

Note: Please refer to section 1.21 for more information about 1, 2, 3, etc.

TP series (TP08G-BT2)

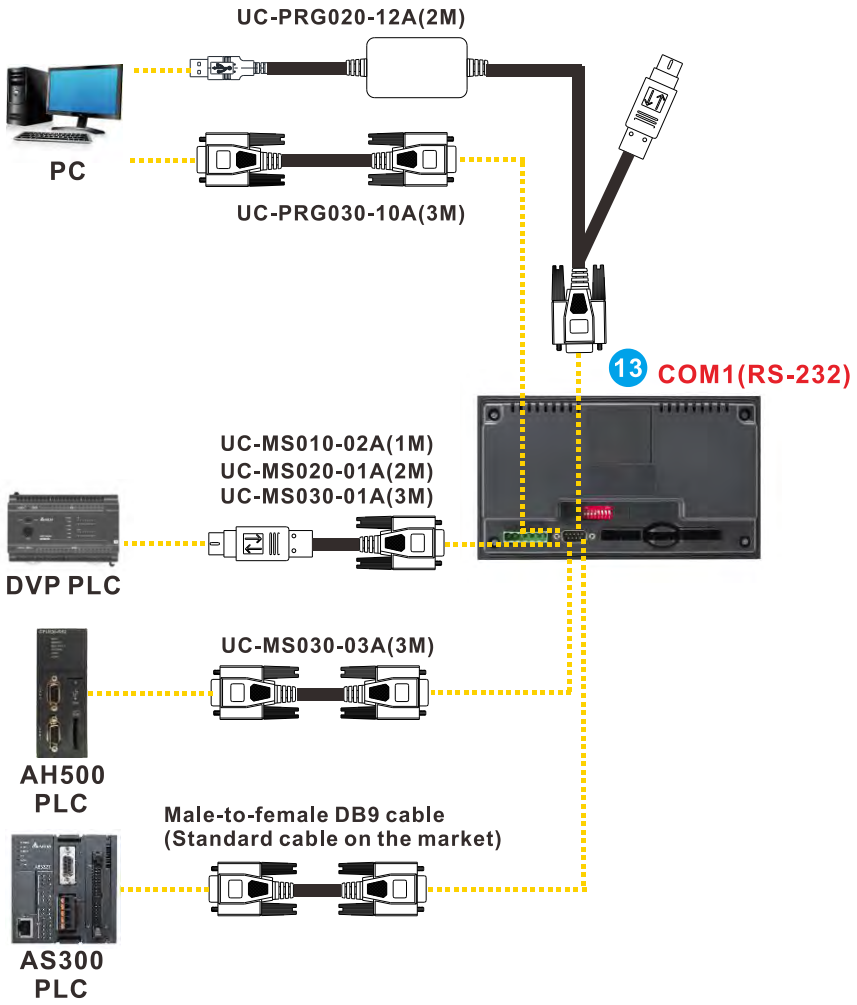

Note: Please refer to section 1.21 for more information about 1, 2, 3, etc.

TP series (TP04G-AL-C, TP04G-AL2)

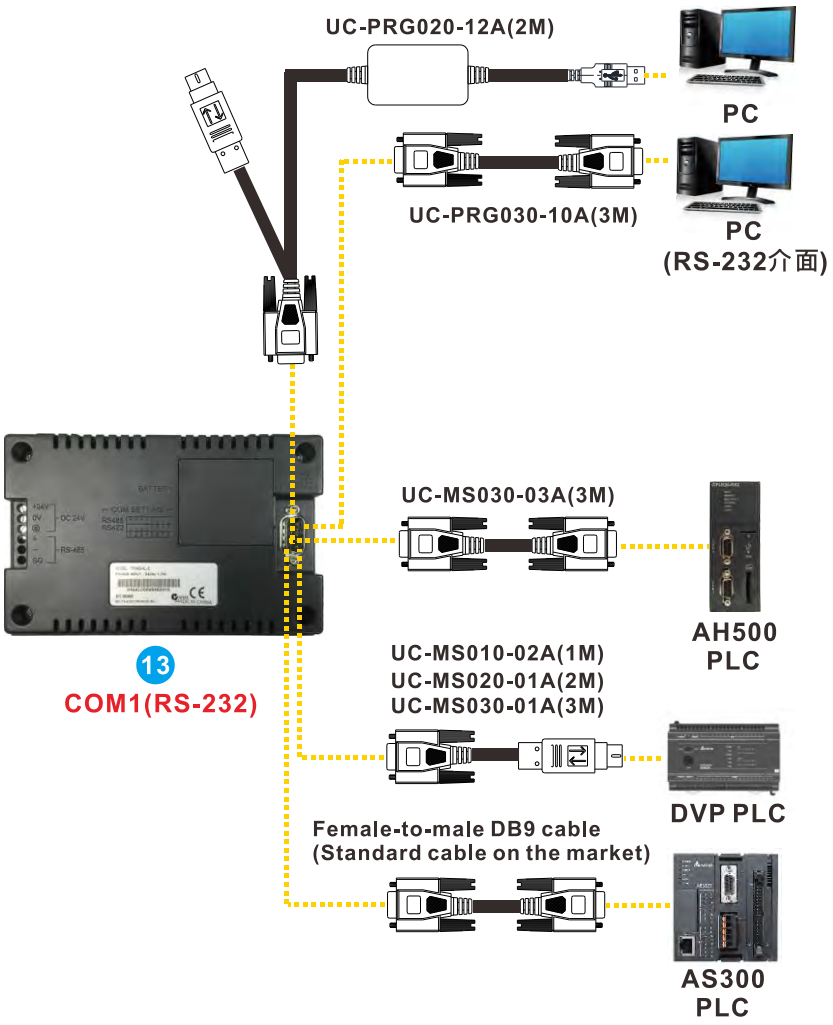

Note: Please refer to section 1.21 for more information about 1, 2, 3, etc.

TP series (TP04G-BL-C)

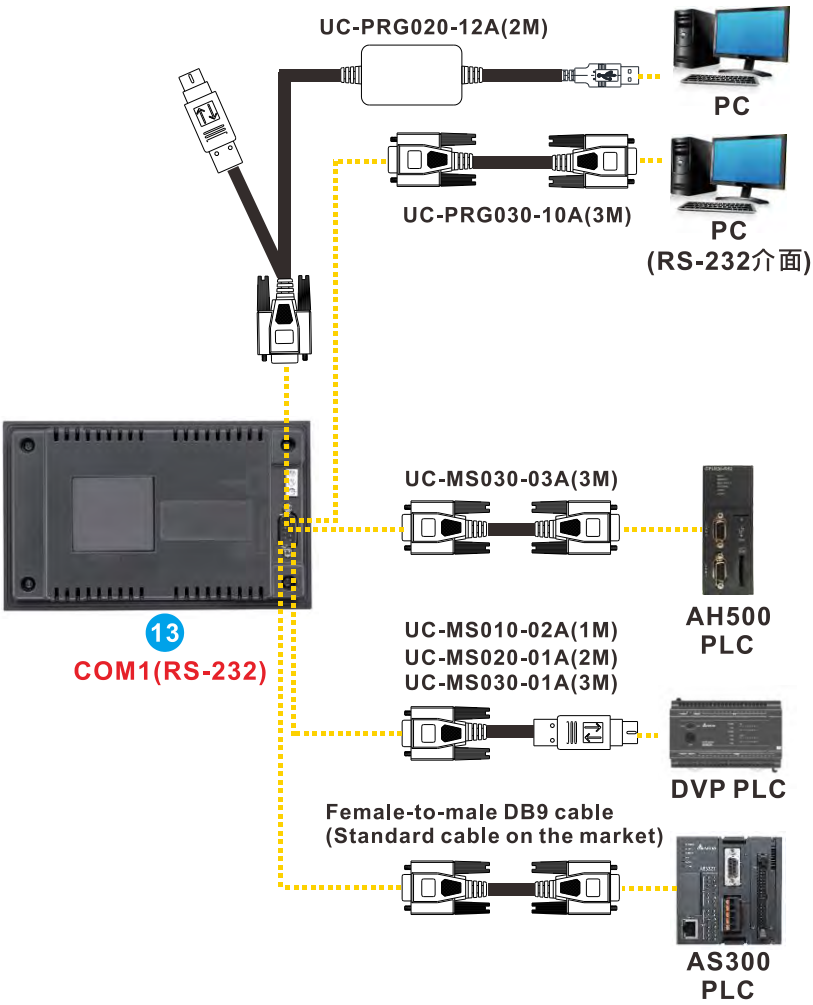

Note: Please refer to section 1.21 for more information about 1, 2, 3, etc.

TP04P series (TP04P-16TP1R, TP04P-21EX1R, TP04P-32TP1R, TP04P-22XA1R)

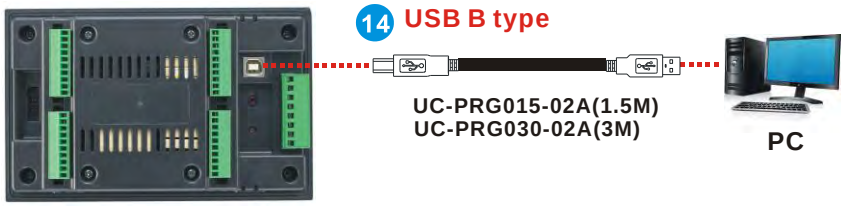

Note: Please refer to section 1.21 for more information about 1, 2, 3, etc.

TP70P series (TP70P-16TP1R, TP70P-21EX1R, TP70P-22XA1R, TP70P-32TP1R)

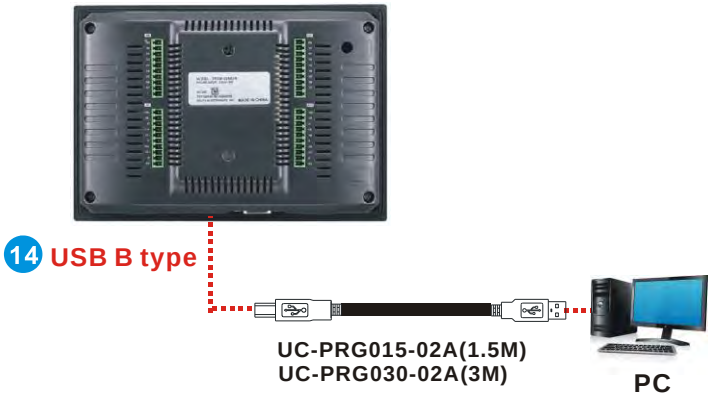

Note: Please refer to section 1.21 for more information about 1, 2, 3, etc.

TP70P series (TP70P-RM0, TP70P-RM1, TP70P-RM2)

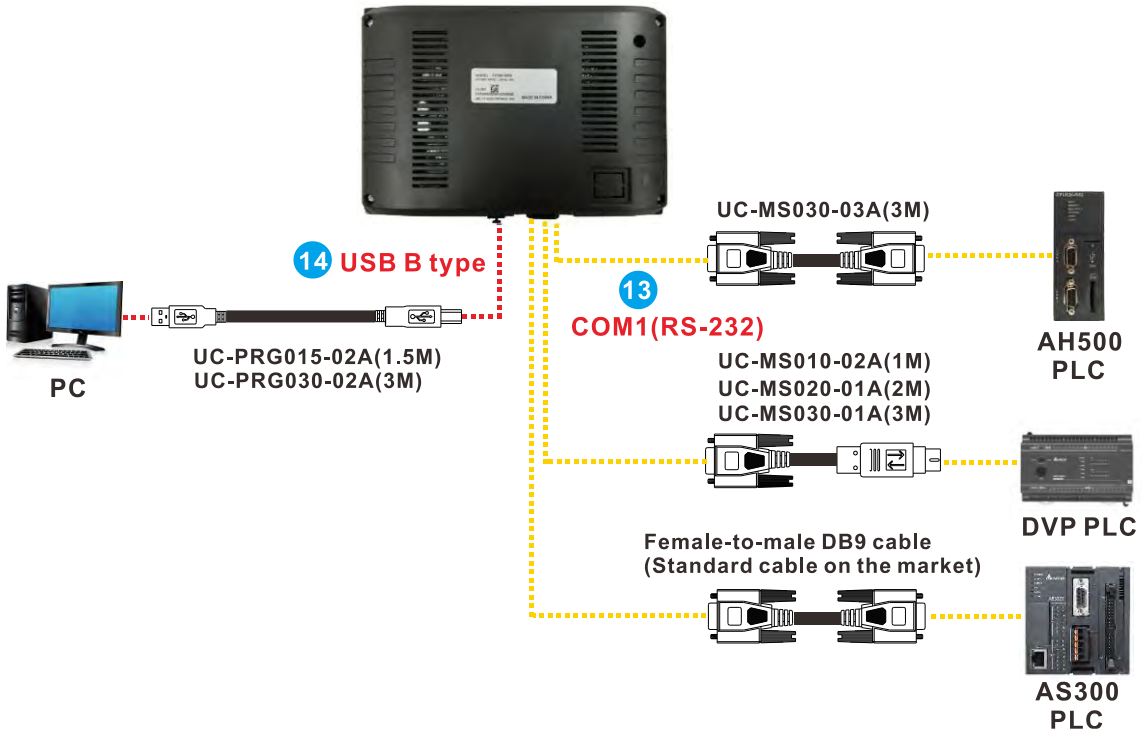

Note: Please refer to section 1.21 for more information about 1, 2, 3, etc.

1.17 DOP-B Series

DOP-B series (DOP-B03E211)

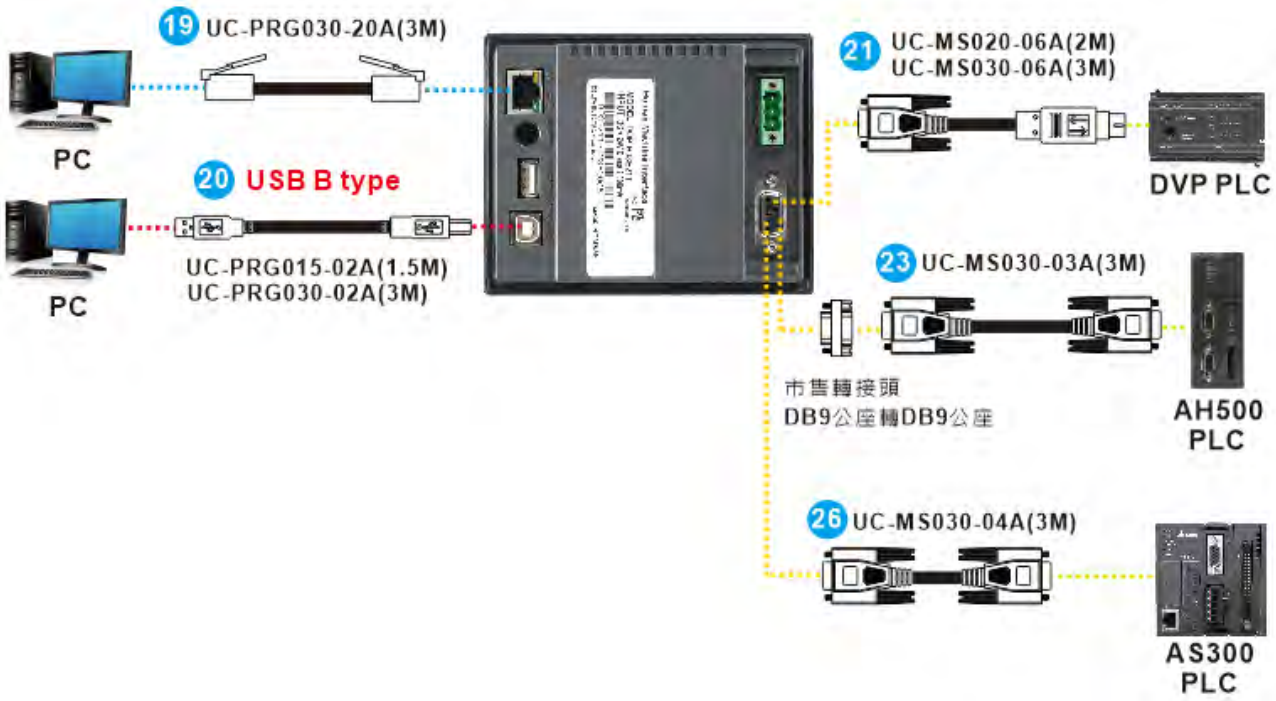

Note: Please refer to section 1.21 for more information about 1, 2, 3, etc.

DOP-B series (DOP-B03S210, DOP-B03S211)

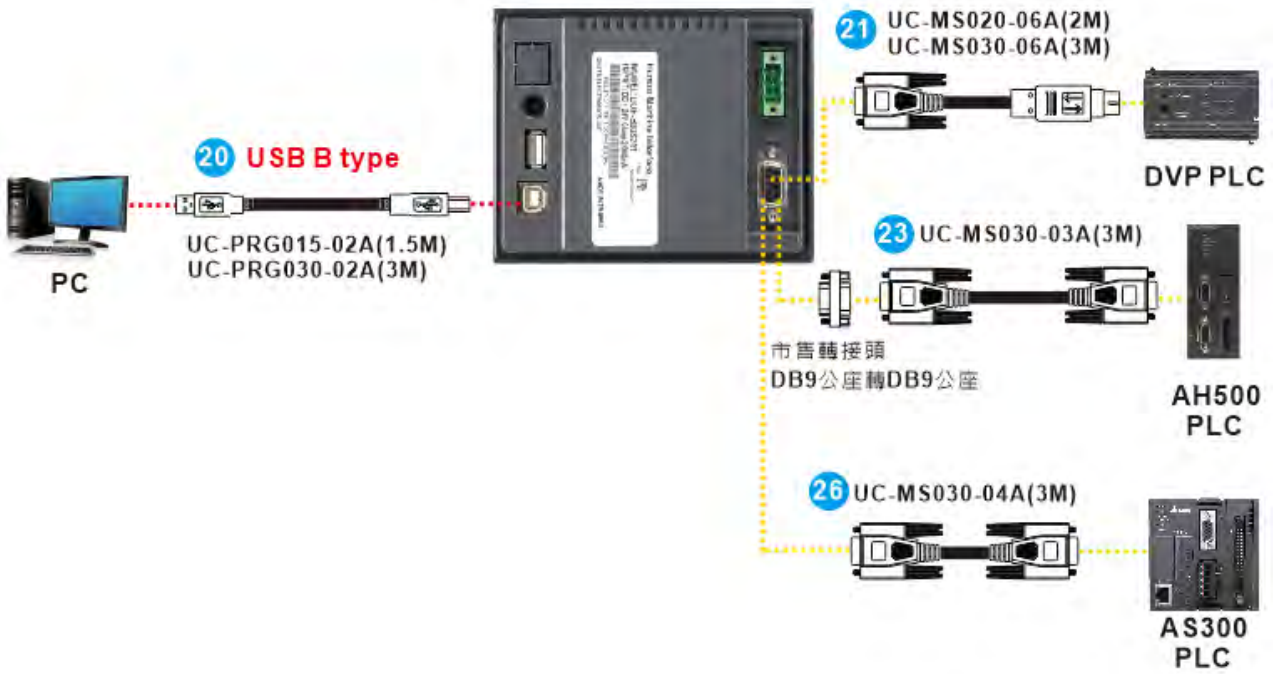

Note: Please refer to section 1.21 for more information about 1, 2, 3, etc.

DOP-B series (DOP-B05S111)

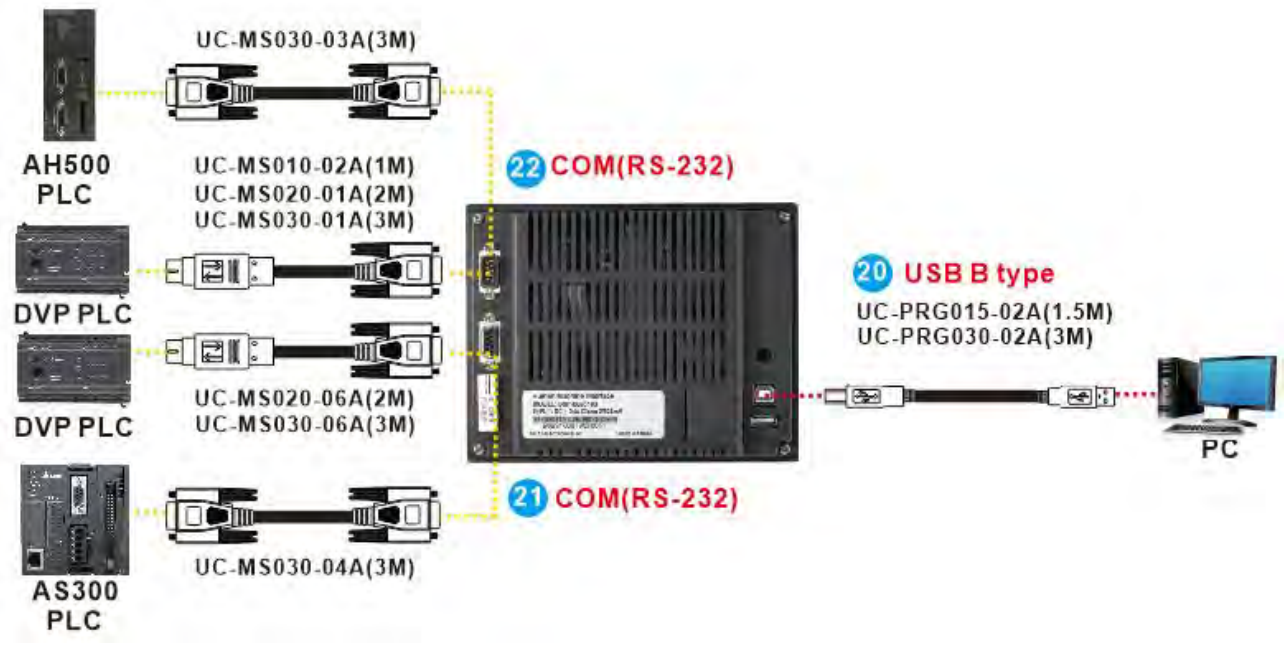

Note: Please refer to section 1.21 for more information about 1, 2, 3, etc.

DOP-B series (DOP-B07S410)

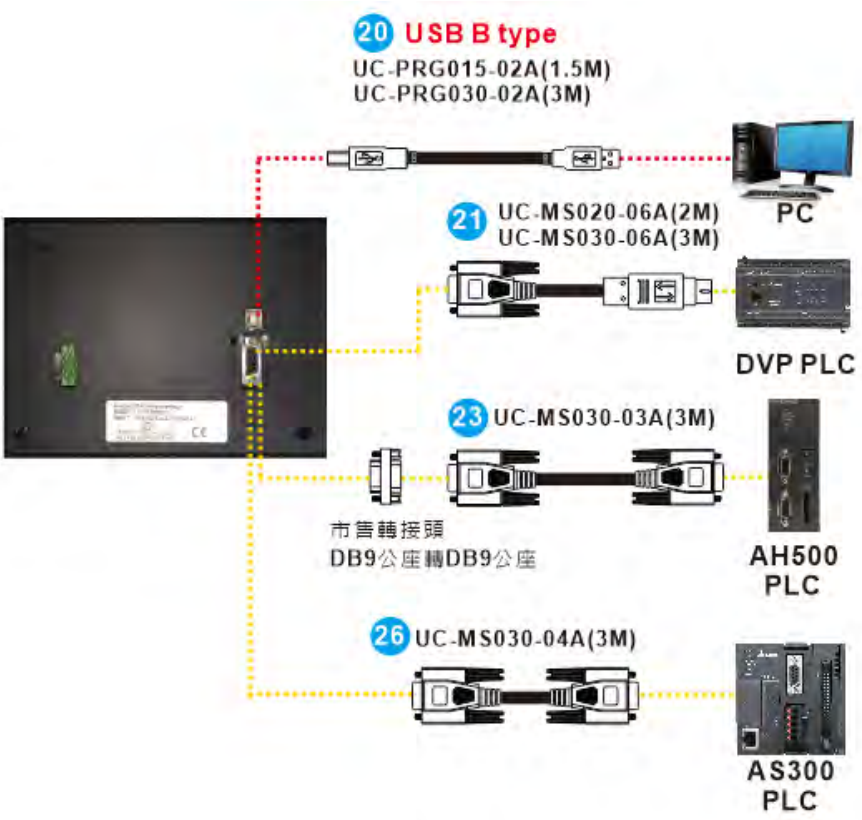

Note: Please refer to section 1.21 for more information about 1, 2, 3, etc.

DOP-B series (DOP-B07S411, DOP-B07S401K, DOP-B07S411K, DOP-B07S415, DOP-B07PS415)

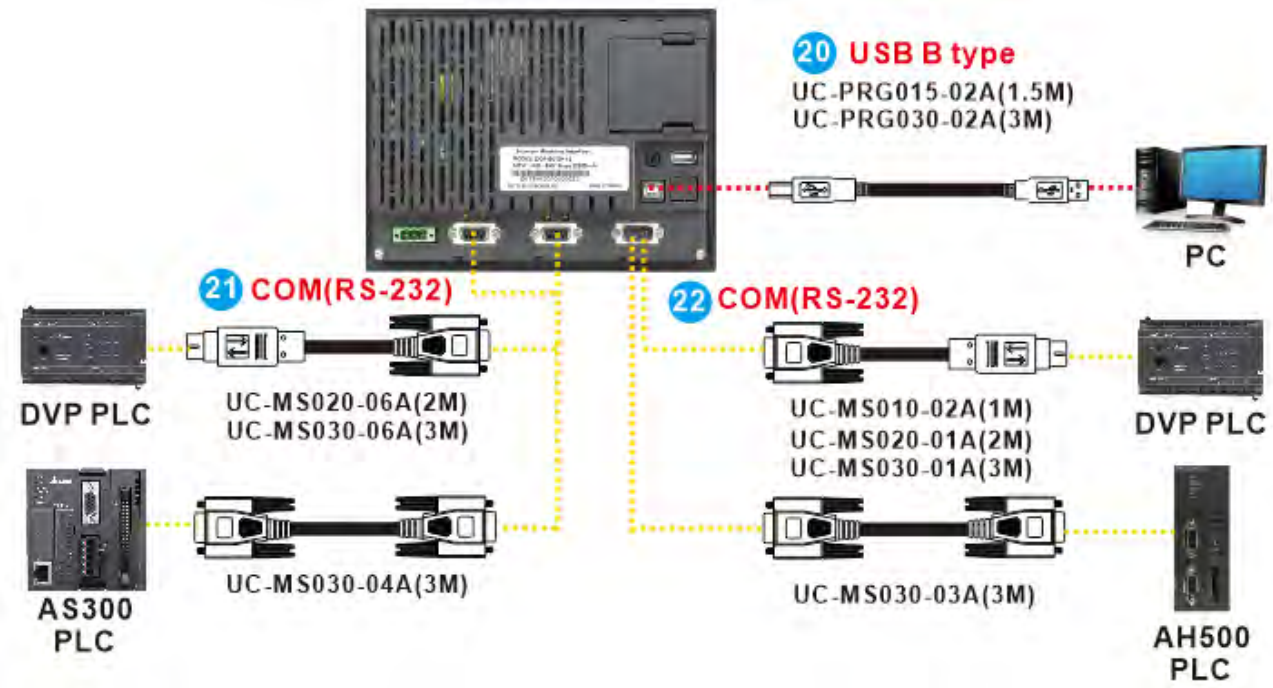

Note: Please refer to section 1.21 for more information about 1, 2, 3, etc.

DOP-B series (DOP-B07E415)

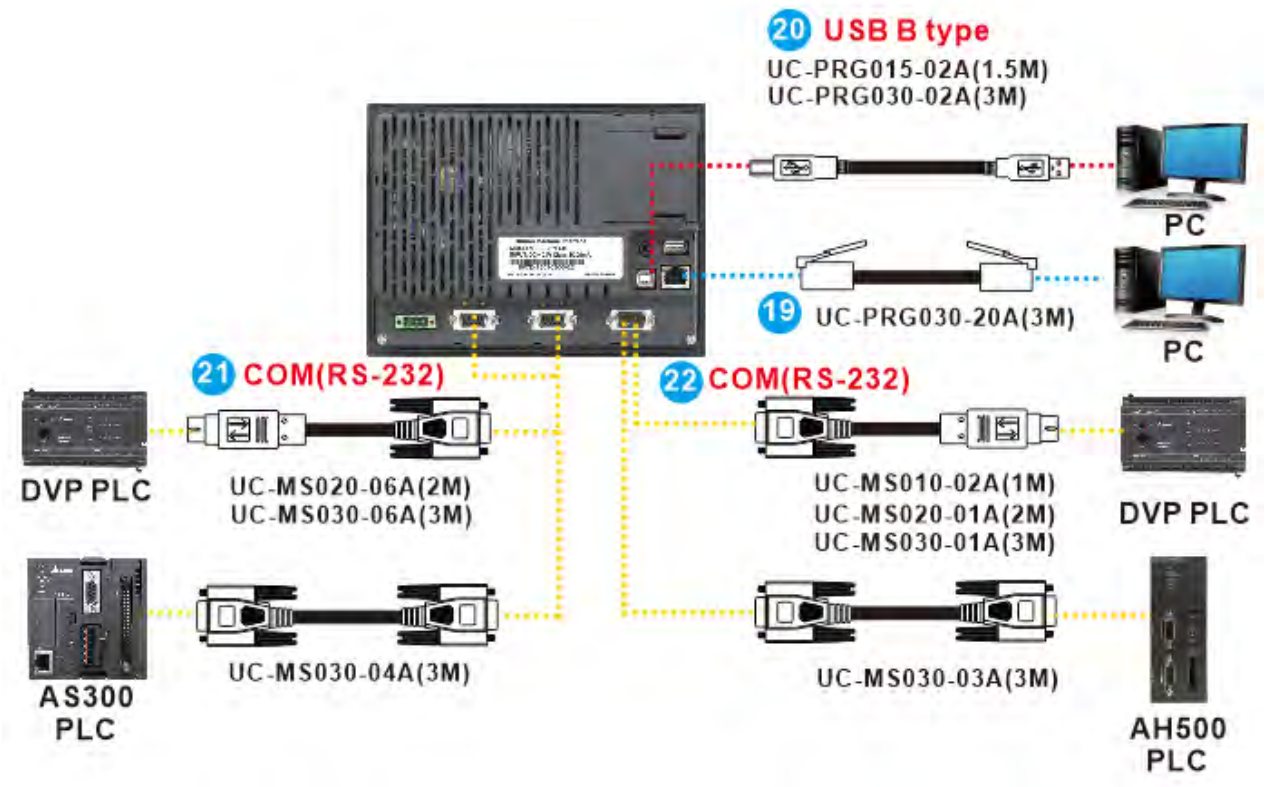

Note: Please refer to section 1.21 for more information about 1, 2, 3, etc.

DOP-B series (DOP-B07S515, DOP-B07PS515)

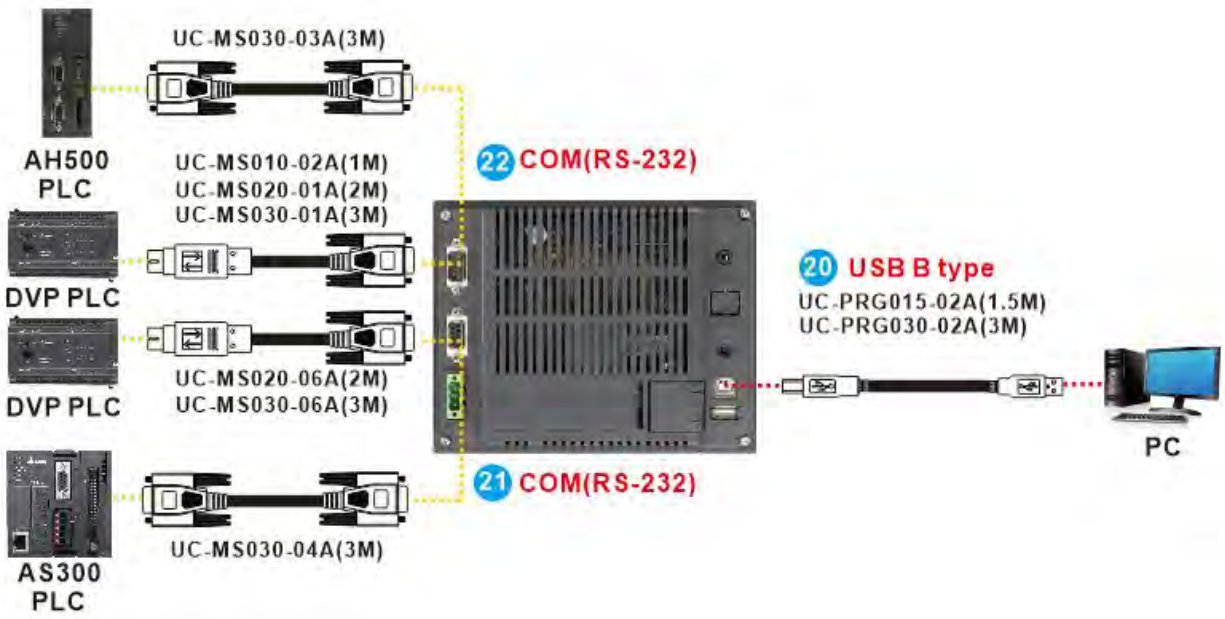

Note: Please refer to section 1.21 for more information about 1, 2, 3, etc.

DOP-B series (DOP-B07E515)

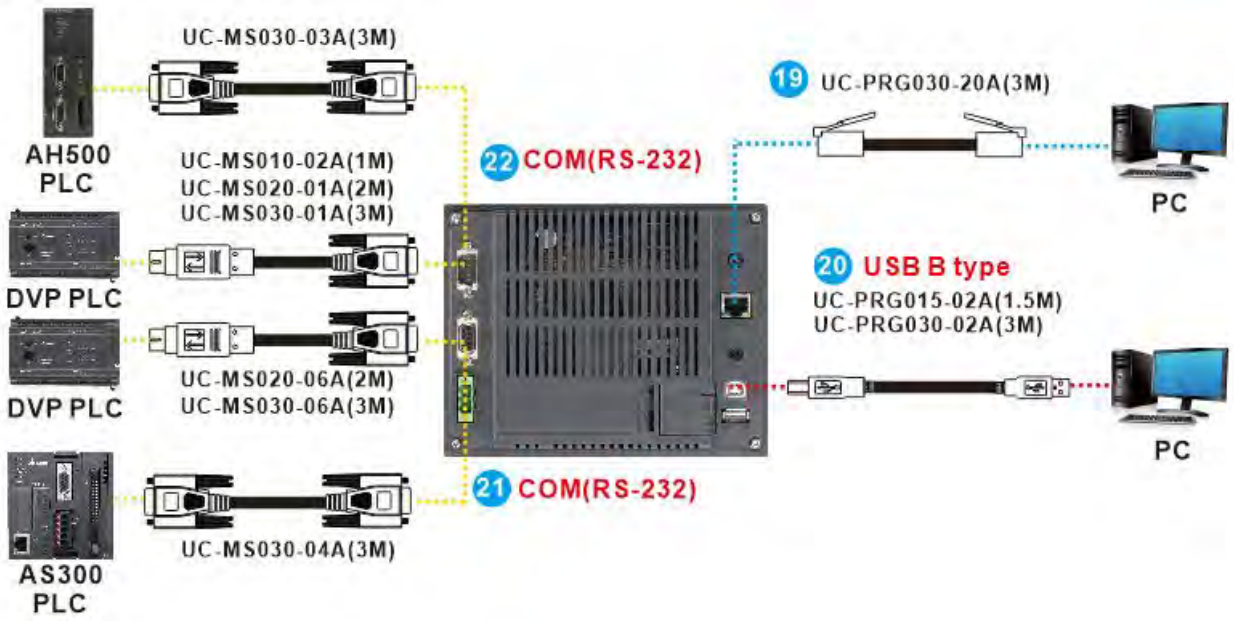

Note: Please refer to section 1.21 for more information about 1, 2, 3, etc.

DOP-B series (DOP-B08S515)

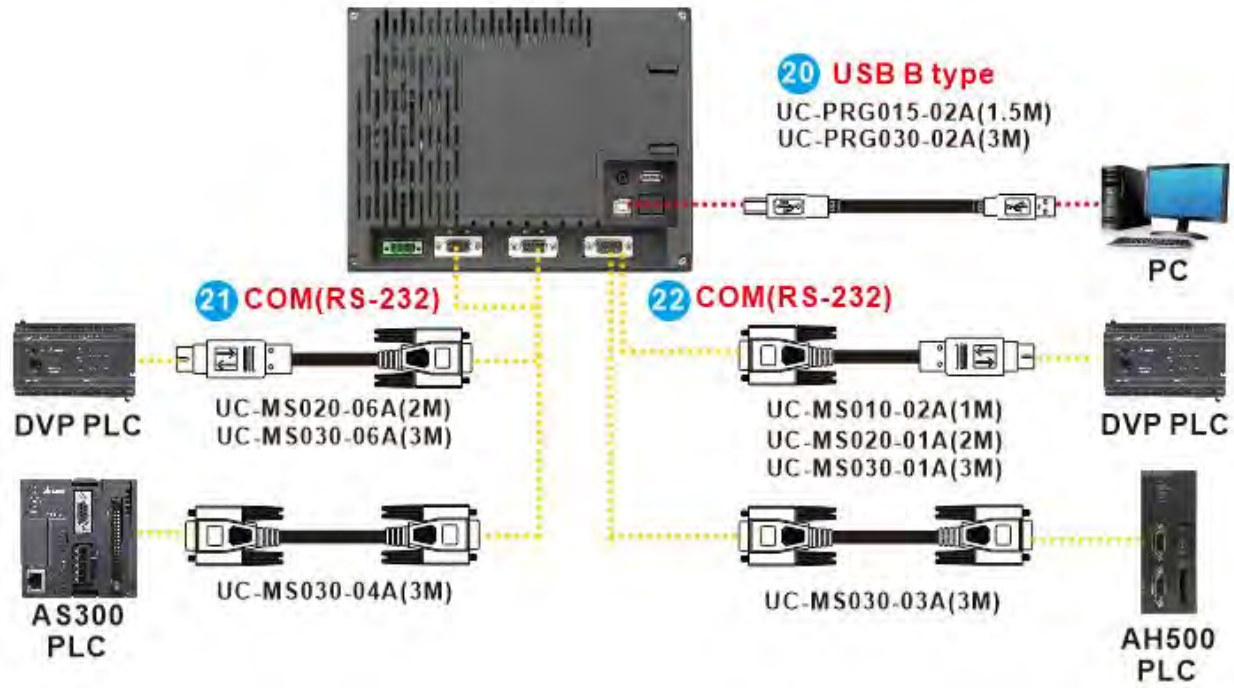

Note: Please refer to section 1.21 for more information about 1, 2, 3, etc.

DOP-B series (DOP-B08E515)

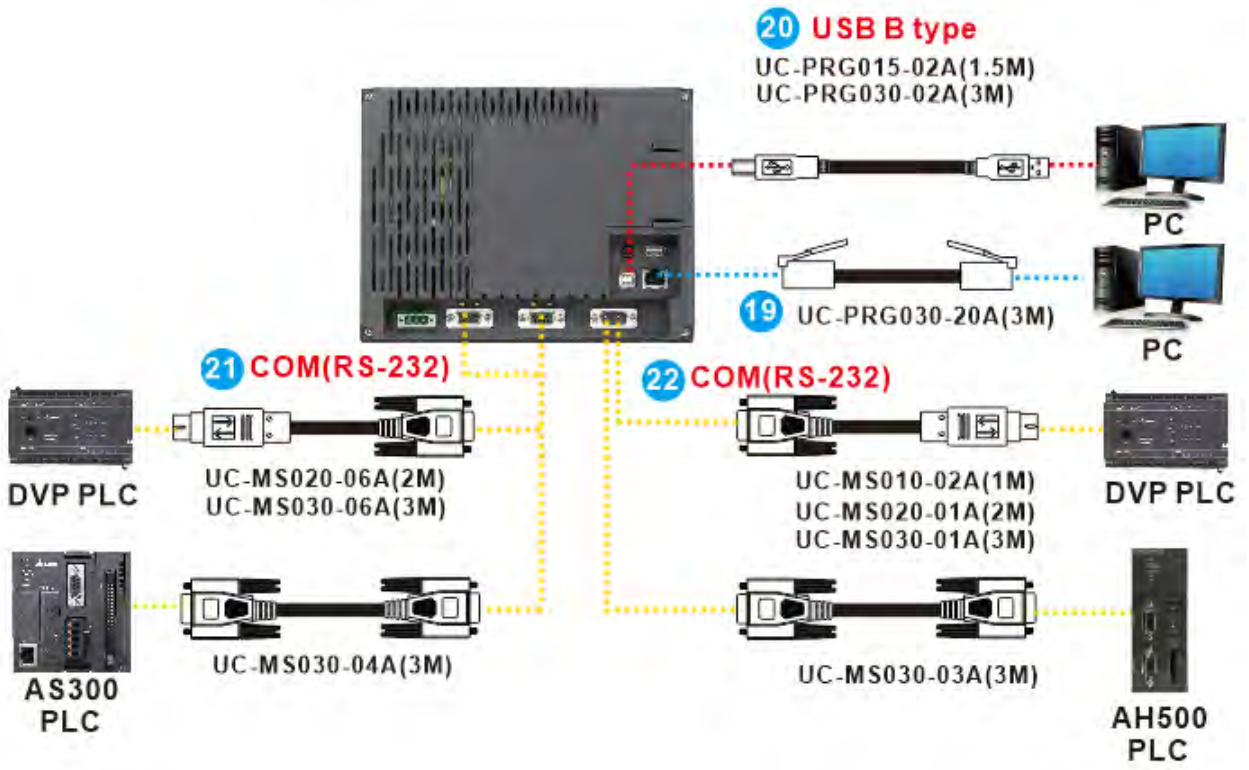

Note: Please refer to section 1.21 for more information about 1, 2, 3, etc.

DOP-B series (DOP-B10S411, DOP-B10S615)

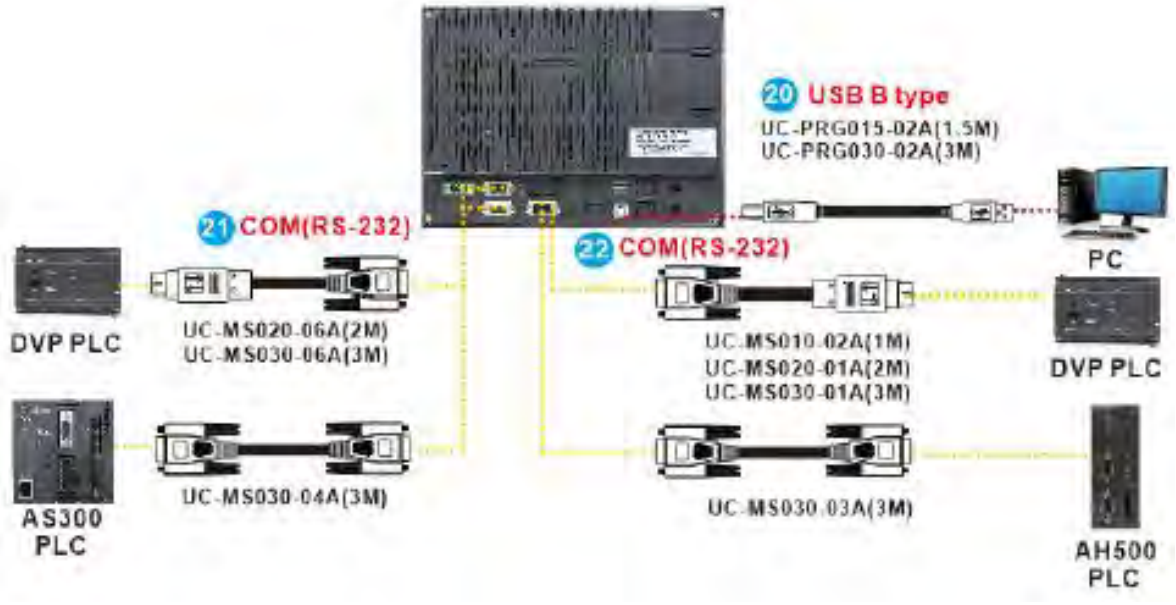

Note: Please refer to section 1.21 for more information about 1, 2, 3, etc.

DOP-B series (DOP-B10E615)

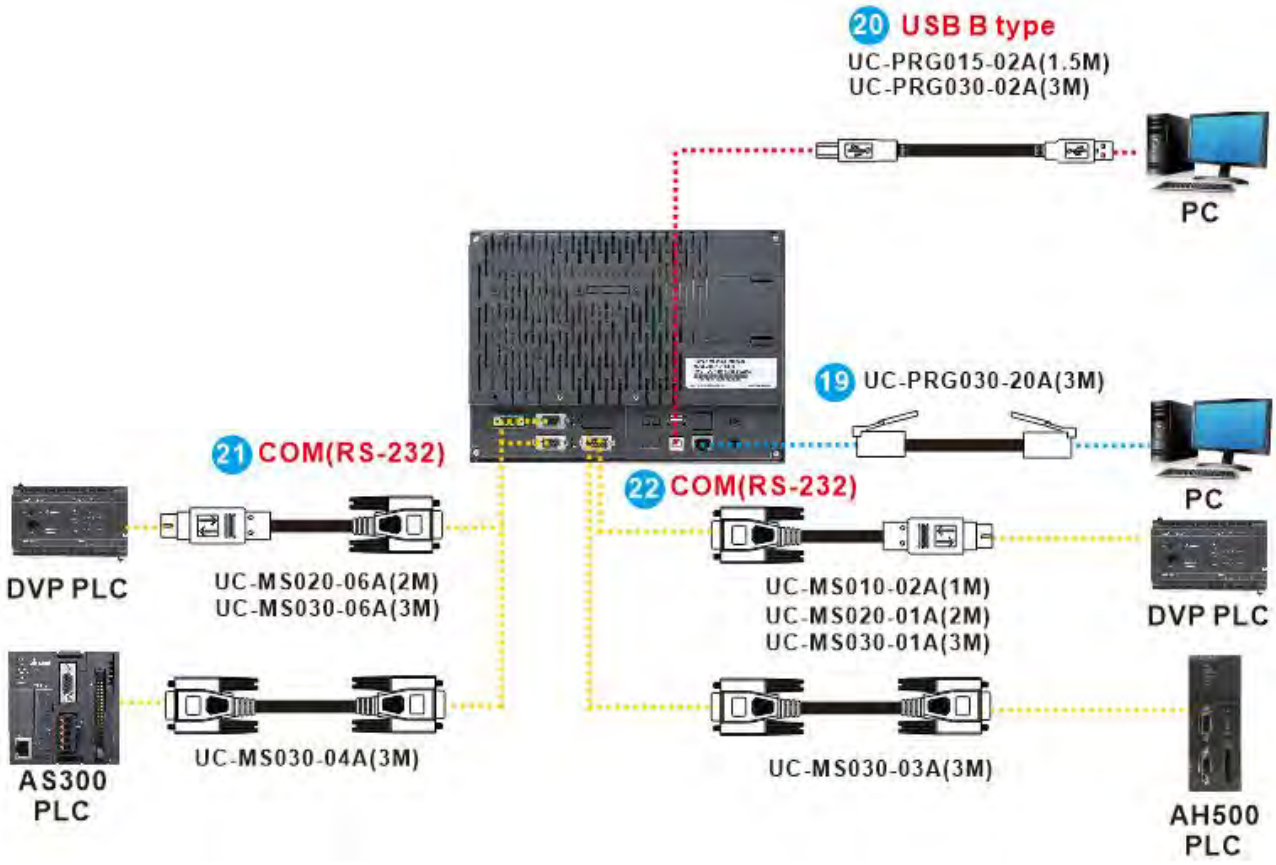

Note: Please refer to section 1.21 for more information about 1, 2, 3, etc.

DOP-B series (DOP-B10S511, DOP-B10VS511)

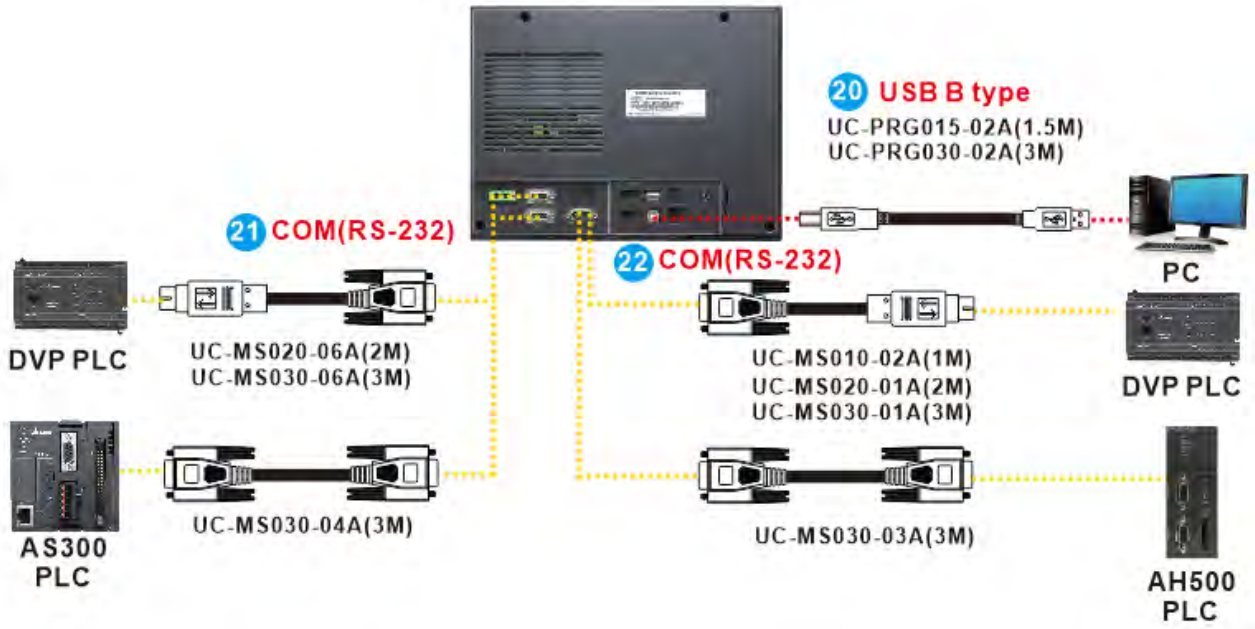

Note: Please refer to section 1.21 for more information about 1, 2, 3, etc.

DOP-B series (DOP-B10E515)

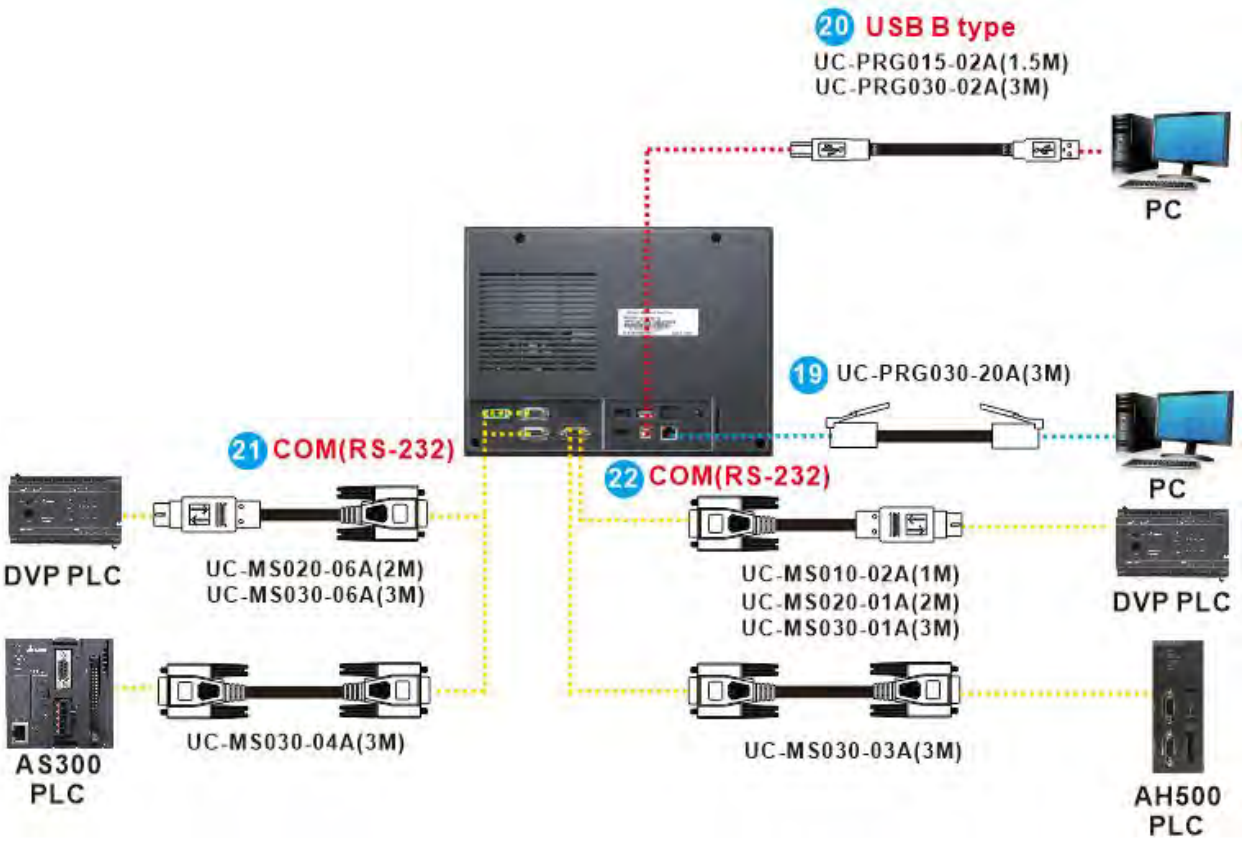

Note: Please refer to section 1.21 for more information about 1, 2, 3, etc.

1.18 DOP-W Series

DOP-W series (DOP-W105B, DOP-W127B)

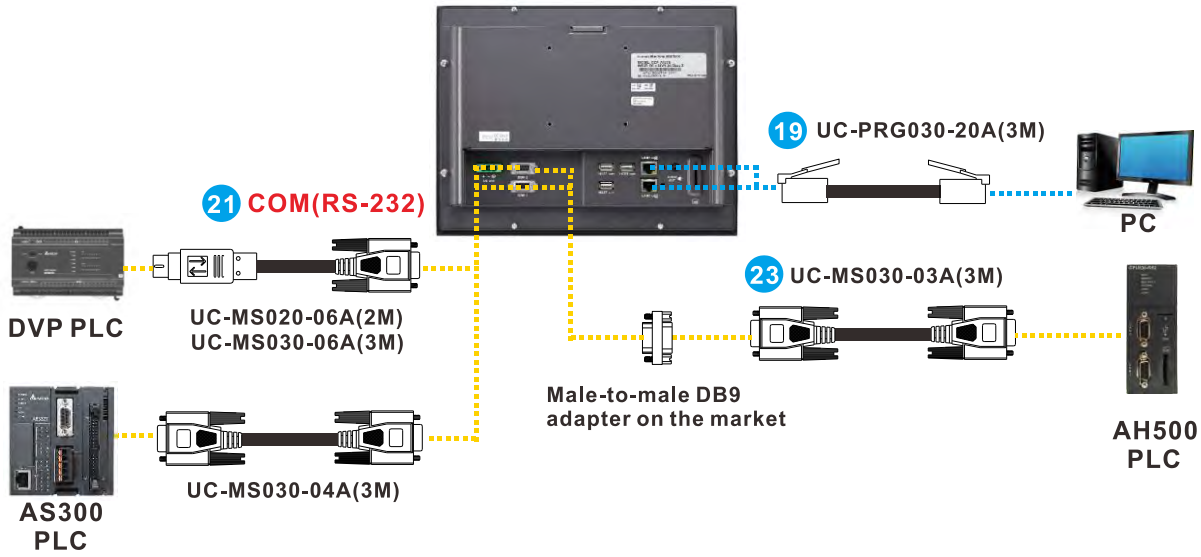

Note: Please refer to section 1.21 for more information about 1, 2, 3, etc.

DOP-W series (DOP-W157B)

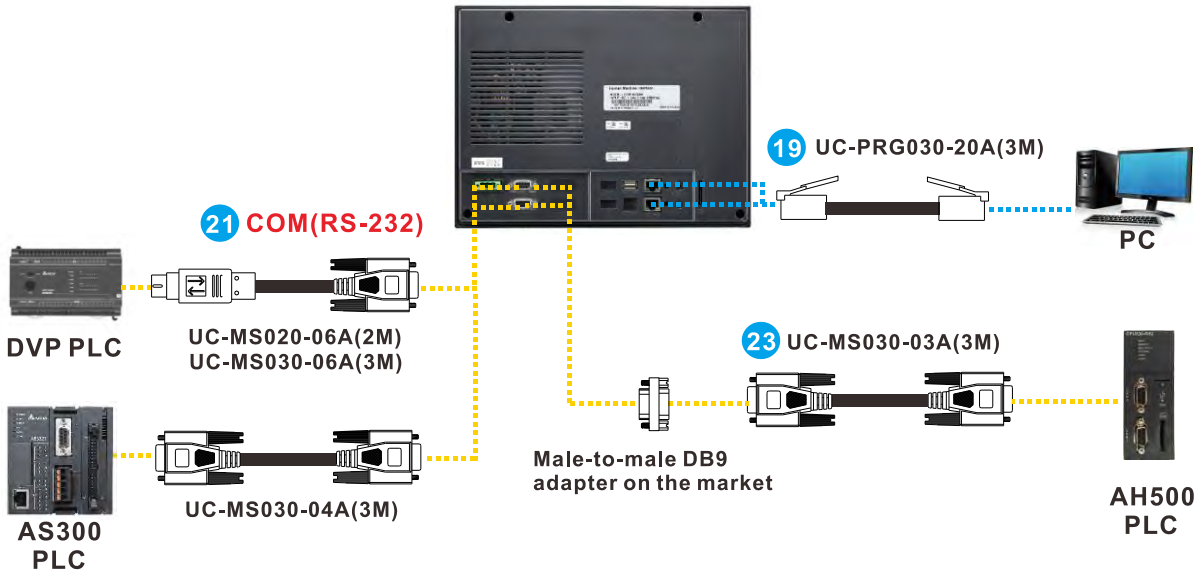

Note: Please refer to section 1.21 for more information about 1, 2, 3, etc.

1.19 DOP Series HMIs and the Delta Machine Vision System (RS-232)

Applicable DOP series:

- **DOP-B series** (DOP-B03E211, DOP-B03S210, DOP-B03S211, DOP-B05S111, DOP-B07E415, DOP-B07E515, DOP-B07PS415, DOP-B07PS515, DOP-B07S401K, DOP-B07S410, DOP-B07S411, DOP-B07S411K, DOP-B07S415, DOP-B07S515, DOP-B08E515, DOP-B08S515, DOP-B10E515, DOP-B10E615, DOP-B10S411, DOP-B10S511, DOP-B10S615, DOP-B10VS511)
- **DOP-W series** (DOP-W105B, DOP-W127B, DOP-W157B)

Note: Please refer to section 1.21 for more information about 1, 2, 3, etc.

1.20 DOP Series HMIs and the Delta Machine Vision System (Ethernet)

Applicable DOP series:

- **DOP-B series** (DOP-B03E211, DOP-B07E415, DOP-B07E515, DOP-B08E515, DOP-B10E515, DOP-B10E615)
- **DOP-W series**(DOP-W105B, DOP-W127B, DOP-W157B)

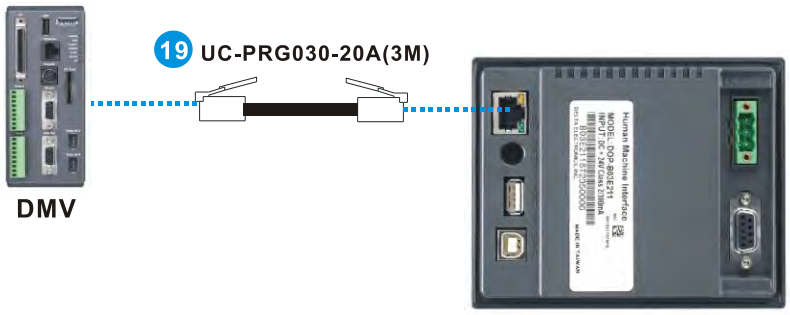

Note: Please refer to section 1.21 for more information about 1, 2, 3, etc.

1.21 Cable Models

1 COM1 (RS-232)

CPU	Adapter	Module/Interface card	Cable	Machine connected
PLC	--	--	8-pin male min-DIN connector ↔ Female DB9 connector	PC/HMI/TP
			UC-MS010-02A (1 m) (Figure 1)	
			UC-MS020-01A (2 m) (Figure 2)	
			UC-MS030-01A (3 m) (Figure 2)	

CPU	Adapter	Module/Interface card	Cable	Machine connected
PLC	--	--	8-pin male mini-DIN connector ↔ USB connector	PC
			UC-PRG020-12A (2M) (Figure 3A)	

CPU	Adapter	Module/Interface card	Cable	Machine connected
PLC	--	--	8-pin male mini-DIN connector ↔ Male DB9 connector	HMI
			UC-MS020-06A (2 m) (Figure 4)	
			UC-MS030-06A (3 m) (Figure 4)	

2 COM2 (RS-485)

CPU	Adapter	Module/Interface card	Cable	Machine connected
PLC	--	--	RS-485 ↔ USB	PC
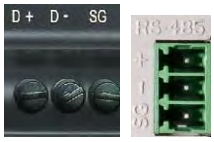			IFD6500 (Figure 5)	

CPU	Adapter	Module/Interface card	Cable	Machine connected
PLC	--	--	RS-485 ↔ RS-232	PC
			IFD8500 (Figure 6)	

3 COM3 (RS-485)

CPU	Adapter	Module/Interface card	Cable	Machine connected
PLC	--	--	RS-485 ↔ USB	PC
			IFD6500 (Figure 5)	

CPU	Adapter	Module/Interface card	Cable	Machine connected
PLC	--	--	RS-485 ↔ RS-232	PC
			IFD8500 (Figure 6)	

4 Mini USB

CPU	Adapter	Module/Interface card	Cable	Machine connected
PLC	--	--	Mini USB ↔ USB	PC
			UC-PRG015-01A (1.5 m) (Figure 10)	
			UC-PRG030-01A (3 m) (Figure 10)	

5 COM1/COM2 (RS-485)

CPU	Adapter	Module/Interface card	Cable	Machine connected
PLC	--	DVPSCM12-SL (Figure 9) DVPSCM52-SL (Figure 9)	RS-485 ↔ USB	PC
			IFD6500 (Figure 5)	

CPU	Adapter	Module/Interface card	Cable	Machine connected
PLC	--	--	RS-485 ↔ RS-232	PC
			IFD8500 (Figure 6)	

6 RS-232

CPU	Adapter	Module/Interface card	Cable	Machine connected
PLC	--	DVPEN01-SL (Figure 8)	8-pin male mini-DIN connector ↔ Female DB9 connector	PC/HMI/TP
			UC-MS010-02A (1 m) (Figure 1)	
			UC-MS020-01A (2 m) (Figure 2)	
			UC-MS030-01A (3 m) (Figure 2)	

CPU	Adapter	Module/Interface card	Cable	Machine connected
PLC	--	DVPEN01-SL (Figure 8)	8-pin male mini-DIN connector ↔ Male DB9 connector	HMI
			UC-MS020-06A (2 m) (Figure 4)	
			UC-MS030-06A (3 m) (Figure 4)	

CPU	Adapter	Module/Interface card	Cable	Machine connected
PLC	--	DVPEN01-SL (Figure 8)	8-pin male mini-DIN connector ↔ USB connector	PC
			UC-PRG020-12A (2M) (Figure 3A)	

CPU	Adapter	Module/Interface card	Cable	Machine connected
PLC	--	DVPEN01-SL (Figure 8)	RJ45 ↔ RJ45	PC/HMI
			UC-PRG030-20A (3M) (Figure 7)	

7 Ethernet

CPU	Adapter	Module/Interface card	Cable	Machine connected
PLC	--	--	RJ45 ↔ RJ45	PC/HMI
			UC-PRG030-20A (3M) (Figure 7)	

8 COM3 (RS-232)

CPU	Adapter	Module/Interface card	Cable	Machine connected
PLC	--	DVP-FEN01 (Figure 14)	8-pin male mini-DIN connector ↔ Female DB9 connector	PC/HMI/TP
			UC-MS010-02A (1 m) (Figure 1)	
			UC-MS020-01A (2 m) (Figure 2)	
			UC-MS030-01A (3 m) (Figure 2)	

CPU	Adapter	Module/Interface card	Cable	Machine connected
PLC	--	DVP-FEN01 (Figure 14)	8-pin male mini-DIN connector ↔ Male DB9 connector	HMI
			UC-MS020-06A (2 m) (Figure 4)	
			UC-MS030-06A (3 m) (Figure 4)	

CPU	Adapter	Module/Interface card	Cable	Machine connected
PLC	--	DVP-FEN01 (Figure 14)	8-pin male mini-DIN connector ↔ USB connector	PC
			UC-PRG020-12A (2M) (Figure 3A)	

CPU	Adapter	Module/Interface card	Cable	Machine connected
PLC	--	DVP-FEN01 (Figure 14)	RJ45 ↔ RJ45	PC/HMI
			UC-PRG030-20A (3M) (Figure 7)	

9 COM3 (RS-232)

CPU	Adapter	Module/Interface card	Cable	Machine connected
PLC	--	DVP-F232 (Figure 15)	Female DB9 connector ↔ USB connector	PC
			UC-PRG020-12A (2M) (Figure 3B)	

CPU	Adapter	Module/Interface card	Cable	Machine connected
PLC	--	DVP-F232 (Figure 15)	Female DB9 connector ↔ Female DB9 connector	PC
			UC-PRG030-10A (3M) (Figure 12)	

10 COM3 (RS-485)

CPU	Adapter	Module/Interface card	Cable	Machine connected
PLC	--	DVP-F485 (Figure 16)	RS-485 ↔ USB	PC
			IFD6500 (Figure 5)	

CPU	Adapter	Module/Interface card	Cable	Machine connected
PLC	--	DVP-F485 (Figure 16)	RS-485 ↔ RS-232	PC
			IFD8500 (Figure 6)	

11 COM3 (RS-232)

CPU	Adapter	Module/Interface card	Cable	Machine connected
PLC	Male-to-male null modem adapter	F232S (Figure 11)	Female DB9 connector ↔ USB connector	PC
			UC-PRG020-12A (2M) (Figure 3B)	

CPU	Adapter	Module/Interface card	Cable	Machine connected
PLC	Male-to-male null modem adapter	F232S (Figure 11)	Female DB9 connector ↔ Female DB9 connector	PC
			UC-PRG030-10A (3M) (Figure 12)	

12 COM3 (RS-485)

CPU	Adapter	Module/Interface card	Cable	Machine connected
PLC	--	F485S (Figure 13)	RS-485 ↔ USB	PC
			IFD6500 (Figure 5)	

CPU	Adapter	Module/Interface card	Cable	Machine connected
PLC	--	F485S (Figure 13)	RS-485 ↔ RS-232	PC
			IFD8500 (Figure 6)	

13 COM1 (RS-232)

CPU	Adapter	Module/Interface card	Cable	Machine connected
TP	--	--	Female DB9 connector ↔ USB connector	PC
			UC-PRG020-12A (2M) (Figure 3B)	

CPU	Adapter	Module/Interface card	Cable	Machine connected
TP	--	--	Female DB9 connector ↔ Female DB9 connector	PC
			UC-PRG030-10A (3M) (Figure 12)	

CPU	Adapter	Module/Interface card	Cable	Machine connected
TP	--	--	Female DB9 connector ↔ 8-pin male mini-DIN connector	DVP PLC
			UC-MS010-02A (1 m) (Figure 1)	
			UC-MS020-01A (2 m) (Figure 2)	
			UC-MS030-01A (3 m) (Figure 2)	

CPU	Adapter	Module/Interface card	Cable	Machine connected
TP	--	--	Female DB9 connector ↔ Male DB9 connector	AH500
			UC-MS030-03A (3M) (Figure 18)	

14 USB Type-B

CPU	Adapter	Module/Interface card	Cable	Machine connected
TP	--	--	USB Type-B ↔ USB Type-A	PC
			UC-PRG015-02A (1.5 m) (Figure 19)	
			UC-PRG030-02A (3 m) (Figure 19)	

15 COM (RS-485)

CPU	Adapter	Module/Interface card	Cable	Machine connected
AH500	--	AH10SCM-5A (Figure 21)	RS-485 ↔ USB	PC
			IFD6500 (Figure 5)	

CPU	Adapter	Module/Interface card	Cable	Machine connected
AH500	--	AH10SCM-5A (Figure 21)	RS-485 ↔ RS-232	PC
			IFD8500 (Figure 6)	

16 COM (RS-485)

CPU	Adapter	Module/Interface card	Cable	Machine connected
AH500	--	AH10EN-5A (Figure 20)	RJ45 ↔ RJ45	PC/HMI
			UC-PRG030-20A (3M) (Figure 7)	

17 COM (RS-232)

CPU	Adapter	Module/Interface card	Cable	Machine connected
AH500	Male-to-male DB9 adapter (cable accessory)	--	Female DB9 connector ↔ USB connector	PC
			UC-PRG020-12A (2M) (Figure 3B)	

CPU	Adapter	Module/Interface card	Cable	Machine connected
AH500	Male-to-male DB9 adapter	--	Female DB9 connector ↔ Female DB9 connector	PC
			UC-PRG030-10A (3M) (Figure 12)	

CPU	Adapter	Module/Interface card	Cable	Machine connected
AH500	Male-to-male DB9 adapter	--	Female DB9 connector ↔ Male DB9 connector	PC/TP/HMI
			UC-MS030-03A (3M) (Figure 18)	

CPU	Adapter	Module/Interface card	Cable	Machine connected
AH500	--	--	Male DB9 connector ↔ Male DB9 connector	DMV
			UC-MS030-04A (3M) (Figure 17)	

CPU	Adapter	Module/Interface card	Cable	Machine connected
AS300	--	AS-F232 (Figure 22)	Male DB9 connector ↔ Female DB9 connector	PC/TP/HMI
			Standard cable on the marker	

CPU	Adapter	Module/Interface card	Cable	Machine connected
AS300	Male-to-male DB9 adapter	--	Female DB9 connector ↔ Male DB9 connector	DMV
			UC-MS030-03A (3M) (Figure 18)	

18 COM (RS-485)

CPU	Adapter	Module/Interface card	Cable	Machine connected
AH500	--	--	RS-485 ↔ USB	PC
			IFD6500 (Figure 5)	

CPU	Adapter	Module/Interface card	Cable	Machine connected
AH500	--	--	RS-485 ↔ RS-232	PC
			IFD8500 (Figure 6)	

CPU	Adapter	Module/Interface card	Cable	Machine connected
AS300	--	AS-F485 (Figure 22)	RS-485 ↔ USB	PC
			IFD6500 (Figure 5)	

CPU	Adapter	Module/Interface card	Cable	Machine connected
AS300	--	AS-F485 (Figure 23)	RS-485 ↔ RS-232	PC
			IFD8500 (Figure 6)	

19 Ethernet

CPU	Adapter	Module/Interface card	Cable	Machine connected
DOP	--	--	RJ45 ↔ RJ45	PC
			UC-PRG030-20A (3M) (Figure 7)	

CPU	Adapter	Module/Interface card	Cable	Machine connected
DOP	--	--	RJ45 ↔ RJ45	DMV
			UC-PRG030-20A (3M) (Figure 7)	

20 USB Type-B

CPU	Adapter	Module/Interface card	Cable	Machine connected
DOP	--	--	USB Type-B ↔ USB Type-A	PC
			UC-PRG015-02A (1.5 m) (Figure 19)	
			UC-PRG030-02A (3 m) (Figure 19)	

21 COM (RS-232)

CPU	Adapter	Module/Interface card	Cable	Machine connected
DOP	--	--	Male DB9 connector ↔ 8-pin male mini-DIN connector	PLC
			UC-MS020-06A (2 m) (Figure 4)	
			UC-MS030-06A (3 m) (Figure 4)	

CPU	Adapter	Module/Interface card	Cable	Machine connected
DOP	--	--	Male DB9 connector ↔ Male DB9 connector	AS300
			UC-MS030-04A (3M) (Figure 17)	

22 COM (RS-232)

CPU	Adapter	Module/Interface card	Cable	Machine connected
DOP	--	--	Female DB9 connector ↔ 8-pin male mini-DIN connector	PLC
			UC-MS010-02A (1 m) (Figure 1)	
			UC-MS020-01A (2 m) (Figure 2)	
			UC-MS030-01A (3 m) (Figure 2)	

CPU	Adapter	Module/Interface card	Cable	Machine connected
DOP	--	--	Female DB9 connector ↔ Male DB9 connector	AH500
			UC-MS030-03A (3 m) (Figure 18)	

23 COM (RS-232)

CPU	Adapter	Module/Interface card	Cable	Machine connected
DOP	Male-to-male DB9 adapter	--	Female DB9 connector ↔ Male DB9 connector	AH500
			UC-MS030-03A (3 m) (Figure 18)	

24 COM (RS-232)

CPU	Adapter	Module/Interface card	Cable	Machine connected
PLC	--	--	8-pin male mini-DIN connector ↔ Male DB9 connector	DMV
			UC-MS020-06A (2 m) (Figure 4)	
			UC-MS030-06A (3 m) (Figure 4)	

25 COM (RS-232)

CPU	Adapter	Module/Interface card	Cable	Machine connected
DOP	--	--	Male DB9 connector ↔ Male DB9 connector	DMV
			UC-MS030-04A (3 m) (Figure 17)	

26 COM (RS-232)

CPU	Adapter	Module/Interface card	Cable	Machine connected
DOP	--	--	Male DB9 connector ↔ Male DB9 connector	AS300
			UC-MS030-04A (3 m) (Figure 17)	

1.22 Descriptions of Cable Models

Figure 1	UC-MS010-02A (1 m)	8-pin male mini-DIN connector (90 degrees) ↔ Female DB9 connector

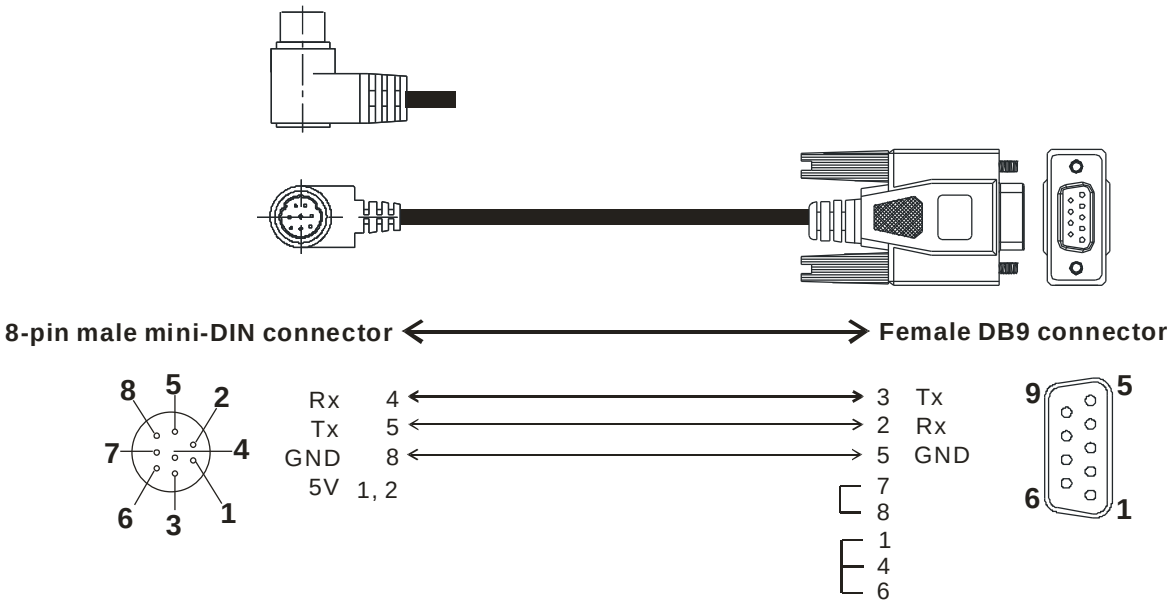

Figure 2	UC-MS020-01A (2 m) UC-MS030-01A (3 m)	8-pin male mini-DIN connector ↔ Female DB9 connector

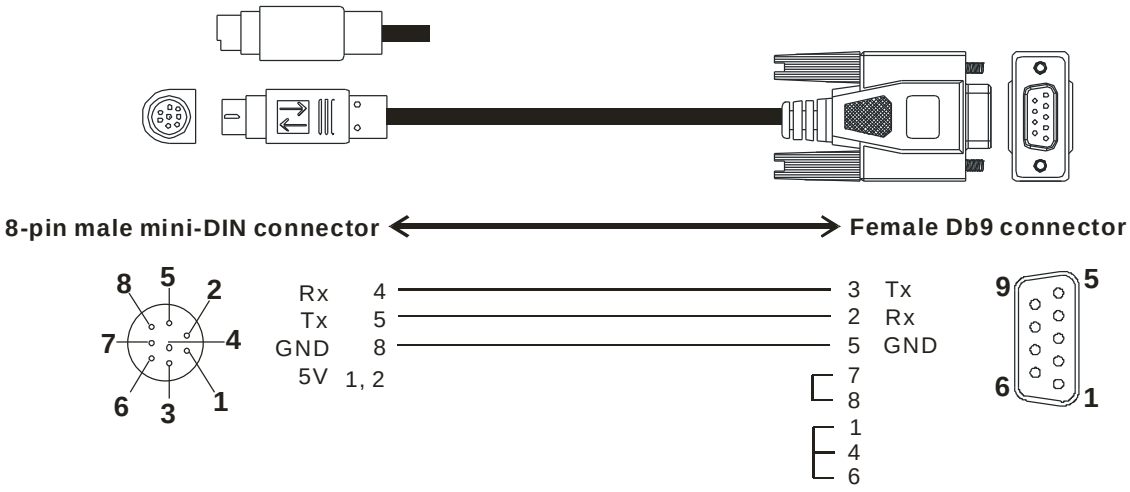

Figure 3A	UC-PRG020-12A (2 m)	8-pin male mini-DIN connector ↔ USB connector
	(Accessory: Male-to-male DB9 adapter)	

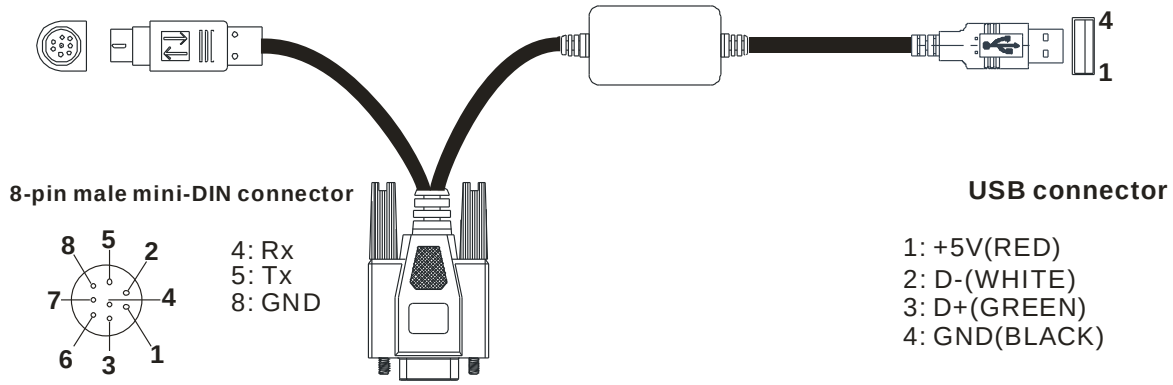

◆ **Note: Please refer to Appendix B for more information about installing a USB driver.**

Figure 3B	UC-PRG020-12A (2 m)	Female DB9 connector ↔ USB connector
	(Accessory: Male-to-male DB9 adapter)	

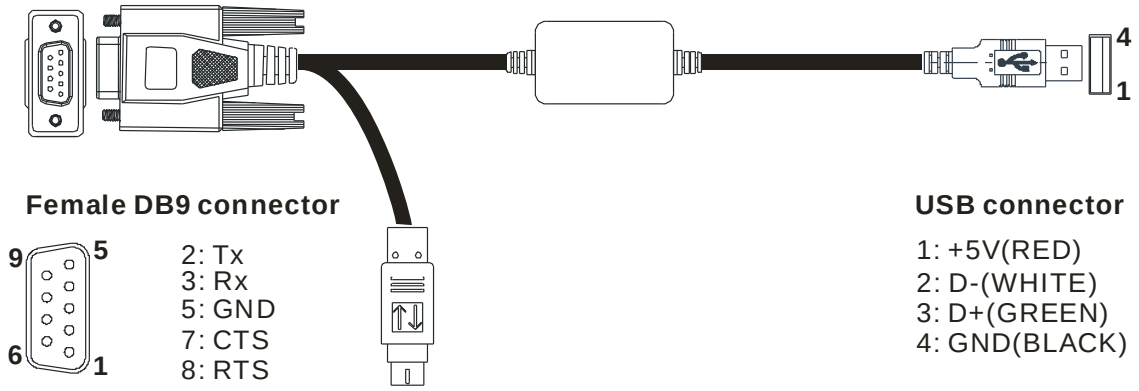

◆ **Note: Please refer to Appendix B for more information about installing a USB driver.**

Figure 4	UC-MS020-06A (2 m) UC-MS030-06A (3 m)	8-pin male mini-DIN connector ↔ Male DB9 connector

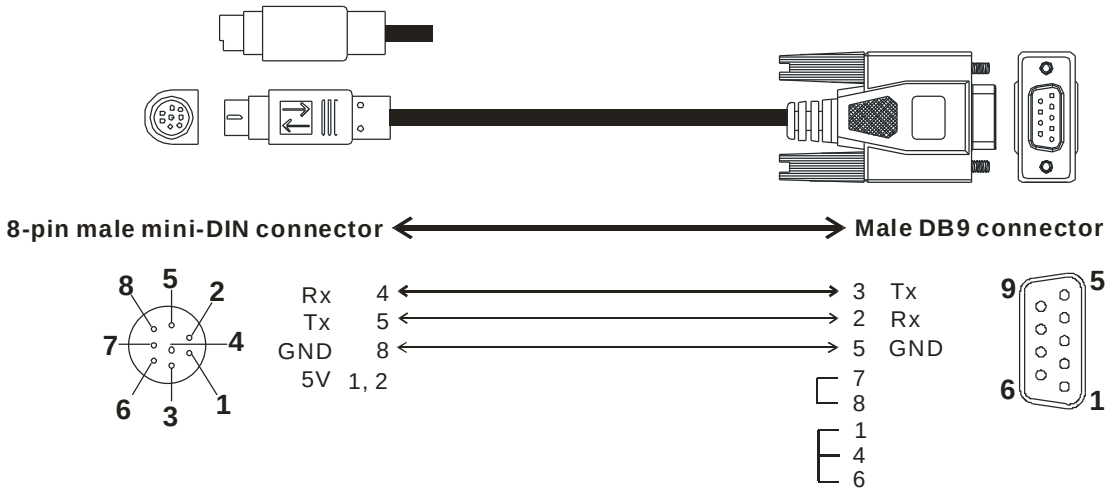

Figure 5	IFD6500	RS-485 ↔ USB

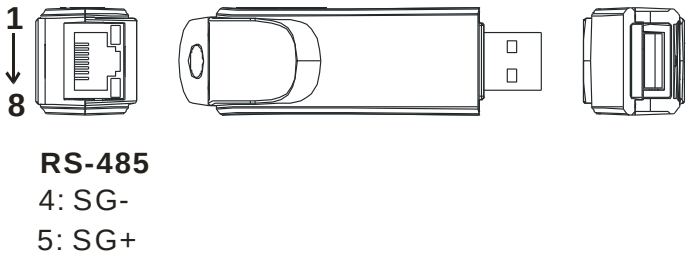

◆ **Note: Please refer to Appendix B for more information about installing a USB driver.**

Figure 5	IFD6500 accessory	RJ11 ↔ RS-485

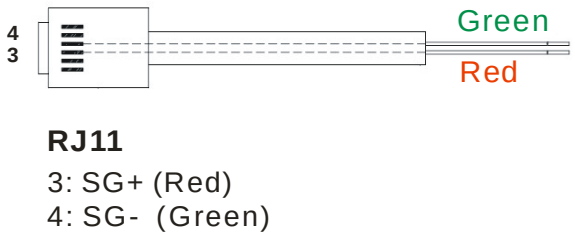

Figure 6	IFD8500	RS-485 ↔ RS-232

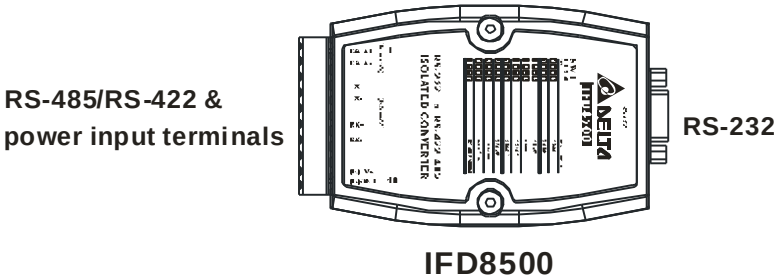

RS-485/RS-422 & power input terminals		RS-232
1: RS-485 DATA+ 2: RS-485 DATA- 3: -- 4: RS-422 TX+ 5: RS-422 TX-	6: RS-422 RX+ 7: RS-422 RX- 8: -- 9: +Vs (positive power input) 10: GND (Negative power input)	2: Rx 3: Tx 5: GND

◆ **Note: If the RS-485 interface is connected to a PLC, the station address set in software needs to be the same as the station address of the PLC.**

Figure 7	UC-PRG030-20A (3 m)	RJ45 ↔ RJ45

Figure 8	DVPEN01-SL	
	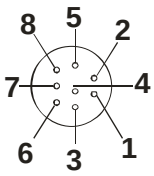 4: Rx 5: Tx 8: GND	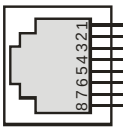 1: Tx+ 2: Tx- 3: Rx+ 6: Rx-

Figure 9	DVPSCM12-SL/DVPSCM52-SL	
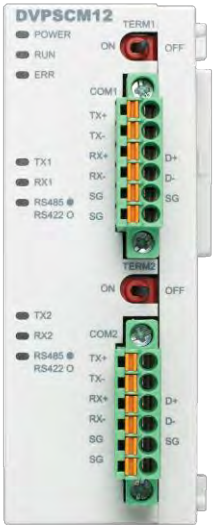 DVPSCM12-SL	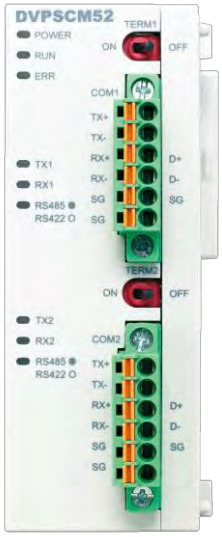 DVPSCM52-SL	1 • 2 • 3 D+ 4 D- 5 SG 6 SG

Figure 10	UC-PRG015-01A (1.5 m) UC-PRG030-01A (3 m)	Mini USB ↔ USB

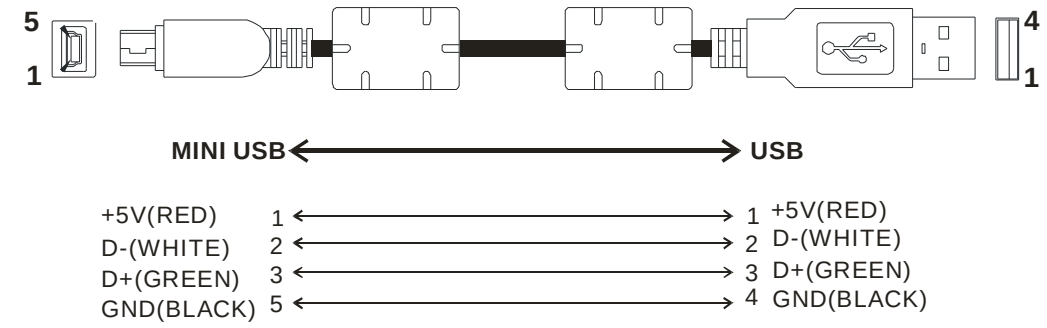

Figure 11	F232S

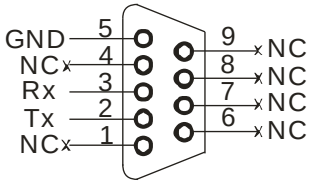

Figure 12	UC-PRG030-10A (3 m)	Female DB9 connector ↔ Female DB9 connector

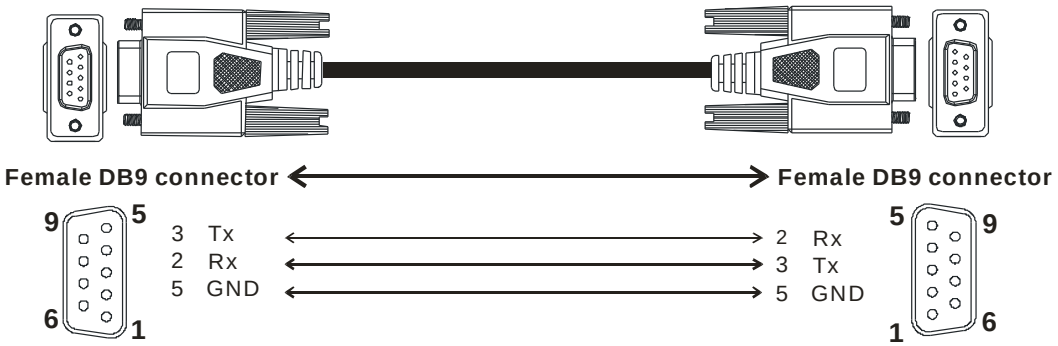

Figure 12	UC-PRG030-10A (3 m)	Female DB9 connector ↔ Female DB9 connector + Null modem adapter

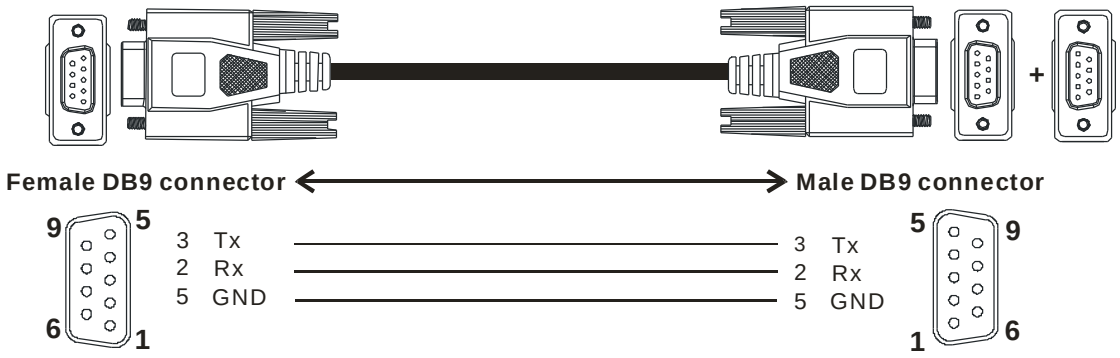

Figure 13	F485S

D+
D-
•
•
•

D+: Signal (+ pole)

D-: Signal (- pole)

Figure 14	DVP-FEN01

8-pin male mini-DIN connector

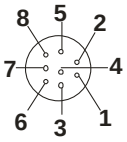

4: Rx
5: Tx
8: GND

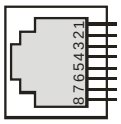

1: Tx+
2: Tx-
3: Rx+
6: Rx-

Figure 15	F232

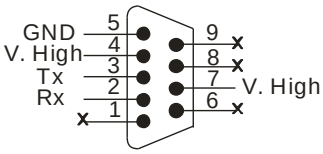

V. High: High electrical potential, i.e. logical value 1

Figure 16	F485

D+
D-
•
•
•

D+: Signal (+ pole)

D-: Signal (- pole)

Figure 17	UC-MS030-04A (3 m)	Male DB9 connector ↔ Male DB9 connector

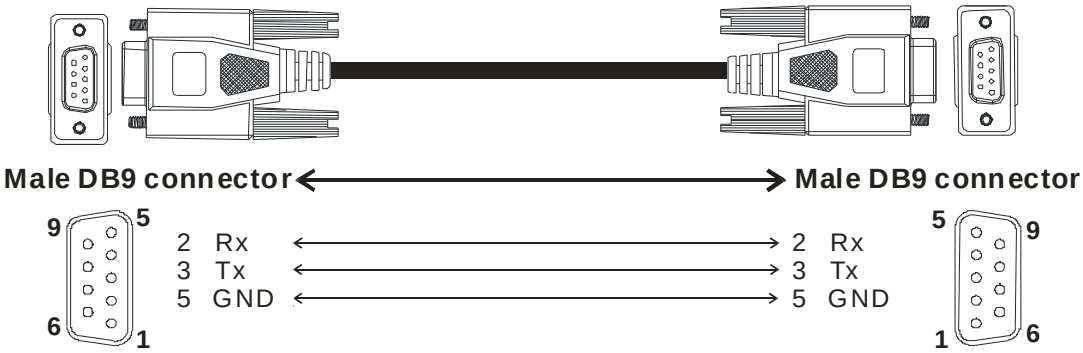

Figure 18	UC-MS030-03A (3 m)	Female DB9 connector ↔ Male DB9 connector

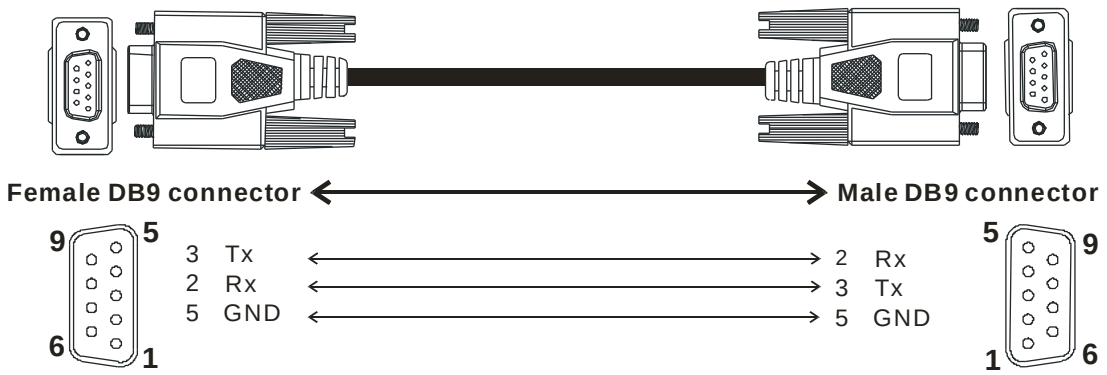

Figure 19	UC-PRG015-02A (1.5 m) UC-PRG030-02A (3 m)	USB Type-B ↔ USB Type-A

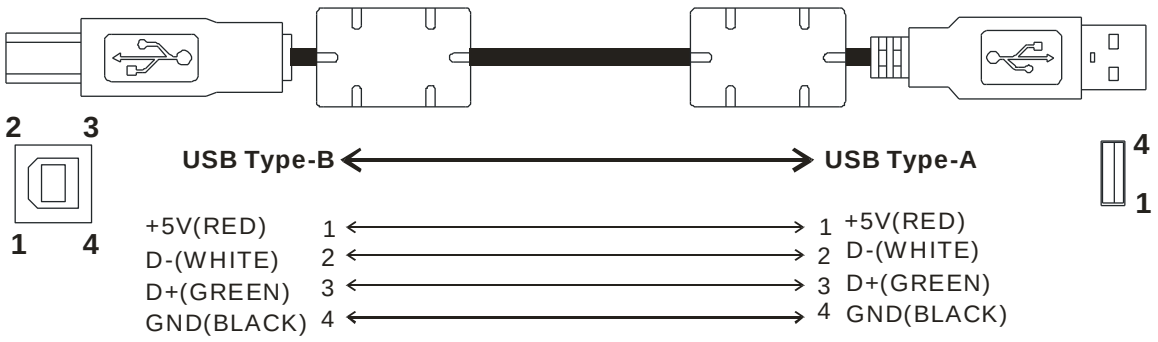

Figure 20	AH10EN-5A
	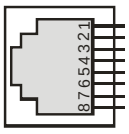 1: Tx+ 2: Tx- 3: Rx+ 6: Rx-

Figure 21	AH10SCM-5A
	1 • 2 • 3 D+ 4 D- 5 GND 6 FG

Figure 22	AS-F232
	2: Rx 3: Tx 5: GND

Figure 23	AS-F485
	3: D+ 4: D- 5: SG

2

Chapter 2 Extension Cables for I/O Modules

Table of Contents

2.1 DVP Series Slim PLCs 2-2

2.1.1 DVP32SM11N 2-2

2.1.2 DVP32SN11TN 2-2

2.2 AH500 Series 2-3

2.2.1 AH32AM10N-5B 2-3

2.2.2 AH32AM10N-5C 2-3

2.2.3 AH64AM10N-5C 2-4

2.2.4 AH32AN02T-5B 2-5

2.2.5 AH32AN02P-5B 2-5

2.2.6 AH32AN02T-5C 2-6

2.2.7 AH32AN02P-5C 2-6

2.2.8 AH64AN02T-5C 2-7

2.2.9 AH64AN02P-5C 2-8

2.2.10 AH20MC-5A 2-9

2.2.11 AH10EMC-5A/AH10DMC-5A/AH10CMC-5A/AH10PMC-5A 2-9

2.2.12 AH10PM-5A 2-10

2.2.13 AH15PM-5A 2-10

2.2.14 AH04HC-5A 2-11

2.2.15 AH500 Series Main Backplanes 2-12

2.3 AS300 Series 2-13

2.3.1 AS332T-A/AS332P-A/AS324MT-A 2-13

2.3.2 AS32AM10N-A 2-13

2.3.3 AS32AN02T-A 2-14

2.3.4 AS64AM10N-A 2-14

2.3.5 AS64AN02T-A 2-15

2.4 Cable Models 2-16

2.5 Descriptions of Cable Models 2-28

2.1 DVP Series Slim PLCs

2.1.1 DVP32SM11N

Input form	Direct current (sink or source)
Input current	24 V DC, 5 mA

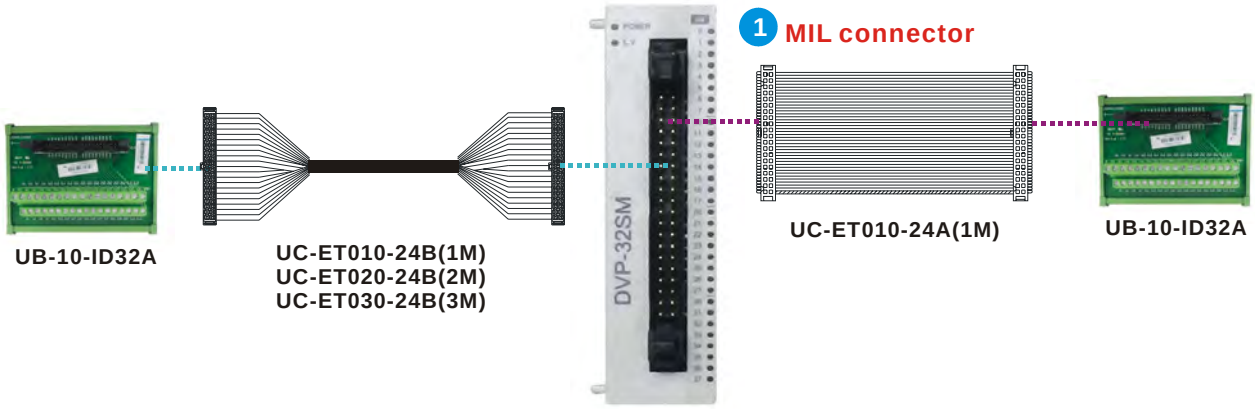

Note: Please refer to section 2.4 for more information about 1, 2, 3, etc.

2.1.2 DVP32SN11TN

Output point type	Transistor – T (sink)
Voltage specification	12~24 V DC, 0.1 A

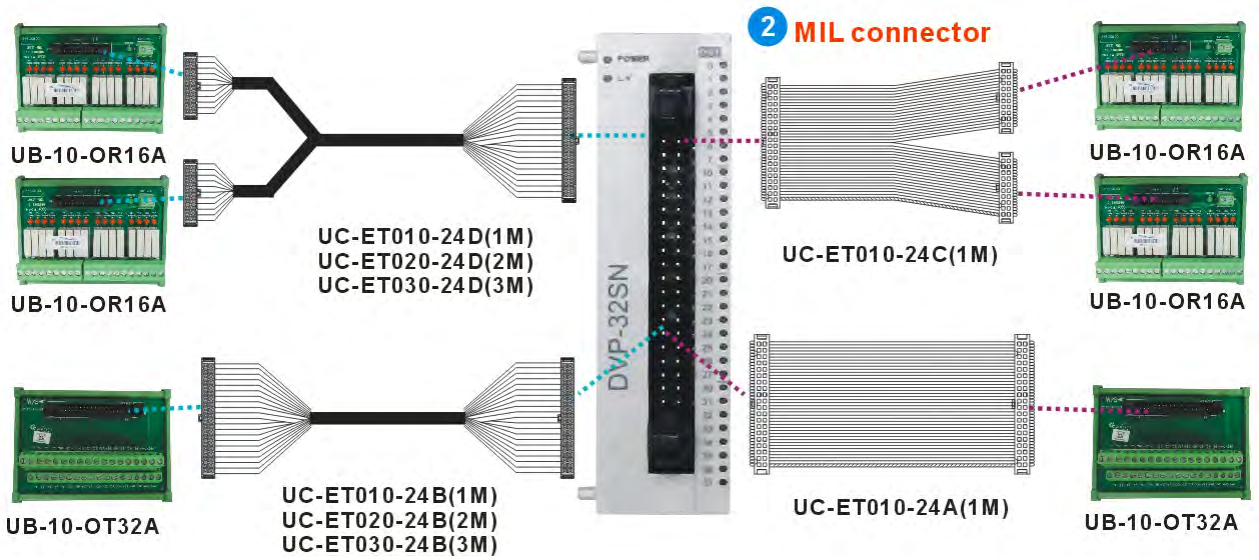

Note: Please refer to section 2.4 for more information about 1, 2, 3, etc.

2.2 AH500 Series

2.2.1 AH32AM10N-5B

Input form	Direct current (sink or source)
Input current	24 V DC, 5 mA

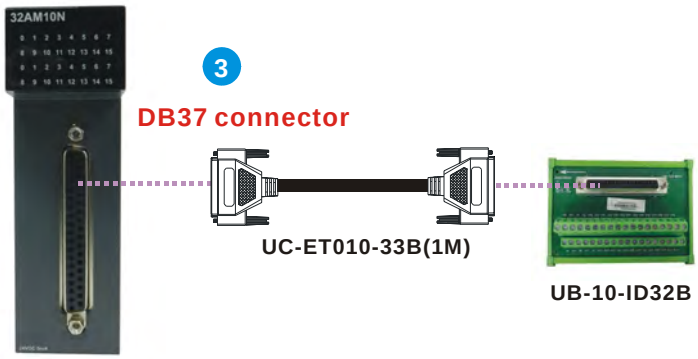

Note: Please refer to section 2.4 for more information about 1, 2, 3, etc.

2.2.2 AH32AM10N-5C

Input form	Direct current (sink or source)
Input current	24 V DC, 5 mA

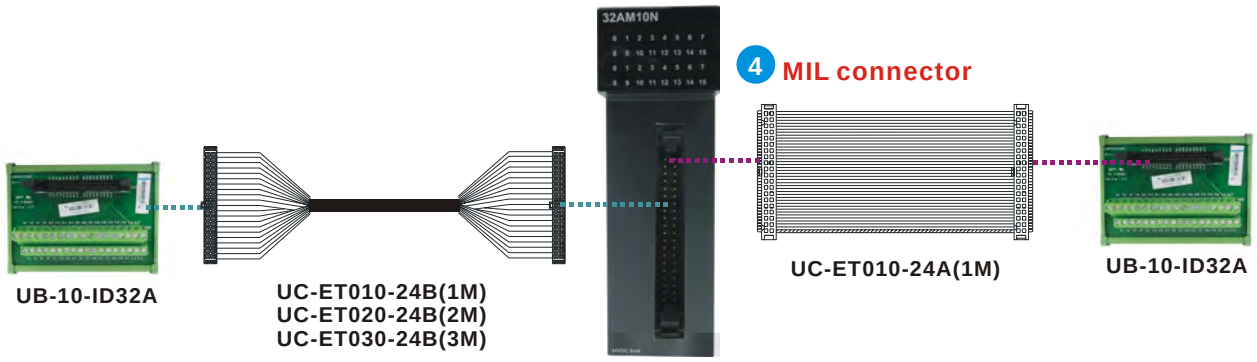

Note: Please refer to section 2.4 for more information about 1, 2, 3, etc.

2.2.3 AH64AM10N-5C

Input form	Direct current (sink or source)
Input current	24 V DC, 5 mA

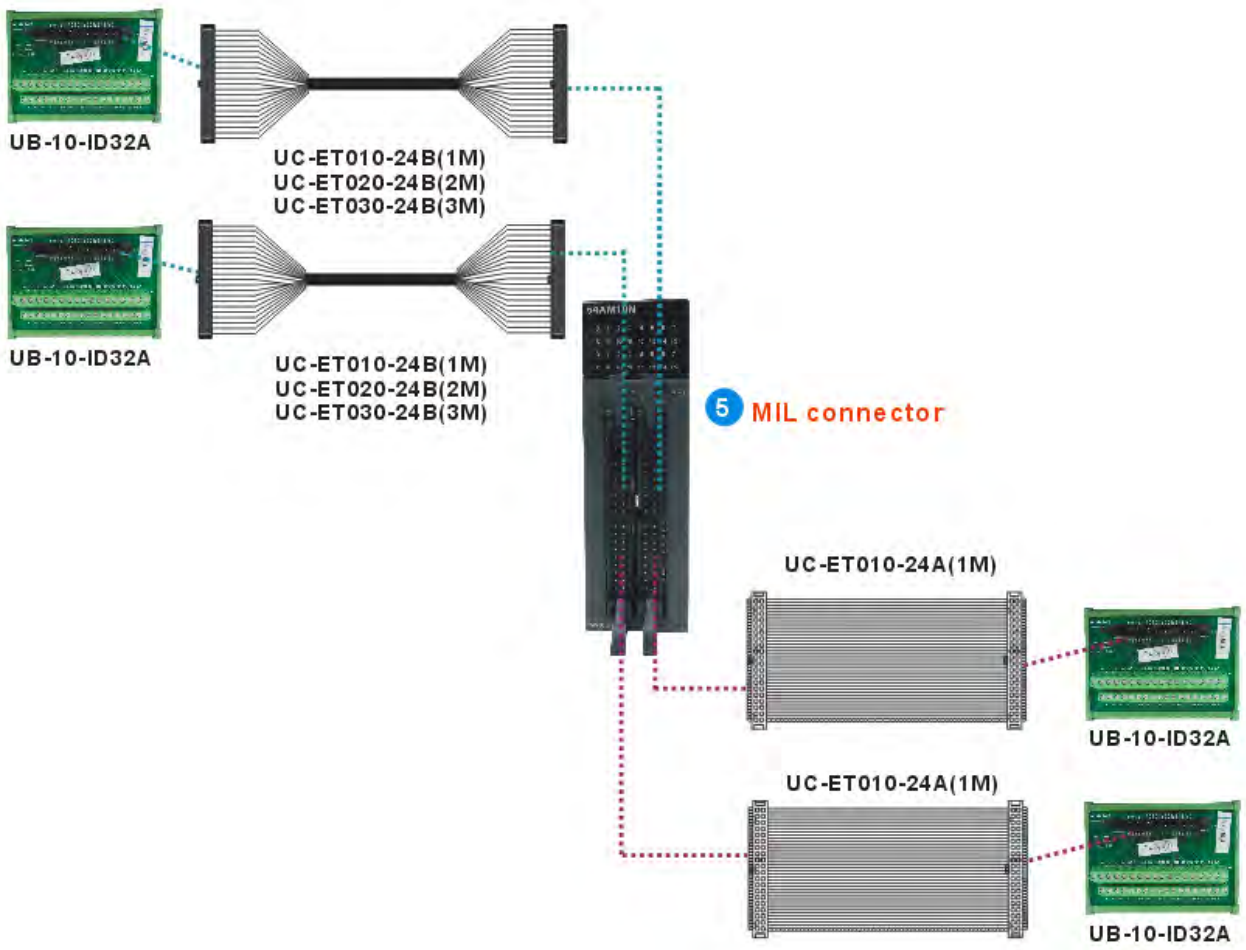

Note: Please refer to section 2.4 for more information about 1, 2, 3, etc.

2.2.4 AH32AN02T-5B

Output point type	Transistor – T (sink)
Voltage specification	12~24 V DC, 0.1 A

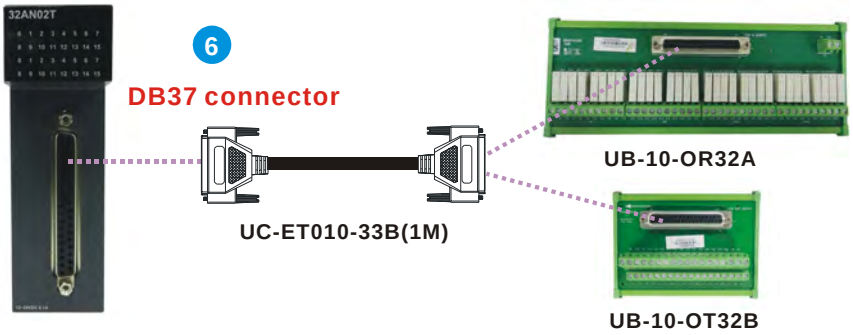

Note: Please refer to section 2.4 for more information about 1, 2, 3, etc.

2.2.5 AH32AN02P-5B

Output point type	Transistor – P (source)
Voltage specification	12~24 V DC, 0.1 A

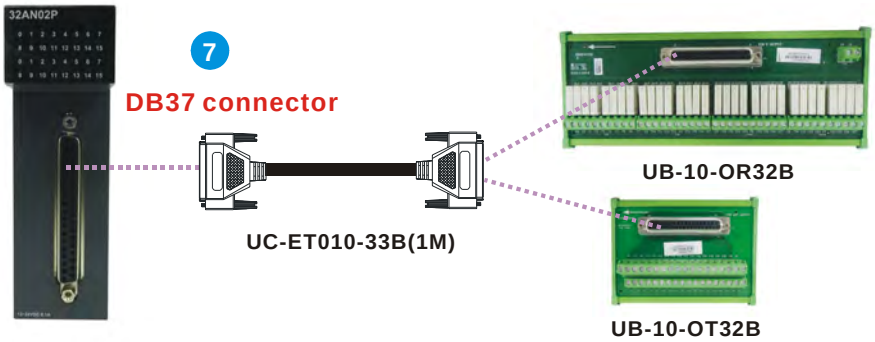

Note: Please refer to section 2.4 for more information about 1, 2, 3, etc.

2.2.6 AH32AN02T-5C

Output point type	Transistor – T (sink)
Voltage specification	12~24 V DC, 0.1 A

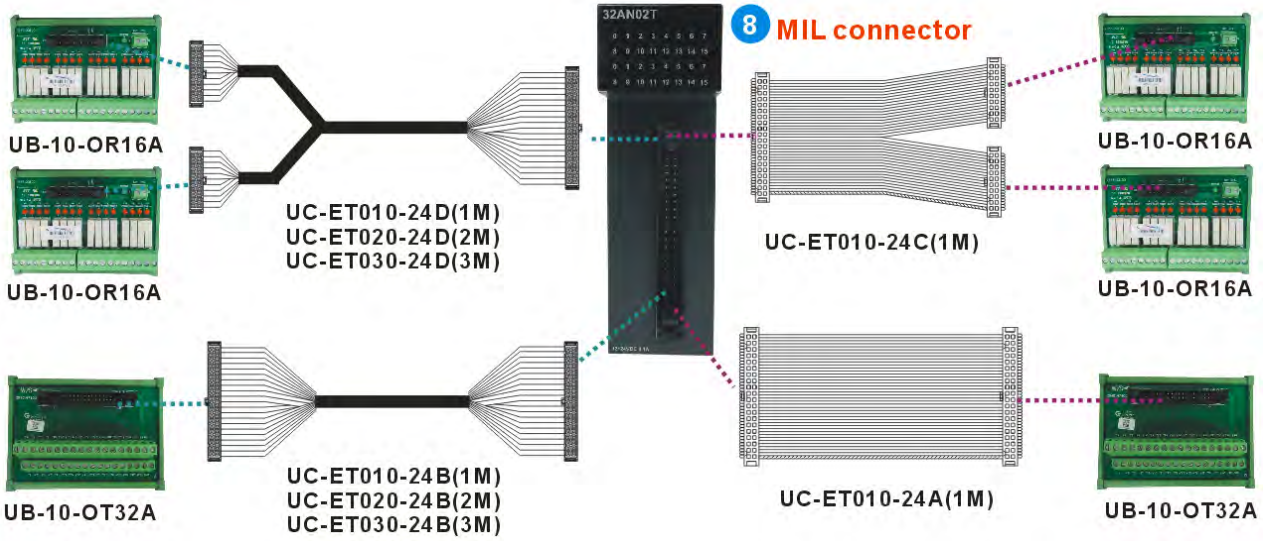

Note: Please refer to section 2.4 for more information about 1, 2, 3, etc.

2.2.7 AH32AN02P-5C

Output point type	Transistor – P (source)
Voltage specification	12~24 V DC, 0.1 A

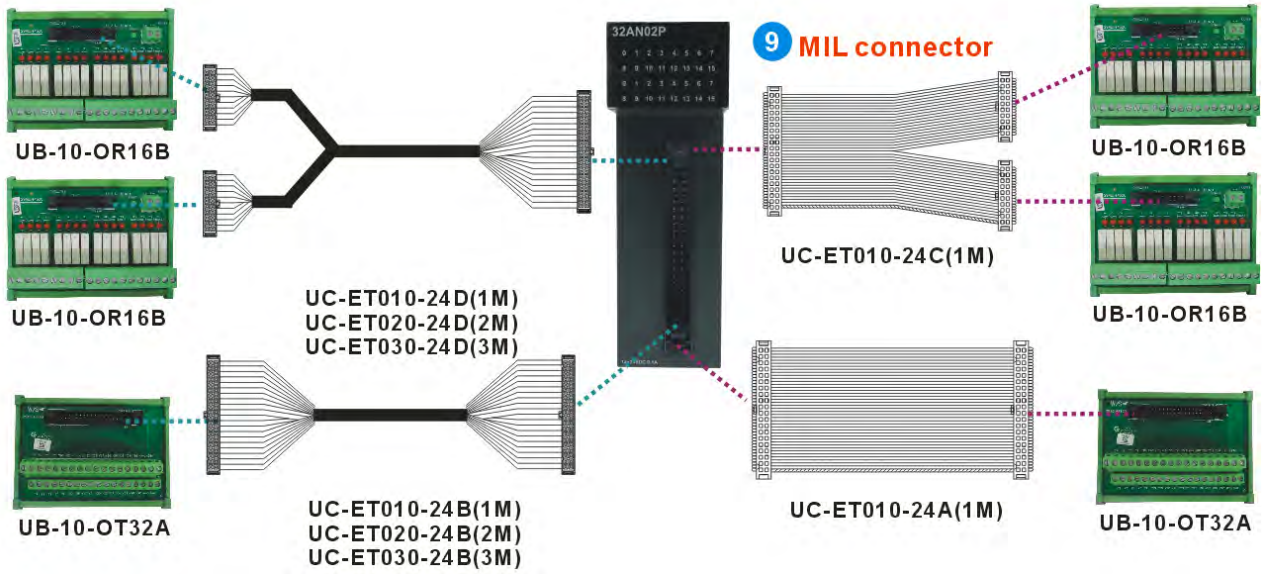

Note: Please refer to section 2.4 for more information about 1, 2, 3, etc.

2.2.8 AH64AN02T-5C

Output point type	Transistor – T (sink)
Voltage specification	12~24 V DC, 0.1 A

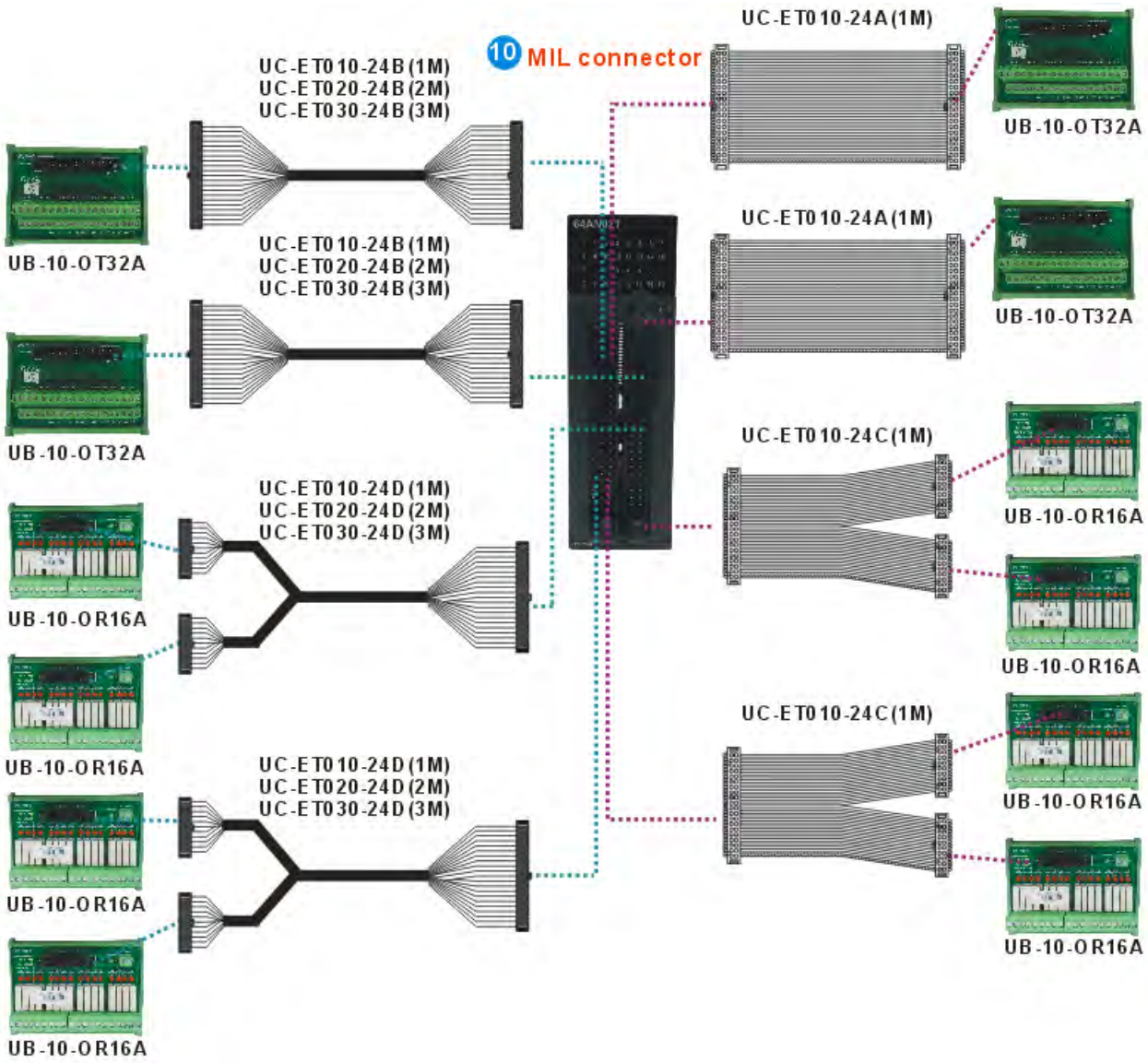

Note: Please refer to section 2.4 for more information about 1, 2, 3, etc.

2.2.9 AH64AN02P-5C

Output point type	Transistor – P (source)
Voltage specification	12~24 V DC, 0.1 A

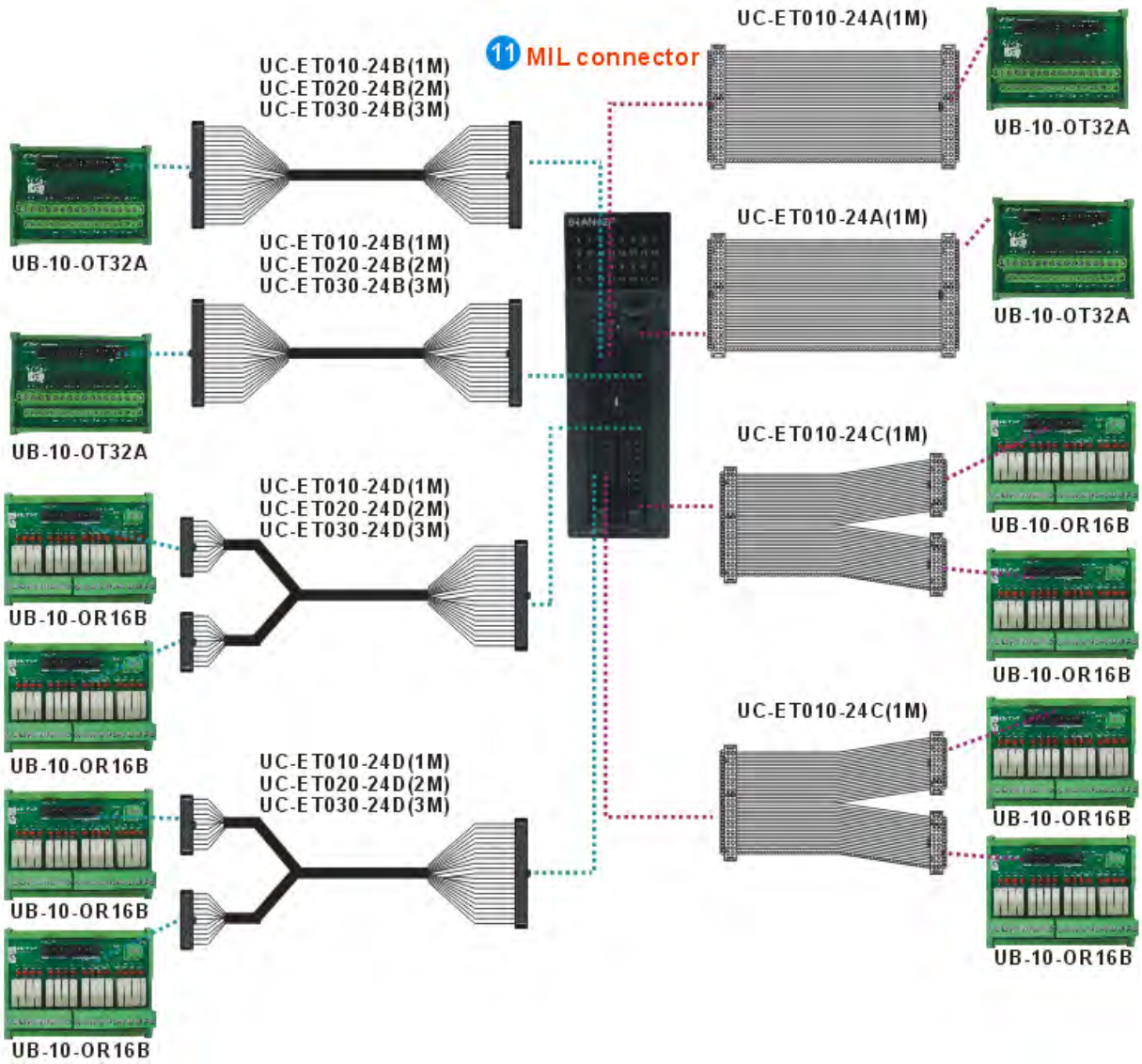

Note: Please refer to section 2.4 for more information about 1, 2, 3, etc.

2.2.10 AH20MC-5A

Input point type/Voltage specification/Frequency	Differential input/5~24 V DC, 15 mA/200 kHz
Output point type/Voltage specification/Frequency	Transistor output/5~30 V DC, 40 mA/200 kHz

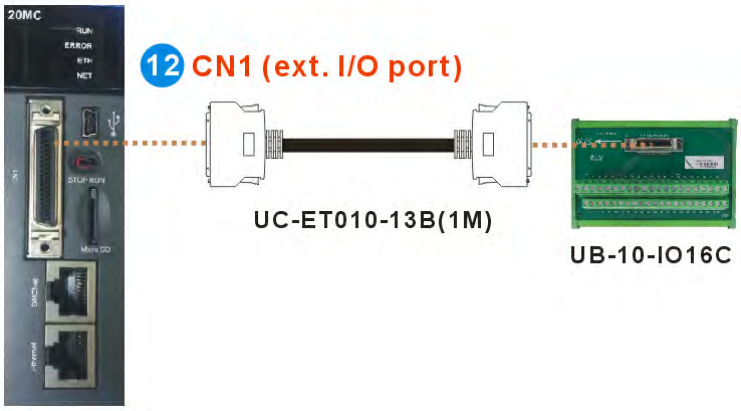

Note: Please refer to section 2.4 for more information about 1, 2, 3, etc.

2.2.11 AH10EMC-5A / AH10DMC-5A / AH10CMC-5A / AH10PMC-5A

Input point type/Voltage specification/Frequency	Differential input/5 V DC, 1.5 mA/1 MHz Open collector/24 V DC, 15 mA/100 kHz
Output point type/Voltage specification/Frequency	Transistor output/5~30 V DC, 40 mA/200 kHz

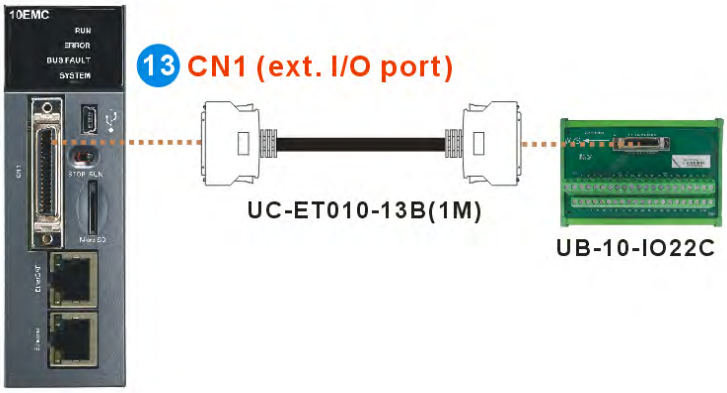

Note: Please refer to section 2.4 for more information about 1, 2, 3, etc.

2.2.12 AH10PM-5A

Input point type/Voltage specification/Frequency	Differential input/5~24 V DC, 15 mA/200 kHz Open collector/24 V DC, 15 mA/100 kHz
Output point type/Voltage specification/Frequency	Differential output/5 V DC, 40 mA/1 MHz Transistor output/5~30 V DC, 40 mA/200 kHz

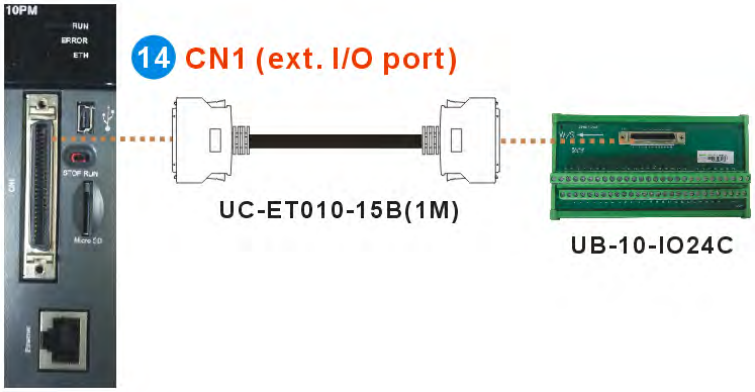

Note: Please refer to section 2.4 for more information about 1, 2, 3, etc.

2.2.13 AH15PM-5A

Input point type/Voltage specification/Frequency	Differential input/5~24 V DC, 15 mA/200 kHz Open collector/24 V DC, 15 mA/100 kHz
Output point type/Voltage specification/Frequency	Differential output/5 V DC, 40 mA/1 MHz Transistor output/5~30 V DC, 40 mA/200 kHz

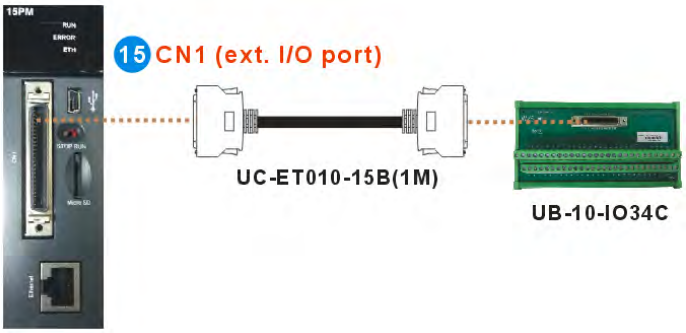

Note: Please refer to section 2.4 for more information about 1, 2, 3, etc.

2.2.14 AH04HC-5A

Input point type/Voltage specification/Frequency	Differential input/5~24 V DC, 15 mA/200 kHz
Output point type/Voltage specification/Frequency	Transistor output/5~30 V DC, 40 mA/200 kHz

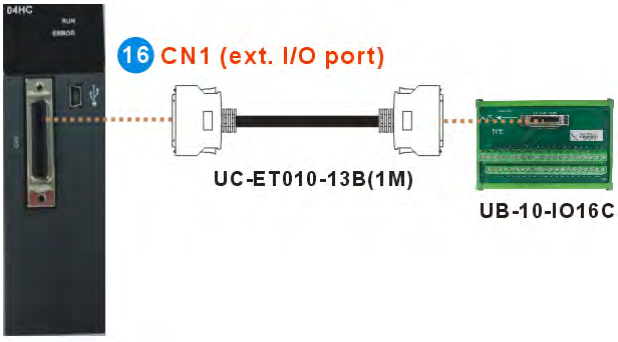

Note: Please refer to section 2.4 for more information about 1, 2, 3, etc.

2.2.15 AH500 Series Main Backplanes

AH500 series main backplanes (AHBP04M1-5A, AHBP08M1-5A, AHBP12M1-5A)

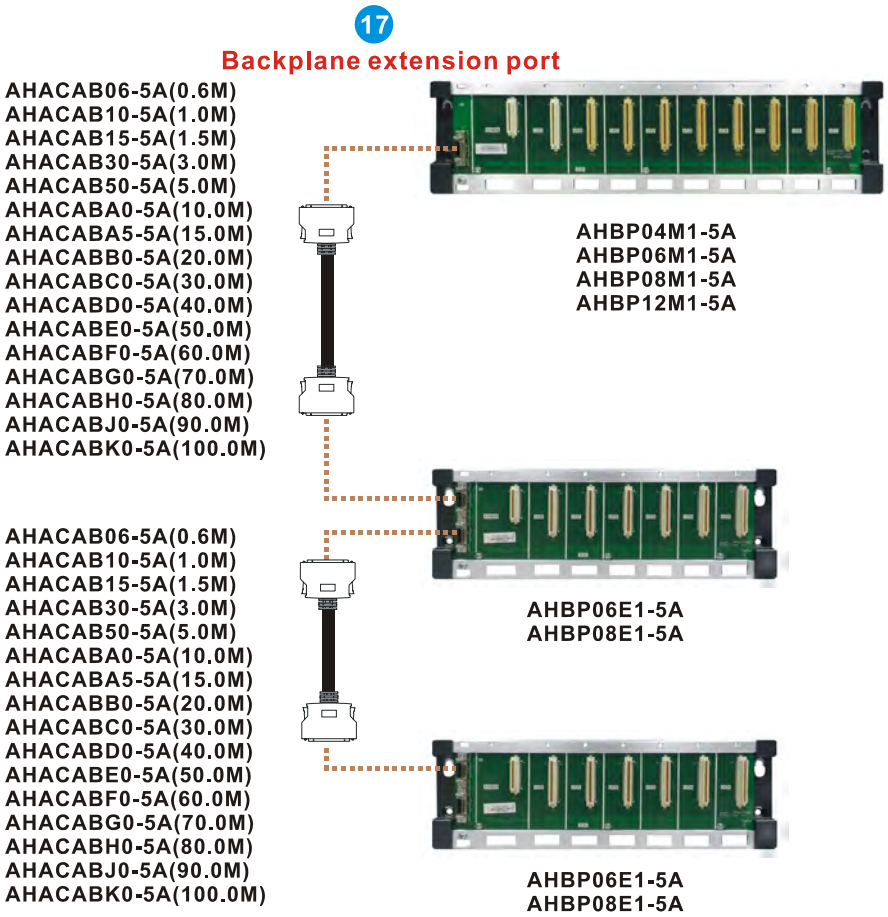

Note: Please refer to section 2.4 for more information about 1, 2, 3, etc.

2.3 AS300 Series

2.3.1 AS332T-A / AS332P-A / AS324MT-A

Input form	Direct current (sink or source)
Input current	24 V DC, 5 mA

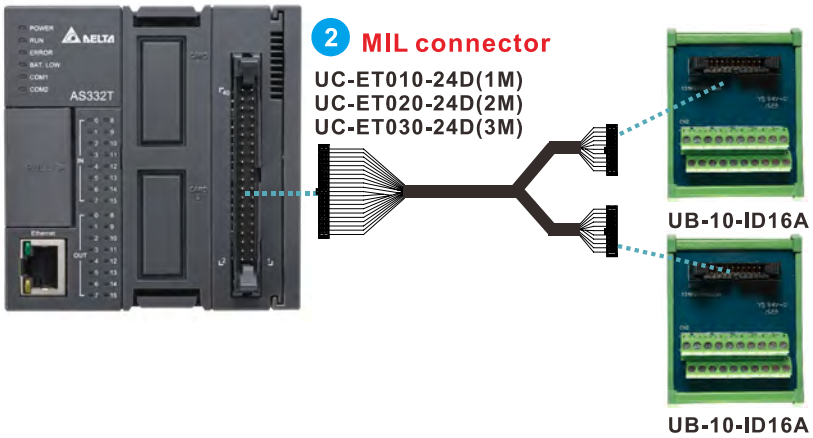

Note: Please refer to section 2.4 for more information about 1, 2, 3, etc.

2.3.2 AS32AM10N-A

Input form	Direct current (sink or source)
Input current	24 V DC, 5 mA

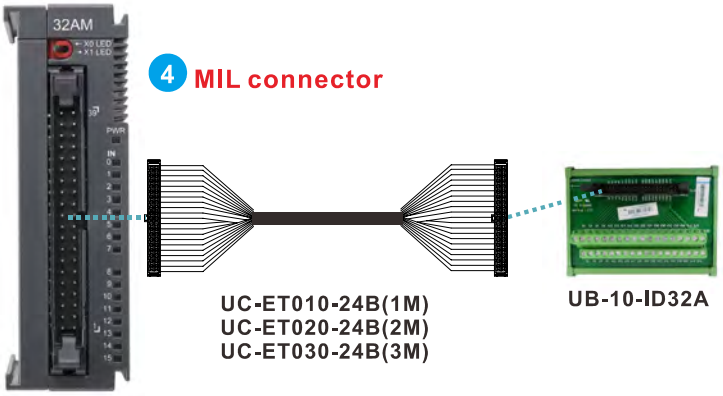

Note: Please refer to section 2.4 for more information about 1, 2, 3, etc.

2.3.3 AS32AN02T-A

Output point type	Transistor – T (sink)
Voltage specification	12~24 V DC, 0.1 A

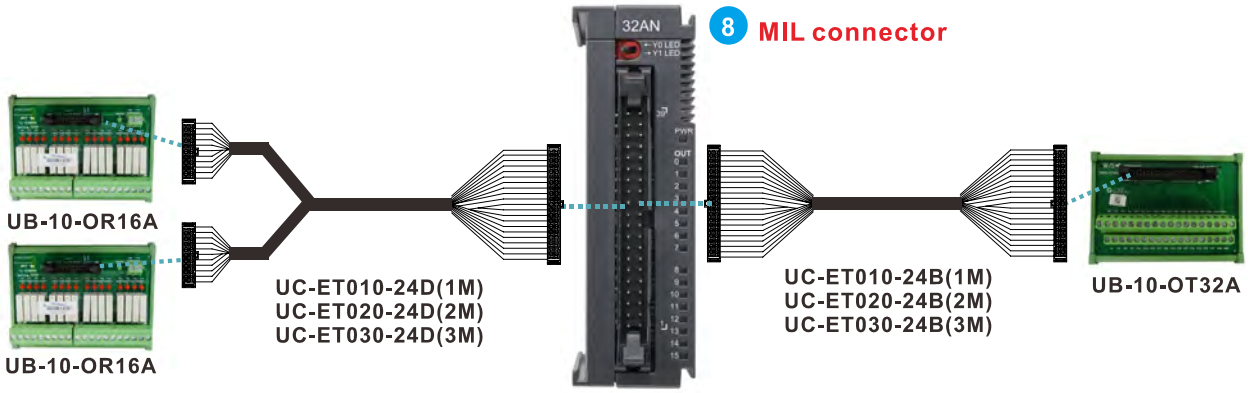

Note: Please refer to section 2.4 for more information about 1, 2, 3, etc.

2.3.4 AS64AM10N-A

Input form	Direct current (sink or source)
Input current	24 V DC, 5 mA

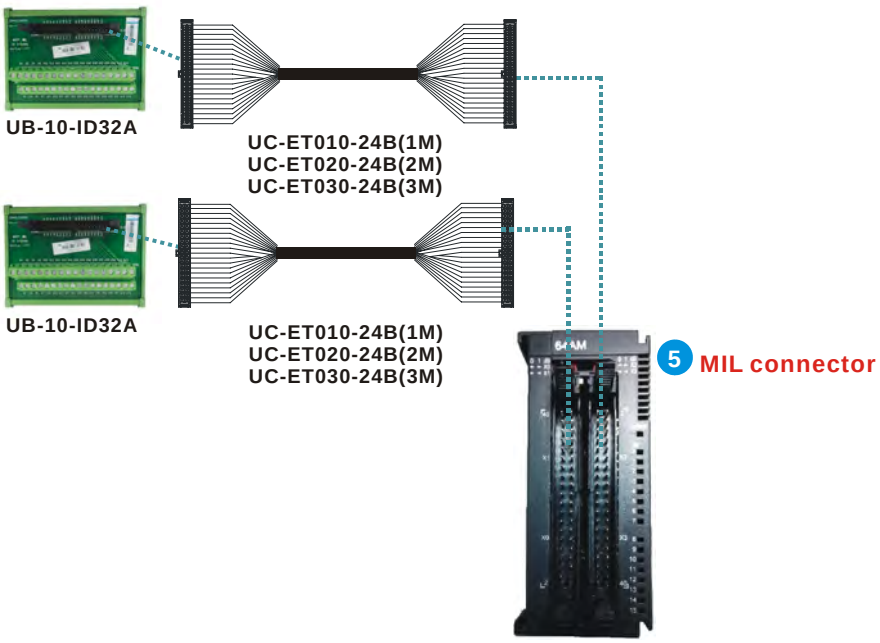

Note: Please refer to section 2.4 for more information about 1, 2, 3, etc.

2.3.5 AS64AN02T-A

Output point type	Transistor – T (sink)
Voltage specification	12~24 V DC, 0.1 A

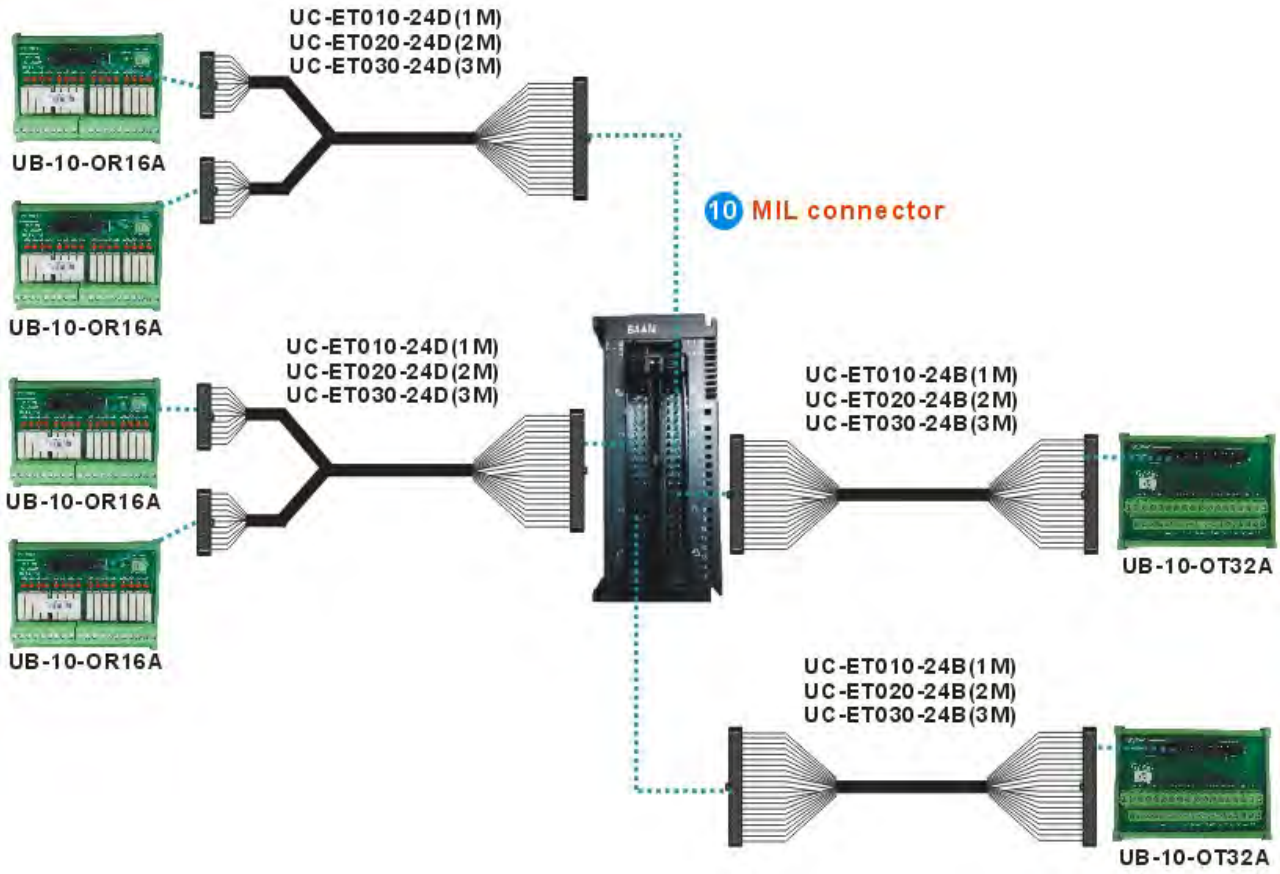

Note: Please refer to section 2.4 for more information about 1, 2, 3, etc.

2.4 Cable Models

1 MIL connector

CPU	Adapter	Module/Interface card	Cable	External terminal module
--	--	DVP32SM11N	IDC 40↔ IDC 40	UB-10-ID32A (Figure 2)
			UC-ET010-24A (1 m) (Figure 1A) UC-ET010-24B (1 m) (Figure 1B) UC-ET020-24B (2 m) (Figure 1B) UC-ET030-24B (3 m) (Figure 1B)	

2 MIL connector

CPU	Adapter	Module/Interface card	Cable	External terminal module
--	--	DVP32SN11TN	IDC 40↔ IDC 40	UB-10-OT32A (Figure 3)
			UC-ET010-24A (1 m) (Figure 1A) UC-ET010-24B (1 m) (Figure 1B) UC-ET020-24B (2 m) (Figure 1B) UC-ET030-24B (3 m) (Figure 1B)	

CPU	Adapter	Module/Interface card	Cable	External terminal module
--	--	DVP32SN11TN	IDC 40↔ IDC 20x2	UB-10-OR16A (Figure 5)
			UC-ET010-24C (1 m) (Figure 4A) UC-ET010-24D (1 m) (Figure 4B) UC-ET020-24D (2 m) (Figure 4B) UC-ET030-24D (3 m) (Figure 4B)	

CPU	Adapter	Module/Interface card	Cable	External terminal module
AS300	--	--	IDC 40↔ IDC 20x2	UB-10-ID16A (Figure 19)
			UC-ET010-24D (1 m) (Figure 4B) UC-ET020-24D (2 m) (Figure 4B) UC-ET030-24D (3 m) (Figure 4B)	

3 DB37 connector

CPU	Adapter	Module/Interface card	Cable	External terminal module
--	--	AH32AM10N-5B	Male DB37 connector ↔ Male DB37 connector	UB-10-ID32B (Figure 7)
			UC-ET010-33B (1 m) (Figure 6)	

4 MIL connector

CPU	Adapter	Module/Interface card	Cable	External terminal module
--	--	AH32AM10N-5C	IDC 40↔ IDC 40	UB-10-ID32A (Figure 2)
			UC-ET010-24A (1 m) (Figure 1A) UC-ET010-24B (1 m) (Figure 1B) UC-ET020-24B (2 m) (Figure 1B) UC-ET030-24B (3 m) (Figure 1B)	

CPU	Adapter	Module/Interface card	Cable	External terminal module
--	--	AS32AM10N-A	IDC 40↔ IDC 40	UB-10-ID32A (Figure 2)
			UC-ET010-24B (1 m) (Figure 1B) UC-ET020-24B (2 m) (Figure 1B) UC-ET030-24B (3 m) (Figure 1B)	

5 MIL connector

CPU	Adapter	Module/Interface card	Cable	External terminal module
--	--	AH64AM10N-5C	IDC 40↔ IDC 40	UB-10-ID32A (Figure 2)
			UC-ET010-24A (1 m) (Figure 1A) UC-ET010-24B (1 m) (Figure 1B) UC-ET020-24B (2 m) (Figure 1B) UC-ET030-24B (3 m) (Figure 1B)	

CPU	Adapter	Module/Interface card	Cable	External terminal module
--	--	AS64AM10N-A	IDC 40↔ IDC 40	UB-10-ID32A (Figure 2)
			UC-ET010-24B (1 m) (Figure 1B) UC-ET020-24B (2 m) (Figure 1B) UC-ET030-24B (3 m) (Figure 1B)	

6 DB37 connector

CPU	Adapter	Module/Interface card	Cable	External terminal module
--	--	AH32AN02T-5B	Male DB37 connector ↔ Male DB37 connector	UB-10-OR32A (Figure 8) UB-10-OT32B (Figure 9)
			UC-ET010-33B (1 m) (Figure 6)	

7 DB37 connector

CPU	Adapter	Module/Interface card	Cable	External terminal module
--	--	AH32AN02P-5B	Male DB37 connector ↔ Male DB37 connector	UB-10-OR32B (Figure 10) UB-10-OT32B (Figure 9)
			UC-ET010-33B (1 m) (Figure 6)	

8 MIL connector

CPU	Adapter	Module/Interface card	Cable	External terminal module
--	--	AH32AN02T-5C	IDC 40 ↔ IDC 40	UB-10-OT32A (Figure 3)
			UC-ET010-24A (1 m) (Figure 1A) UC-ET010-24B (1 m) (Figure 1B) UC-ET020-24B (2 m) (Figure 1B) UC-ET030-24B (3 m) (Figure 1B)	

CPU	Adapter	Module/Interface card	Cable	External terminal module
--	--	AH32AN02T-5C	IDC 40 ↔ IDC 20x2	UB-10-OR16A (Figure 5)
			UC-ET010-24C (1 m) (Figure 4A) UC-ET010-24D (1 m) (Figure 4B) UC-ET020-24D (2 m) (Figure 4B) UC-ET030-24D (3 m) (Figure 4B)	

CPU	Adapter	Module/Interface card	Cable	External terminal module
--	--	AS32AN02T-A	IDC 40 ↔ IDC 40	UB-10-OT32A (Figure 3)
			UC-ET010-24B (1 m) (Figure 1B) UC-ET020-24B (2 m) (Figure 1B) UC-ET030-24B (3 m) (Figure 1B)	

CPU	Adapter	Module/Interface card	Cable	External terminal module
--	--	AS32AN02T-A	IDC 40 ↔ IDC 20x2	UB-10-OR16A (Figure 5)
			UC-ET010-24B (1 m) (Figure 1B) UC-ET020-24B (2 m) (Figure 1B) UC-ET030-24B (3 m) (Figure 1B)	

9 MIL connector

CPU	Adapter	Module/Interface card	Cable	External terminal module
--	--	AH32AN02P-5C	IDC 40 ↔ IDC 40	UB-10-OT32A (Figure 3)
			UC-ET010-24A (1 m) (Figure 1A) UC-ET010-24B (1 m) (Figure 1B) UC-ET020-24B (2 m) (Figure 1B) UC-ET030-24B (3 m) (Figure 1B)	

CPU	Adapter	Module/Interface card	Cable	External terminal module
--	--	AH32AN02P-5C	IDC 40 ↔ IDC 20x2	UB-10-OR16B (Figure 11)
			UC-ET010-24C (1 m) (Figure 4A) UC-ET010-24D (1 m) (Figure 4B) UC-ET020-24D (2 m) (Figure 4B) UC-ET030-24D (3 m) (Figure 4B)	

10 MIL connector

CPU	Adapter	Module/Interface card	Cable	External terminal module
--	--	AH64AN02T-5C	IDC 40 ↔ IDC 40	UB-10-OT32A (Figure 3)
			UC-ET010-24A (1 m) (Figure 1A) UC-ET010-24B (1 m) (Figure 1B) UC-ET020-24B (2 m) (Figure 1B) UC-ET030-24B (3 m) (Figure 1B)	

CPU	Adapter	Module/Interface card	Cable	External terminal module
--	--	AH64AN02T-5C	IDC 40 ↔ IDC 20x2	UB-10-OR16A (Figure 5)
			UC-ET010-24C (1 m) (Figure 4A) UC-ET010-24D (1 m) (Figure 4B) UC-ET020-24D (2 m) (Figure 4B) UC-ET030-24D (3 m) (Figure 4B)	

CPU	Adapter	Module/Interface card	Cable	External terminal module
--	--	AS64AN02T-A	IDC 40 ↔ IDC 40	UB-10-OT32A (Figure 3)
			UC-ET010-24B (1 m) (Figure 1B) UC-ET020-24B (2 m) (Figure 1B) UC-ET030-24B (3 m) (Figure 1B)	

CPU	Adapter	Module/Interface card	Cable	External terminal module
--	--	AS64AN02T-A	IDC 40 ↔ IDC 20x2	UB-10-OR16A (Figure 5)
			UC-ET010-24D (1 m) (Figure 4B) UC-ET020-24D (2 m) (Figure 4B) UC-ET030-24D (3 m) (Figure 4B)	

11 MIL connector

CPU	Adapter	Module/Interface card	Cable	External terminal module
--	--	AH64AN02P-5C	IDC 40 ↔ IDC 40	UB-10-OT32A (Figure 3)
			UC-ET010-24A (1 m) (Figure 1A) UC-ET010-24B (1 m) (Figure 1B) UC-ET020-24B (2 m) (Figure 1B) UC-ET030-24B (3 m) (Figure 1B)	

CPU	Adapter	Module/Interface card	Cable	External terminal module
--	--	AH64AN02P-5C	IDC 40 ↔ IDC 20x2	UB-10-OR16B (Figure 11)
			UC-ET010-24C (1 m) (Figure 4A) UC-ET010-24D (1 m) (Figure 4B) UC-ET020-24D (2 m) (Figure 4B) UC-ET030-24D (3 m) (Figure 4B)	

12 CN1 (ext. I/O port)

CPU	Adapter	Module/Interface card	Cable	External terminal module
--	--	AH20MC-5A	Female MDR36 connector ↔ Female MDR36 connector	UB-10-IO16C (Figure 13)
			UC-ET010-13B (1 m) (Figure 12)	

13 CN1 (ext. I/O port)

CPU	Adapter	Module/Interface card	Cable	External terminal module
AH10EMC-5A	--	--	Female MDR36 connector ↔ Female MDR36 connector	UB-10-IO22C (Figure 14)
			UC-ET010-13B (1 m) (Figure 12)	

14 CN1 (ext. I/O port)

CPU	Adapter	Module/Interface card	Cable	External terminal module
--	--	AH10PM-5A	Female MDR50 connector ↔ Female MDR50 connector	UB-10-IO24C (Figure 16)
			UC-ET010-15B (1 m) (Figure 15)	

15 CN1 (ext. I/O port)

CPU	Adapter	Module/Interface card	Cable	External terminal module
--	--	AH15PM-5A	Female MDR50 connector ↔ Female MDR50 connector	UB-10-IO34C (Figure 17)
			UC-ET010-15B (1 m) (Figure 15)	

16 CN1 (ext. I/O port)

CPU	Adapter	Module/Interface card	Cable	External terminal module
--	--	AH04HC-5A	Female MDR36 connector ↔ Female MDR36 connector	UB-10-IO16C (Figure 13)
			UC-ET010-13B (1 m) (Figure 12)	

17 Backplane extension port

CPU	Adapter	Module/Interface card	Cable	External terminal module
--	--	AHBP04M1-5A AHBP06M1-5A AHBP08M1-5A AHBP12M1-5A	Male MDR20 connector ↔ Male MDR20 connector	AHBP06E1-5A AHBP08E1-5A
			AHACAB06-5A (0.6 m) (Figure 18) AHACAB10-5A (1 m) (Figure 18) AHACAB15-5A (1.5 m) (Figure 18) AHACAB30-5A (3 m) (Figure 18) AHACAB50-5A (5 m) (Figure 18) AHACABA0-5A (10 m) (Figure 18) AHACABA5-5A (15 m) (Figure 18) AHACABB0-5A (20 m) (Figure 18) AHACABC0-5A (30 m) (Figure 18) AHACABD0-5A (40 m) (Figure 18) AHACABE0-5A (50 m) (Figure 18) AHACABF0-5A (60 m) (Figure 18) AHACABG0-5A (70 m) (Figure 18) AHACABH0-5A (80 m) (Figure 18) AHACABJ0-5A (90 m) (Figure 18) AHACABK0-5A (100 m) (Figure 18)	

2.5 Descriptions of Cable Models

Figure 1A	UC-ET010-24A (1 m)	IDC 40 ↔ IDC 40

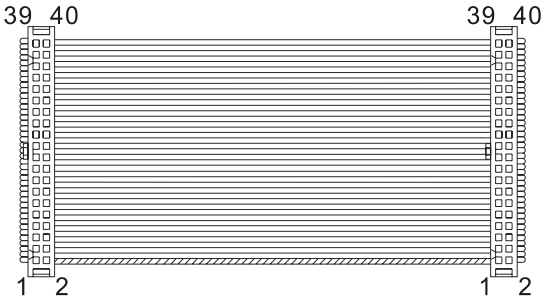

Figure 1B	UC-ET010-24B (1 m) UC-ET020-24B (2 m) UC-ET030-24B (3 m)	IDC 40 ↔ IDC 40 (shield)

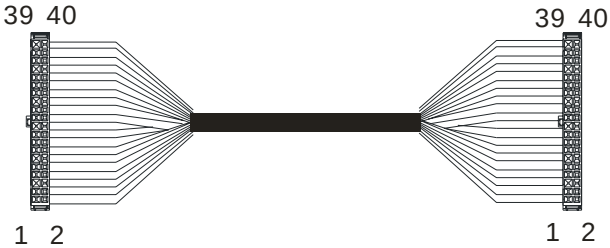

AH32AM10N-5C

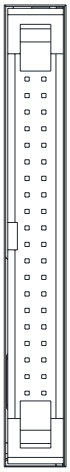

X0.0	X0.1
X0.2	X0.3
X0.4	X0.5
X0.6	X0.7
X0.8	X0.9
X0.10	X0.11
X0.12	X0.13
X0.14	X0.15
S/S	S/S
X1.0	X1.1
X1.2	X1.3
X1.4	X1.5
X1.6	X1.7
X1.8	X1.9
X1.10	X1.11
X1.12	X1.13
X1.14	X1.15
S/S	S/S

AH64AM10N-5C

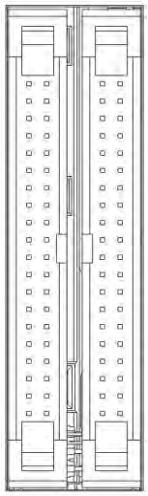

		X2.0	X2.1
S/S	S/S	X2.2	X2.3
X1.15	X1.14	X2.4	X2.5
X1.13	X1.12	X2.6	X2.7
X1.11	X1.10	X2.8	X2.9
X1.9	X1.8	X2.10	X2.11
X1.7	X1.6	X2.12	X2.13
X1.5	X1.4	X2.14	X2.15
X1.3	X1.2	S/S	S/S
X1.1	X1.0		
		X3.0	X3.1
S/S	S/S	X3.2	X3.3
X0.15	X0.14	X3.4	X3.5
X0.13	X0.12	X3.6	X3.7
X0.11	X0.10	X3.8	X3.9
X0.9	X0.8	X3.10	X3.11
X0.7	X0.6	X3.12	X3.13
X0.5	X0.4	X3.14	X3.15
X0.3	X0.2	S/S	S/S
X0.1	X0.0		

AH32AN02T-5C/AH32AN02P-5C

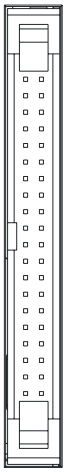

Y0.0	Y0.1
Y0.2	Y0.3
Y0.4	Y0.5
Y0.6	Y0.7
Y0.8	Y0.9
Y0.10	Y0.11
Y0.12	Y0.13
Y0.14	Y0.15
ZP	ZP
UP	UP
Y1.0	Y1.1
Y1.2	Y1.3
Y1.4	Y1.5
Y1.6	Y1.7
Y1.8	Y1.9
Y1.10	Y1.11
Y1.12	Y1.13
Y1.14	Y1.15
ZP	ZP
UP	UP

AH64AN02T-5C/AH64AN02P-5C

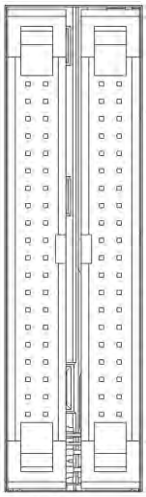

UP	UP	Y2.0	Y2.1
ZP	ZP	Y2.2	Y2.3
Y1.15	Y1.14	Y2.4	Y2.5
Y1.13	Y1.12	Y2.6	Y2.7
Y1.11	Y1.10	Y2.8	Y2.9
Y1.9	Y1.8	Y2.10	Y2.11
Y1.7	Y1.6	Y2.12	Y2.13
Y1.5	Y1.4	Y2.14	Y2.15
Y1.3	Y1.2	ZP	ZP
Y1.1	Y1.0	UP	UP
UP	UP	Y3.0	Y3.1
ZP	ZP	Y3.2	Y3.3
Y0.15	Y0.14	Y3.4	Y3.5
Y0.13	Y0.12	Y3.6	Y3.7
Y0.11	Y0.10	Y3.8	Y3.9
Y0.9	Y0.8	Y3.10	Y3.11
Y0.7	Y0.6	Y3.12	Y3.13
Y0.5	Y0.4	Y3.14	Y3.15
Y0.3	Y0.2	ZP	ZP
Y0.1	Y0.0	UP	UP

DVP32SM11N

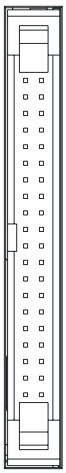

X0	X1
X2	X3
X4	X5
X6	X7
X10	X11
X12	X13
X14	X15
X16	X17
S/S	S/S
X20	X21
X22	X23
X24	X25
X26	X27
X30	X31
X32	X33
X34	X35
X36	X37
S/S	S/S

DVP32SN11TN

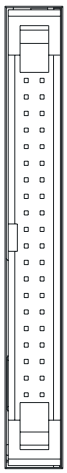

Y0	Y1
Y2	Y3
Y4	Y5
Y6	Y7
Y10	Y11
Y12	Y13
Y14	Y15
Y16	Y17
S/S	S/S
Y20	Y21
Y22	Y23
Y24	Y25
Y26	Y27
Y30	Y31
Y32	Y33
Y34	Y35
Y36	Y37
S/S	S/S

AS32AM10N-A

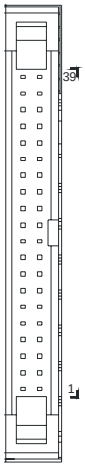

S/S	S/S
X1.15	X1.14
X1.13	X1.12
X1.11	X1.10
X1.9	X1.8
X1.7	X1.6
X1.5	X1.4
X1.3	X1.2
X1.1	X1.0
S/S	S/S
X0.15	X0.14
X0.13	X0.12
X0.11	X0.10
X0.9	X0.8
X0.7	X0.6
X0.5	X0.4
X0.3	X0.2
X0.1	X0.0

AS32AN02T-A

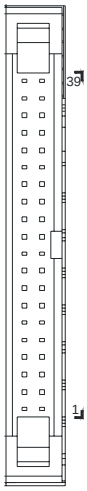

C0	C0
Y1.15	Y1.14
Y1.13	Y1.12
Y1.11	Y1.10
Y1.9	Y1.8
Y1.7	Y1.6
Y1.5	Y1.4
Y1.3	Y1.2
Y1.1	Y1.0
C0	C0
Y0.15	Y0.14
Y0.13	Y0.12
Y0.11	Y0.10
Y0.9	Y0.8
Y0.7	Y0.6
Y0.5	Y0.4
Y0.3	Y0.2
Y0.1	Y0.0

AS64AM10N-A

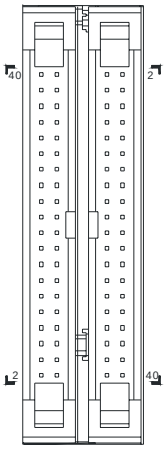

-	-	X2.0	X2.1
S/S	S/S	X2.2	X2.3
X1.15	X1.14	X2.4	X2.5
X1.13	X1.12	X2.6	X2.7
X1.11	X1.10	X2.8	X2.9
X1.9	X1.8	X2.10	X2.11
X1.7	X1.6	X2.12	X2.13
X1.5	X1.4	X2.14	X2.15
X1.3	X1.2	S/S	S/S
X1.1	X1.0	-	-
-	-	X3.0	X3.1
S/S	S/S	X3.2	X3.3
X0.15	X0.14	X3.4	X3.5
X0.13	X0.12	X3.6	X3.7
X0.11	X0.10	X3.8	X3.9
X0.9	X0.8	X3.10	X3.11
X0.7	X0.6	X3.12	X3.13
X0.5	X0.4	X3.14	X3.15
X0.3	X0.2	S/S	S/S
X0.1	X0.0	-	-

AS64AN02T-A

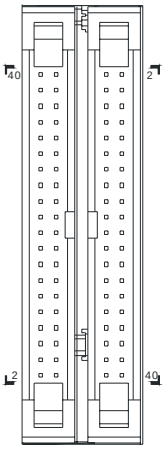

-	-	Y2.0	Y2.1
C0	C0	Y2.2	Y2.3
Y1.15	Y1.14	Y2.4	Y2.5
Y1.13	Y1.12	Y2.6	Y2.7
Y1.11	Y1.10	Y2.8	Y2.9
Y1.9	Y1.8	Y2.10	Y2.11
Y1.7	Y1.6	Y2.12	Y2.13
Y1.5	Y1.4	Y2.14	Y2.15
Y1.3	Y1.2	C1	C1
Y1.1	Y1.0	-	-
-	-	Y3.0	Y3.1
C0	C0	Y3.2	Y3.3
Y0.15	Y0.14	Y3.4	Y3.5
Y0.13	Y0.12	Y3.6	Y3.7
Y0.11	Y0.10	Y3.8	Y3.9
Y0.9	Y0.8	Y3.10	Y3.11
Y0.7	Y0.6	Y3.12	Y3.13
Y0.5	Y0.4	Y3.14	Y3.15
Y0.3	Y0.2	C1	C1
Y0.1	Y0.0	-	-

Figure 2	UB-10-ID32A

↑	X0	X2	X4	X6	X10	X12	X14	X16	X20	X22	X24	X26	X30	X32	X34	X36	S/S	S/S
↓	X1	X3	X5	X7	X11	X13	X15	X17	X21	X23	X25	X27	X31	X33	X35	X37	S/S	S/S

Figure 3	UB-10-OT32A

↑	Y0	Y2	Y4	Y6	Y10	Y12	Y14	Y16	Y20	Y22	Y24	Y26	Y30	Y32	Y34	Y36	+24V	+24V
↓	Y1	Y3	Y5	Y7	Y11	Y13	Y15	Y17	Y21	Y23	Y25	Y27	Y31	Y33	Y35	Y37	GND	GND

Figure 4A	UC-ET010-24C (1 m)	IDC 40 ↔ IDC 20x2

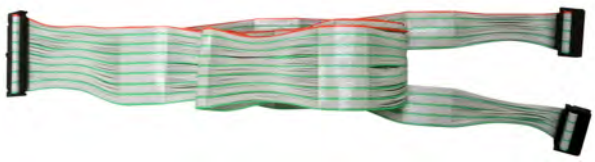

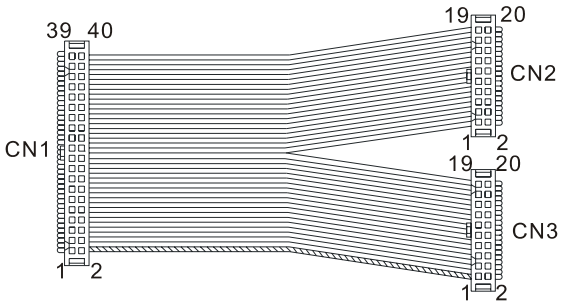

Figure 4B	UC-ET010-24D (1 m) UC-ET020-24D (2 m) UC-ET030-24D (3 m)	IDC 40 ↔ IDC 20x2 (shield)

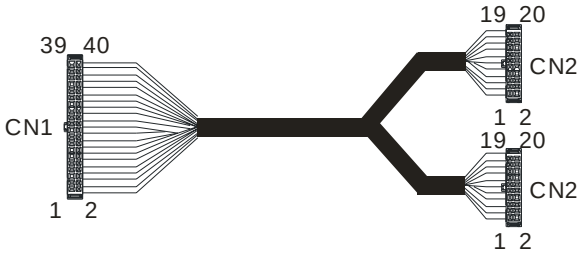

AH32AN02T-5C/AH32AN02P-5C

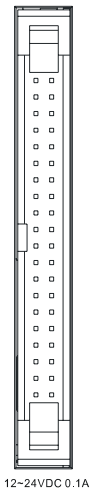

Y0.0	Y0.1
Y0.2	Y0.3
Y0.4	Y0.5
Y0.6	Y0.7
Y0.8	Y0.9
Y0.10	Y0.11
Y0.12	Y0.13
Y0.14	Y0.15
ZP	ZP
UP	UP
Y1.0	Y1.1
Y1.2	Y1.3
Y1.4	Y1.5
Y1.6	Y1.7
Y1.8	Y1.9
Y1.10	Y1.11
Y1.12	Y1.13
Y1.14	Y1.15
ZP	ZP
UP	UP

AH64AN02T-5C/AH64AN02P-5C

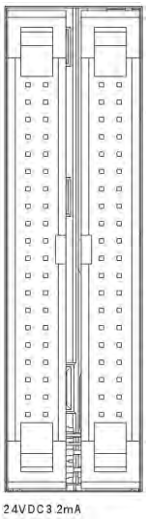

UP	UP	Y2.0	Y2.1
ZP	ZP	Y2.2	Y2.3
Y1.15	Y1.14	Y2.4	Y2.5
Y1.13	Y1.12	Y2.6	Y2.7
Y1.11	Y1.10	Y2.8	Y2.9
Y1.9	Y1.8	Y2.10	Y2.11
Y1.7	Y1.6	Y2.12	Y2.13
Y1.5	Y1.4	Y2.14	Y2.15
Y1.3	Y1.2	ZP	ZP
Y1.1	Y1.0	UP	UP
UP	UP	Y3.0	Y3.1
ZP	ZP	Y3.2	Y3.3
Y0.15	Y0.14	Y3.4	Y3.5
Y0.13	Y0.12	Y3.6	Y3.7
Y0.11	Y0.10	Y3.8	Y3.9
Y0.9	Y0.8	Y3.10	Y3.11
Y0.7	Y0.6	Y3.12	Y3.13
Y0.5	Y0.4	Y3.14	Y3.15
Y0.3	Y0.2	ZP	ZP
Y0.1	Y0.0	UP	UP

DVP32SN11TN

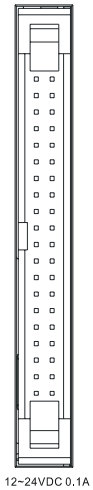

Y0	Y1
Y2	Y3
Y4	Y5
Y6	Y7
Y10	Y11
Y12	Y13
Y14	Y15
Y16	Y17
S/S	S/S
Y20	Y21
Y22	Y23
Y24	Y25
Y26	Y27
Y30	Y31
Y32	Y33
Y34	Y35
Y36	Y37
S/S	S/S

AS32AN02T-A

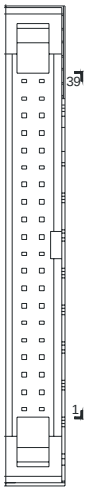

C0	C0
Y1.15	Y1.14
Y1.13	Y1.12
Y1.11	Y1.10
Y1.9	Y1.8
Y1.7	Y1.6
Y1.5	Y1.4
Y1.3	Y1.2
Y1.1	Y1.0
C0	C0
Y0.15	Y0.14
Y0.13	Y0.12
Y0.11	Y0.10
Y0.9	Y0.8
Y0.7	Y0.6
Y0.5	Y0.4
Y0.3	Y0.2
Y0.1	Y0.0

AS332T-A

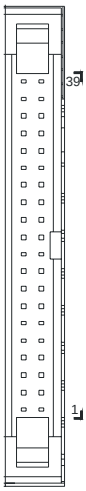

-	-
S/S	S/S
X0.15	X0.14
X0.13	X0.12
X0.11	X0.10
X0.9	X0.8
X0.7	X0.6
X0.5	X0.4
X0.3	X0.2
X0.1	X0.0
-	-
C0	C0
Y0.15	Y0.14
Y0.13	Y0.12
Y0.11	Y0.10
Y0.9	Y0.8
Y0.7	Y0.6
Y0.5	Y0.4
Y0.3	Y0.2
Y0.1	Y0.0

AS332P-A

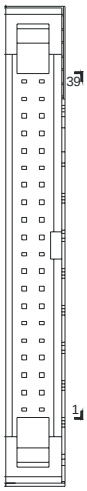

-	-
S/S	S/S
X0.15	X0.14
X0.13	X0.12
X0.11	X0.10
X0.9	X0.8
X0.7	X0.6
X0.5	X0.4
X0.3	X0.2
X0.1	X0.0
C0	C0
-	-
Y0.15	Y0.14
Y0.13	Y0.12
Y0.11	Y0.10
Y0.9	Y0.8
Y0.7	Y0.6
Y0.5	Y0.4
Y0.3	Y0.2
Y0.1	Y0.0

AS324MT-A

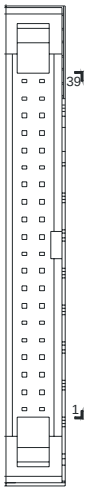

S/S	S/S
X0.11	X0.10
X0.9	X0.8
X0.7	X0.6
X0.5	X0.4
SG0	SG0
X0.3-	X0.3+
X0.2-	X0.2+
X0.1-	X0.1+
X0.0-	X0.0+
C0	C0
Y0.11	Y0.10
Y0.9	Y0.8
Y0.7	Y0.6
Y0.5	Y0.4
SG1	SG1
Y0.3-	Y0.3+
Y0.2-	Y0.2+
Y0.1-	Y0.1+
Y0.0-	Y0.0+

Figure 5	UB-10-OR16A

																		GND	+24V
C0	Y0	Y1	Y2	Y3	C1	Y4	Y5	Y6	Y7	C2	Y10	Y11	Y12	Y13	C3	Y14	Y15	Y16	Y17

Figure 6	UC-ET010-33B (1 m)	Male DB37 connector ↔ Male DB37 connector

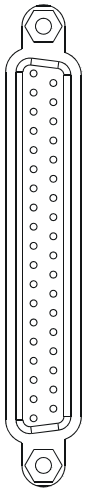

AH32AM10N-5B

X0.0	X0.1
X0.2	X0.3
X0.4	X0.5
X0.6	X0.7
X0.8	X0.9
X0.10	X0.11
X0.12	X0.13
X0.14	X0.15
S/S	S/S
	X1.0
X1.1	X1.2
X1.3	X1.4
X1.5	X1.6
X1.7	X1.8
X1.9	X1.10
X1.11	X1.12
X1.13	X1.14
X1.15	S/S
S/S	

AH32AN02T-5B/AH32AN02P-5B

X0.0	X0.1
X0.2	X0.3
X0.4	X0.5
X0.6	X0.7
X0.8	X0.9
X0.10	X0.11
X0.12	X0.13
X0.14	X0.15
ZP	ZP
UP	X1.0
X1.1	X1.2
X1.3	X1.4
X1.5	X1.6
X1.7	X1.8
X1.9	X1.10
X1.11	X1.12
X1.13	X1.14
X1.15	ZP
UP	

Figure 7	UB-10-ID32B

↑	X0	X2	X4	X6	X10	X12	X14	X16	X20	X22	X24	X26	X30	X32	X34	X36	S/S	S/S
↓	X1	X3	X5	X7	X11	X13	X15	X17	X21	X23	X25	X27	X31	X33	X35	X37	S/S	S/S

Figure 8	UB-10-OR32A

Pin 1	C0	Y0	Y1	Y2	Y3	C1	Y4	Y5	Y6	Y7	C2	Y10	Y11	Y12	Y13	C3	Y14	Y15	Y16	Y17
Pin 21	C4	Y20	Y21	Y22	Y23	C5	Y24	Y25	Y26	Y27	C6	Y30	Y31	Y32	Y33	C7	Y34	Y35	Y36	Y37

Figure 9	UB-10-OT32B

↑	Y0	Y2	Y4	Y6	Y10	Y12	Y14	Y16	Y20	Y22	Y24	Y26	Y30	Y32	Y34	Y36	UP	UP
↓	Y1	Y3	Y5	Y7	Y11	Y13	Y15	Y17	Y21	Y23	Y25	Y27	Y31	Y33	Y35	Y37	ZP	ZP

Figure 10	UB-10-OR32B

Pin 1	C0	Y0	Y1	Y2	Y3	C1	Y4	Y5	Y6	Y7	C2	Y10	Y11	Y12	Y13	C3	Y14	Y15	Y16	Y17
Pin 21	C4	Y20	Y21	Y22	Y23	C5	Y24	Y25	Y26	Y27	C6	Y30	Y31	Y32	Y33	C7	Y34	Y35	Y36	Y37

Figure 11	UB-10-OR16B

																		GND	+24V
C0	Y0	Y1	Y2	Y3	C1	Y4	Y5	Y6	Y7	C2	Y10	Y11	Y12	Y13	C3	Y14	Y15	Y16	Y17

Figure 12	UC-ET010-13B (1M)	Female MDR36 connector ↔ Female MDR36 connector

AH20MC-5A

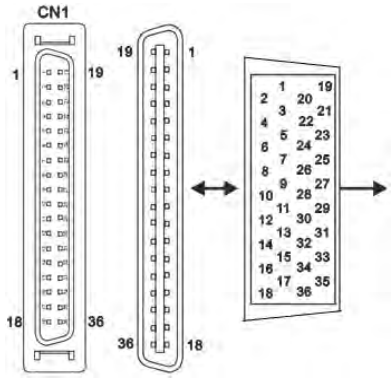

2	C2	1	C3	20	Y0.10	19	Y0.11
4	C0	3	C1	22	Y0.8	21	Y0.9
6	N/C	5	N/C	24	N/C	23	N/C
8	X0.15-	7	X0.3-	26	X0.15+	25	X0.3+
10	X0.2-	9	X0.14-	28	X0.2+	27	X0.14+
12	X0.12-	11	X0.13-	30	X0.12+	29	X0.13+
14	X0.11-	13	X0.1-	32	X0.11+	31	X0.1+
16	X0.0-	15	X0.10-	34	X0.0+	33	X0.10+
18	X0.8-	17	X0.9-	36	X0.8+	35	X0.9+

AH10EMC-5A

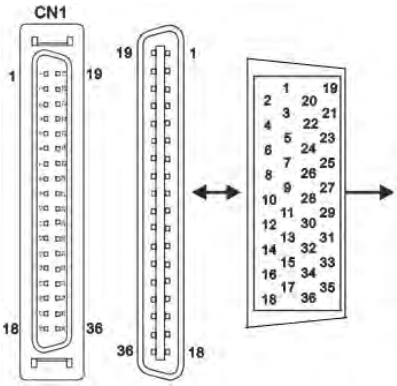

2	COM	1	COM	20	Y0.10	19	Y0.11
4	COM	3	COM	22	Y0.8	21	Y0.9
6	X1.5	5	S/S	24	X1.2	23	X1.3
8	X1.4	7	S/S	26	X1.0	25	X1.1
10	X0.3	9	S/S	28	X0.14	27	X0.15
12	X0.2	11	S/S	30	X0.12	29	X0.13
14	X0.11-	13	X0.1-	32	X0.11+	31	X0.1+
16	X0.0-	15	X0.10-	34	X0.0+	33	X0.10+
18	X0.8-	17	X0.9-	36	X0.8+	35	X0.9+

AH04HC-5A

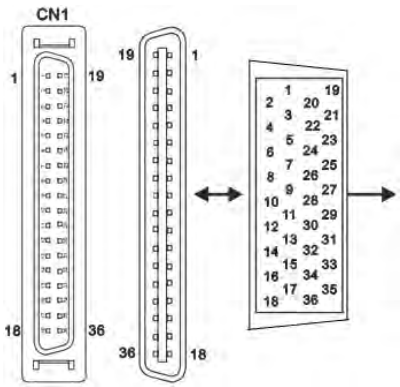

2	C2	1	C3	20	Y0.10	19	Y0.11
4	C0	3	C1	22	Y0.8	21	Y0.9
6	N/C	5	N/C	24	N/C	23	N/C
8	X0.15-	7	X0.3-	26	X0.15+	25	X0.3+
10	X0.2-	9	X0.14-	28	X0.2+	27	X0.14+
12	X0.12-	11	X0.13-	30	X0.12+	29	X0.13+
14	X0.11-	13	X0.1-	32	X0.11+	31	X0.1+
16	X0.0-	15	X0.10-	34	X0.0+	33	X0.10+
18	X0.8-	17	X0.9-	36	X0.8+	35	X0.9+

Figure 13 UB-10-IO16C

↑	C3	C2	C1	C0	N/C	N/C	X0.3-	X0.15-	X0.14-	X0.2-	X0.13-	X0.12-	X0.1-	X0.11-	X0.10-	X0.0-	X0.9-	X0.8-	24G	24G	FE
↓	Y0.11	Y0.10	Y0.9	Y0.8	N/C	N/C	X0.3+	X0.15+	X0.14+	X0.2+	X0.13+	X0.12+	X0.1+	X0.11+	X0.10+	X0.0+	X0.9+	X0.8+	N/C	24V	24V

Figure 14 UB-10-IO22C

↑	COM	COM	COM	COM	S/S	X1.5	S/S	X1.4	S/S	X0.3	S/S	X0.2	X0.1-	X0.11-	X0.10-	X0.0-	X0.9-	X0.8-	24G	24G	FE
↓	Y0.11	Y0.10	Y0.9	Y0.8	X1.3	X1.2	X1.1	X1.0	X0.15	X0.14	X0.13	X0.12	X0.1+	X0.11+	X0.10+	X0.0+	X0.9+	X0.8+	N/C	24V	24V

Figure 15	UC-ET010-15B (1 m)	Female MDR50 connector ↔ Female MDR50 connector

AH10PM-5A

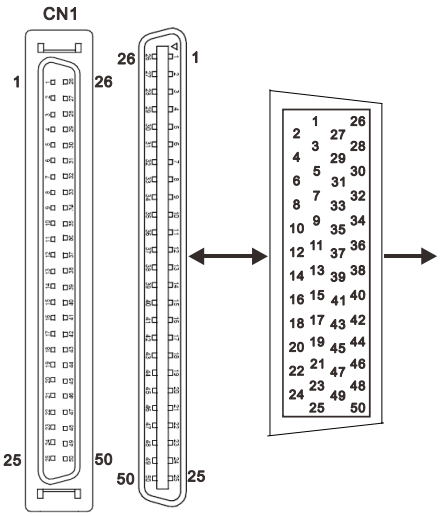

2	C2	1	C3	27	Y0.10	26	Y0.11
4	C0	3	C1	29	Y0.8	28	Y0.9
6	Y0.7-	5	N/A	31	Y0.7+	30	N/A
8	Y0.5-	7	Y0.6-	33	Y0.5+	32	Y0.6+
10	Y0.3-	9	Y0.4-	35	Y0.3+	34	Y0.4+
12	Y0.1-	11	Y0.2-	37	Y0.1+	36	Y0.2+
14	N/A	13	Y0.0-	39	N/A	38	Y0.0+
16	X0.15	15	N/A	41	X0.14	40	S/S
18	X0.11	17	X0.13	43	X0.10	42	X0.12
20	N/A	19	X0.9	45	N/A	44	X0.8
22	X0.3-	21	N/A	47	X0.3+	46	N/A
24	X0.1-	23	X0.2-	49	X0.1+	48	X0.2+
		25	X0.0-			50	X0.0+

AH15PM-5A

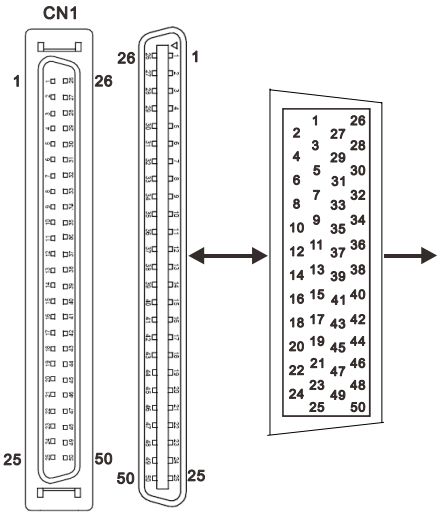

2	Y0.9	1	Y0.11	27	Y0.8	26	Y0.10
4	Y0.7-	3	COM	29	Y0.6+	28	Y0.7+
6	Y0.5-	5	Y0.6-	31	Y0.4+	30	Y0.5+
8	Y0.3-	7	Y0.4-	33	Y0.2+	32	Y0.3+
10	Y0.1-	9	Y0.2-	35	Y0.0+	34	Y0.1+
12	X1.5	11	Y0.0-	37	X1.4	36	S/S
14	X1.1	13	X1.3	39	X1.0	38	X1.2
16	X0.13	15	X0.15	41	X0.12	40	X0.14
18	X0.9-	17	X0.11	43	X0.9+	42	X0.10
20	X0.7	19	X0.8-	45	X0.6	44	X0.8+
22	X0.3-	21	X0.5	47	X0.3+	46	X0.4
24	X0.1-	23	X0.2-	49	X0.1+	48	X0.2+
		25	X0.0-			50	X0.0+

Figure 16	UB-10-IO24C

↑	C3	C2	C1	C0	N/C	Y0.7-	Y0.6-	Y0.5-	Y0.4-	Y0.3-	Y0.2-	Y0.1-	Y0.0-	N/C						
							N/C	X0.15	X0.13	X0.11	X0.9	N/C	N/C	X0.3-	X0.2-	X0.1-	X0.0-	24G	24G	FE
↓	Y0.11	Y0.10	Y0.9	Y0.8	N/C	Y0.7+	Y0.6+	Y0.5+	Y0.4+	Y0.3+	Y0.2+	Y0.1+	Y0.0+	N/C						
							S/S	X0.14	X0.12	X0.10	X0.8	N/C	N/C	X0.3+	X0.2+	X0.1+	X0.0+	N/C	24V	24V

Figure 17	UB-10-IO34C

↑	Y0.11	Y0.9	COM	Y0.7-	Y0.6-	Y0.5-	Y0.4-	Y0.3-	Y0.2-	Y0.1-	Y0.0-	X1.5	X1.3	X1.1						
							X0.15	X0.13	X0.11	X0.9-	X0.8-	X0.7	X0.5	X0.3-	X0.2-	X0.1-	X0.0-	24G	24G	FE
↓	Y0.10	Y0.8	Y0.7+	Y0.6+	Y0.5+	Y0.4+	Y0.3+	Y0.2+	Y0.1+	Y0.0+	S/S	X1.4	X1.2	X1.0						
							X0.14	X0.12	X0.10	X0.9+	X0.8+	X0.6	X0.4	X0.3+	X0.2+	X0.1+	X0.0+	N/C	24V	24V

Figure 18	AHACAB06-5A (0.6 m) AHACAB10-5A (1 m) AHACAB15-5A (1.5 m) AHACAB30-5A (3 m) AHACAB50-5A (5 m) AHACABA0-5A (10 m) AHACABA5-5A (15 m) AHACABB0-5A (20 m) AHACABC0-5A (30 m) AHACABD0-5A (40 m) AHACABE0-5A (50 m) AHACABF0-5A (60 m) AHACABG0-5A (70 m) AHACABH0-5A (80 m) AHACABJ0-5A (90 m) AHACABK0-5A (100 m)	Male MDR20 connector ↔ Male MDR20 connector

Figure 19	UB-10-ID16A

AS332T-A										
↑	X0.0	X0.2	X0.4	X0.6	X0.8	X0.10	X0.12	X0.14	S/S	-
	Y0.0	Y0.2	Y0.4	Y0.6	Y0.8	Y0.10	Y0.12	Y0.14	C0	-
↓	X0.1	X0.3	X0.5	X0.7	X0.9	X0.11	X0.13	X0.15	S/S	-
	Y0.1	Y0.3	Y0.5	Y0.7	Y0.9	Y0.11	Y0.13	Y0.15	C0	-

AS332P-A										
↑	X0.0	X0.2	X0.4	X0.6	X0.8	X0.10	X0.12	X0.14	S/S	-
	Y0.0	Y0.2	Y0.4	Y0.6	Y0.8	Y0.10	Y0.12	Y0.14	-	C0
↓	X0.1	X0.3	X0.5	X0.7	X0.9	X0.11	X0.13	X0.15	S/S	-
	Y0.1	Y0.3	Y0.5	Y0.7	Y0.9	Y0.11	Y0.13	Y0.15	-	C0

AS324MT-A										
↑	X0.0+	X0.1+	X0.2+	X0.3+	SG0	X0.4	X0.6	X0.8	X0.10	S/S
	Y0.0+	Y0.1+	Y0.2+	Y0.3+	SG1	Y0.4	Y0.6	Y0.8	Y0.10	C0
↓	X0.0-	X0.1-	X0.2-	X0.3-	SG0	X0.5	X0.7	X0.9	X0.11	S/S
	Y0.0-	Y0.1-	Y0.2-	Y0.3-	SG1	Y0.5	Y0.7	Y0.9	Y0.11	C0

3

Chapter 3 Motion Control Cables

Table of Contents

3.1 CANopen Motion Control Cables 3-2

3.1.1 DVP-MC Series (DVP10MC11T) 3-2

3.1.2 DVP-PM Series.....3-3

3.2 DMCNET Motion Control Cables.....3-4

3.2.1 AH20MC-5A 3-4

3.3 EtherCAT Motion Control Cables 3-6

3.3.1 AH10EMC-5A.....3-6

3.4 Cable Models 3-7

3.5 Descriptions of Cable Models.....3-9

3.1 CANopen Motion Control Cables

3.1.1 DVP-MC Series (DVP10MC11T)

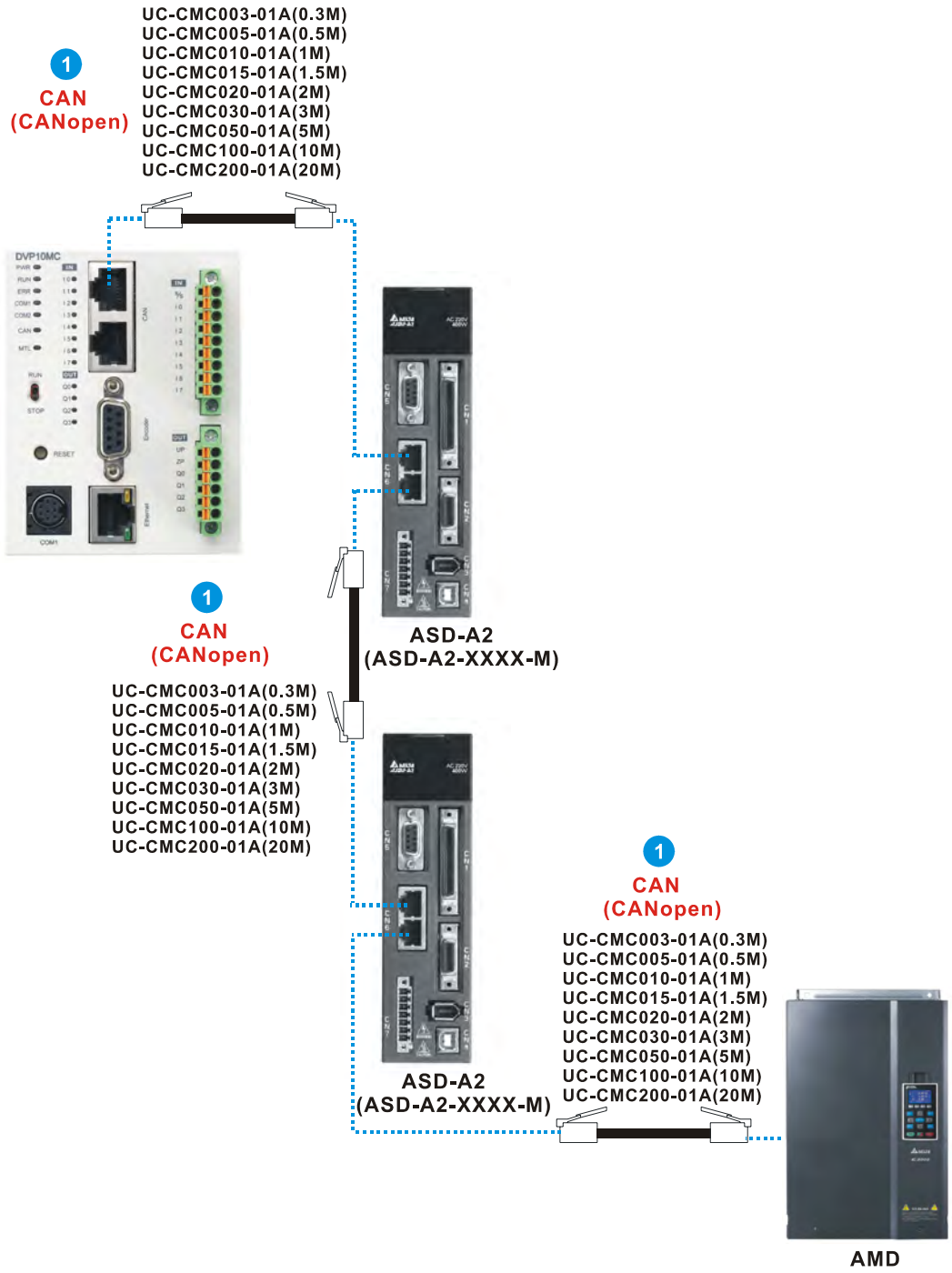

Note 1: Please refer to section 3.4 for more information about 1, 2, 3, etc.

Note 2: It is suggested that users connect the terminator TAP-TR01 to each end of a CANopen cable. The resistance of TAP-TR01 is 121 Ω. Please refer to Chapter 4 for more information.

3.1.2 DVP-PM Series

DVP-PM Series (DVP10PM00M, DVP20PM00D, DVP20PM00M)

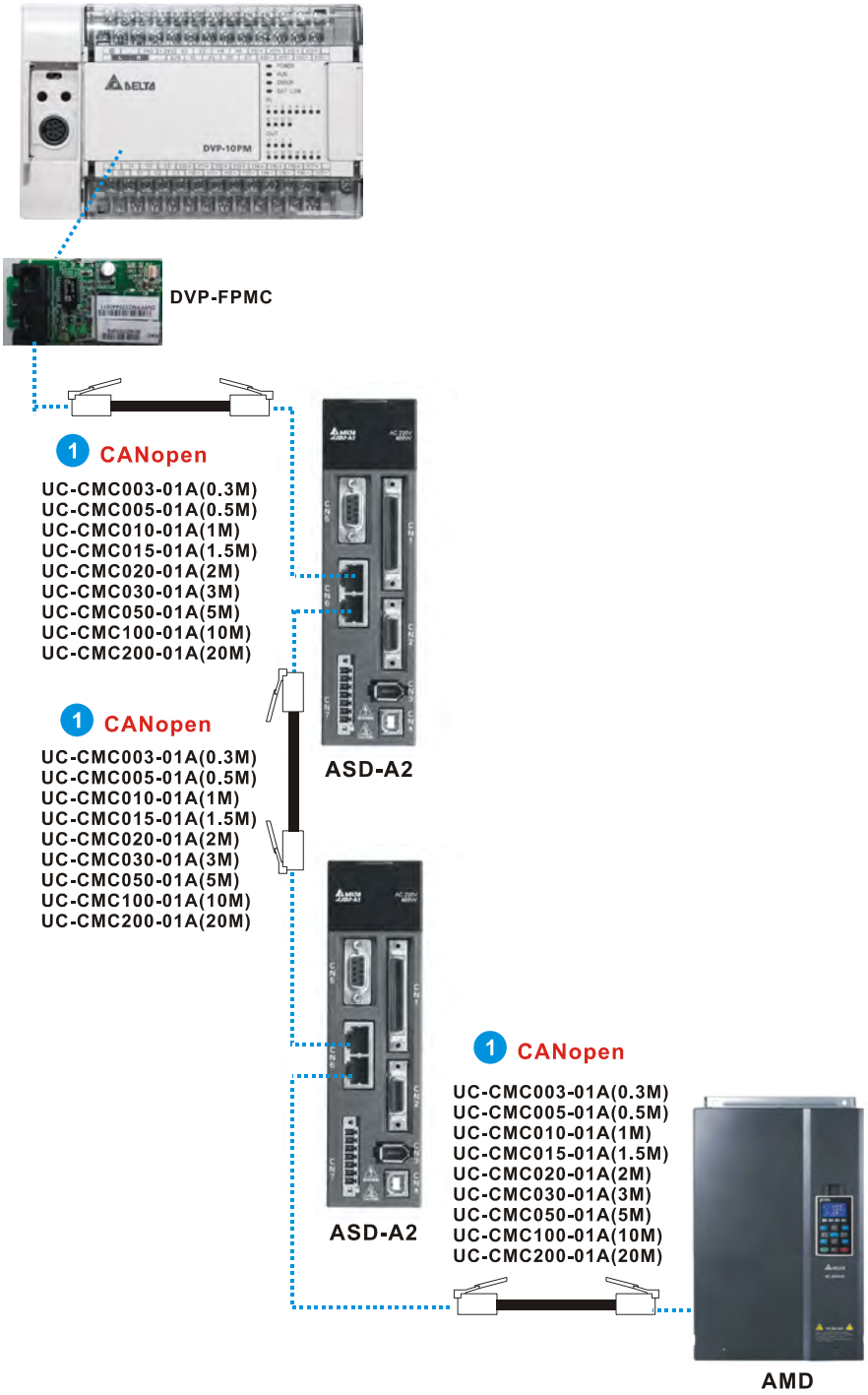

Note 1: Please refer to section 3.4 for more information about 1, 2, 3, etc.

Note 2: It is suggested that users connect the terminator TAP-TR01 to each end of a CANopen cable. The resistance of TAP-TR01 is 121 Ω. Please refer to Chapter 4 for more information.

3.2 DMCNET Motion Control Cables

3.2.1 AH20MC-5A

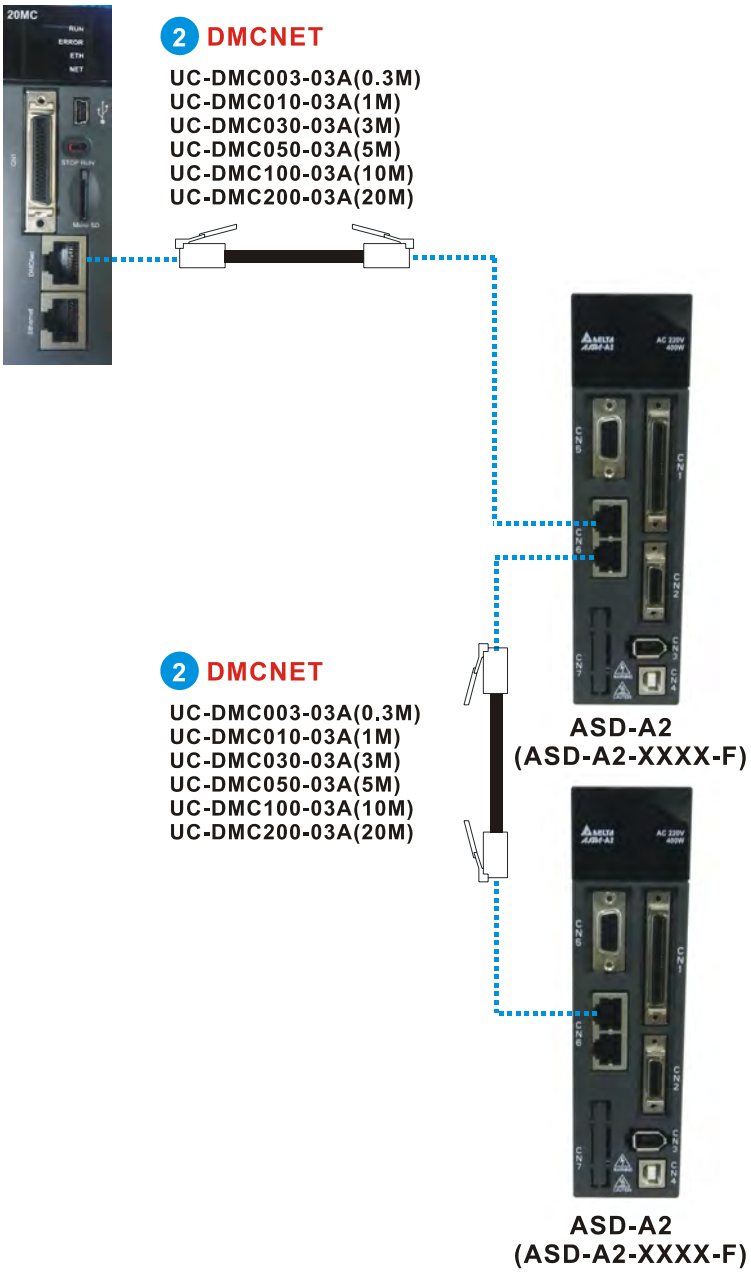

Note 1: Please refer to section 3.4 for more information about 1, 2, 3, etc.

Note 2:

1. If a DMCNET cable is long (longer than five meters in general), it is suggested that users connect a terminator to each end of the cable to prevent unstable signals from causing a servo drive to operate abnormally. An RJ45 adapter with one male connector and two female connectors is used to connect a terminator to the starting end of a DMCNET cable.

2. If a DMCNET cable is shorter than five meters, only the terminal end of the cable needs to be connected to a terminator.

3. The resistance of the terminator TAP-TR02 is 150 Ω. The RJ45 adapter UN-03EN-04A is shown below.

Terminator (TAP-TR02)	RJ45 adapter (UN-03EN-04A, UN-03EN-05A)

4. Please refer to the figures below for more information about connecting terminators to the starting end the terminal end of a cable.

Connecting a terminator to the starting end of a cable	Connecting a terminator to the terminal end of a cable
	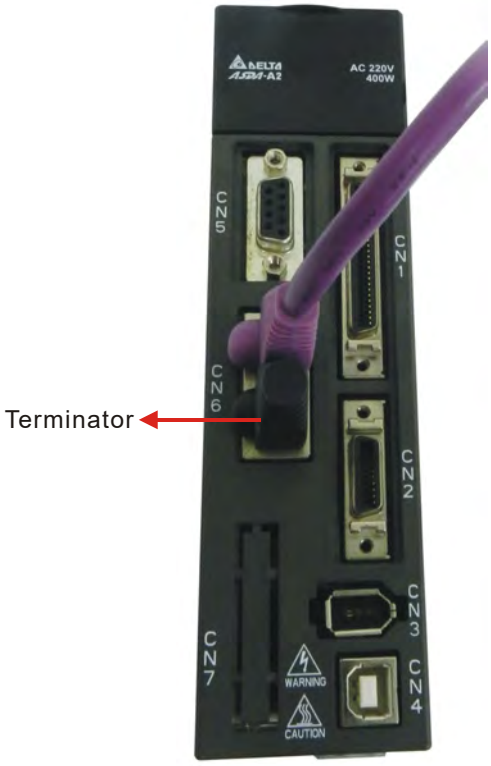

3.3 EtherCAT Motion Control Cables

3.3.1 AH10EMC-5A

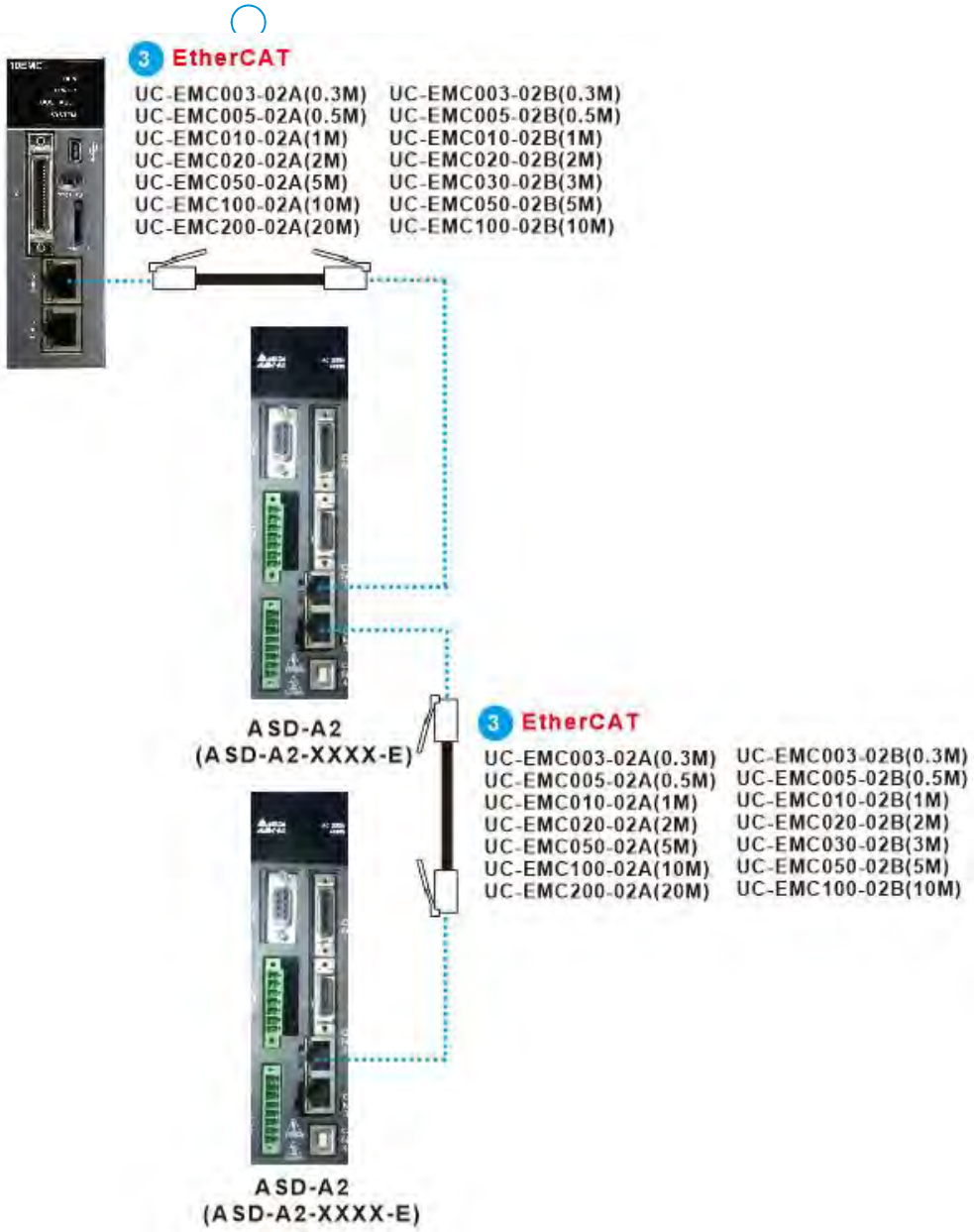

Note: Please refer to section 3.4 for more information about 1, 2, 3, etc.

3.4 Cable Models

1 CANopen

CPU	Adapter	Module/Interface card	Cable	Machine connected
DVP10MC11T	--	--	RJ45 ↔ RJ45	AMD/ASD
			UC-CMC003-01A (0.3 m) (Figure 1) UC-CMC005-01A (0.5 m) (Figure 1) UC-CMC010-01A (1 m) (Figure 1) UC-CMC015-01A (1.5 m) (Figure 1) UC-CMC020-01A (2 m) (Figure 1) UC-CMC030-01A (3 m) (Figure 1) UC-CMC050-01A (5 m) (Figure 1) UC-CMC100-01A (10 m) (Figure 1) UC-CMC200-01A (20 m) (Figure 1)	

2 DMCNET

CPU	Adapter	Module/Interface card	Cable	Machine connected
--	--	AH20MC-5A	RJ45 ↔ RJ45	ASD
			UC-CMC003-01A (0.3 m) (Figure 1) UC-CMC005-01A (0.5 m) (Figure 1) UC-CMC010-01A (1 m) (Figure 1) UC-CMC015-01A (1.5 m) (Figure 1) UC-CMC020-01A (2 m) (Figure 1) UC-CMC030-01A (3 m) (Figure 1) UC-CMC050-01A (5 m) (Figure 1) UC-CMC100-01A (10 m) (Figure 1) UC-CMC200-01A (20 m) (Figure 1)	

3 EtherCAT

CPU	Adapter	Module/Interface card	Cable	Machine connected
AH10EMC-5A	--	--	RJ45 ↔ RJ45	ASD
			UC-EMC003-02A (0.3 m) (Figure 2) UC-EMC005-02A (0.5 m) (Figure 2) UC-EMC010-02A (1 m) (Figure 2) UC-EMC020-02A (2 m) (Figure 2) UC-EMC050-02A (5 m) (Figure 2) UC-EMC100-02A (10 m) (Figure 2) UC-EMC200-02A (20 m) (Figure2) UC-EMC003-02B (0.3M) (Figure 2) UC-EMC005-02B (0.5M) (Figure 2) UC-EMC010-02B (1M) (Figure 2) UC-EMC020-02B (2M) (Figure 2) UC-EMC030-02B (3M) (Figure 2) UC-EMC050-02B (5M) (Figure 2) UC-EMC100-02B (10M) (Figure 2)	

3.5 Descriptions of Cable Models

Figure 1	UC-CMC003-01A (0.3 m) UC-CMC005-01A (0.5 m) UC-CMC010-01A (1 m) UC-CMC015-01A (1.5 m) UC-CMC020-01A (2 m) UC-CMC030-01A (3 m) UC-CMC050-01A (5 m) UC-CMC100-01A (10 m) UC-CMC200-01A (20 m)	RJ45 ↔ RJ45

CANopen	
1 (Black): CAN+	5 (Blue): --
2 (Orange): CAN-	6 (White): CAN_SHLD
3 (Brown): CAN_GND	7 (Yellow): CAN_GND
4 (Gray): --	8 (Green): --

DMCNET	
1 (Black): DMCNET_D1+	5 (Blue): --
2 (Orange): DMCNET_D1-	6 (White): DMCNET_D2-
3 (Brown): DMCNET_D2+	7 (Yellow): DMCNET_GND
4 (Gray): --	8 (Green): DMCNET_GND

Figure 2	UC-EMC003-02A (0.3 m) UC-EMC005-02A (0.5 m) UC-EMC010-02A (1 m) UC-EMC020-02A (2 m) UC-EMC050-02A (5 m) UC-EMC100-02A (10 m) UC-EMC200-02A (20 m) UC-EMC003-02B (0.3M) UC-EMC005-02B (0.5M) UC-EMC010-02B (1M) UC-EMC020-02B (2M) UC-EMC030-02B (3M) UC-EMC050-02B (5M) UC-EMC100-02B (10M)	RJ45 ↔ RJ45

EtherCAT
1: EtherCAT_TX+ (Orange/White) 2: EtherCAT_TX- (Orange) 3: EtherCAT_RX+ (Green/White) 6: EtherCAT_RX- (Green)

Note: Delta launches UC-EMCxxx-02B series equipped with EtherCAT communication that is cost-effective and has the competitive advantage as an EtherCAT solution.

Item	UC-EMCxxx-02A	UC-EMCxxx-02B
Certification	ETG	UL
Connector		
Cable color	Green	Green
Length (M)	0.3/0.5/1/2/5/10/20	0.3/0.5/1/2/3/5/10
Rated voltage (V)	600	300

MEMO

4

Chapter 4 Networking Cables

Table of Contents

4.1 CANopen Communication 4-2

4.1.1 Applicable CANopen Models 4-2

4.1.2 Specifications Related to CANopen Communication 4-3

4.1.3 Terminator 4-6

4.2 PROFIBUS DP Communication 4-8

4.2.1 Applicable PROFIBUS DP Models 4-9

4.2.2 Specifications Related to PROFIBUS DP Communication 4-9

4.3 DeviceNet Communication 4-11

4.3.1 Applicable DeviceNet Models 4-11

4.3.2 Specifications Related to DeviceNet 4-12

4.3.3 Terminator 4-14

4.1 CANopen Communication

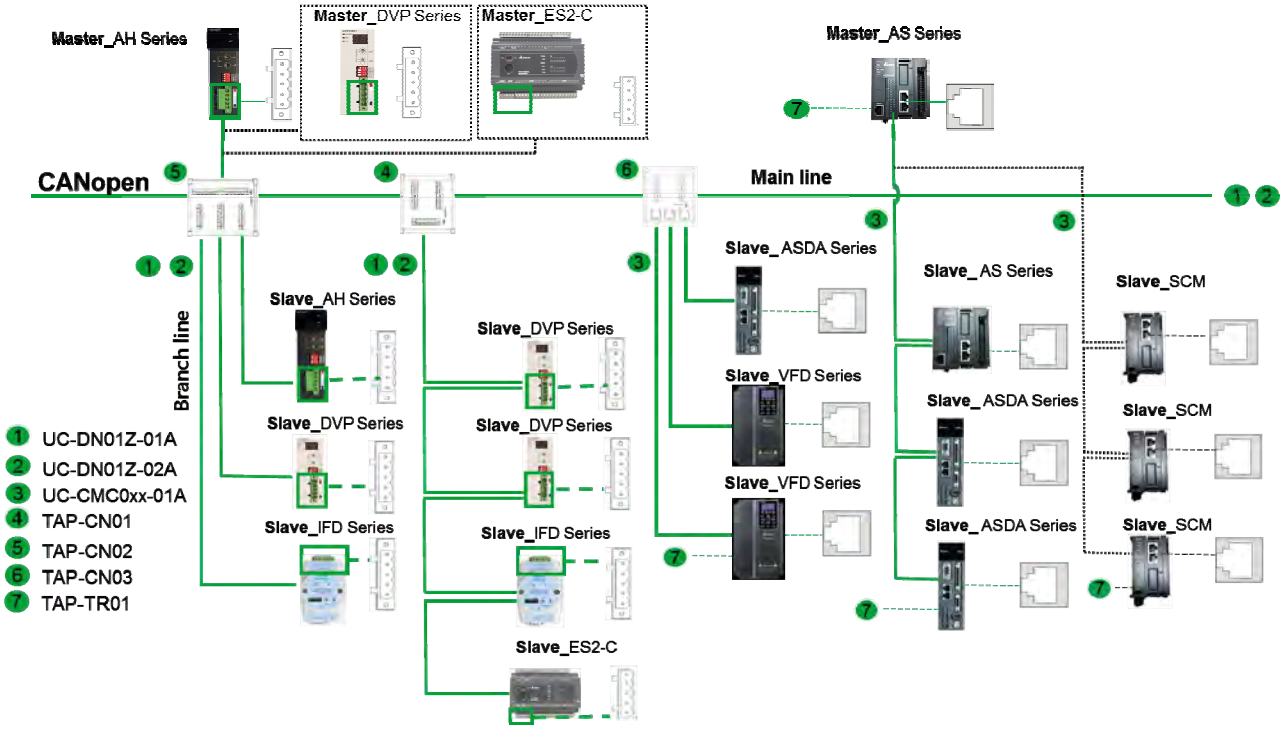

Note: CANopen suggests that users connect a terminator to each end of a CANopen cable to main the stability of signals. Please refer to section 4.1.3 for more information about a terminator.

4.1.1 Applicable CANopen Models

Communication port	Classification	Model	Connector	Cable	Distribution box
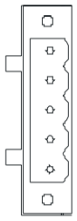	Master_AH series	AH10COPM-5A	--	1	4 5
	Master_DVP series	DVPCOPM-SL	--	1	4 5
	Slave_ AH series	AH10COPM-5A	--	2	5
	Slave_ DVP series	DVPCP02-H2	--	2	4 5
	Slave_IFD series	IFD9503	--	2	4 5
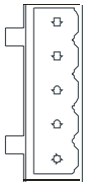	Master_ES2-C	DVP32ES200RC, DVP32ES200TC	--	1	4 5
	Slave _ES2-C	DVP32ES200RC, DVP32ES200TC	--	2	4 5

Communication port	Classification	Model	Connector	Cable	Distribution box
	Slave_VFD series	VFD-C2000 series, VFD-CP2000 series, VFD-CH200 series, VFD-C200 series, VFD-E series	--	3	6
	Slave_ASDA series	ASDA-A2 series	--	3	6
	Master_AS series	AS332T-A, AS332P-A, AS324MT-A	--	3	--
	Slave_SCM	AS00SCM-A	--	3	--

4.1.2 Specifications Related to CANopen Communication

- 5-pin connector (CANopen)

Pinout			
Pin	**Signal**	**Description**	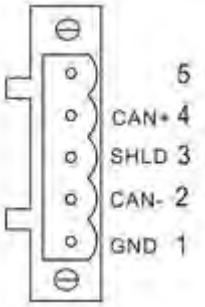
1	GND	0 V DC	
2	CAN-	Signal -	
3	SHLD	Shielded cable	
4	CAN+	Signal +	
5	Reserved	Reserved	

- 5-pin connector (ES2-C)

Pinout			
Pin	**Signal**	**Description**	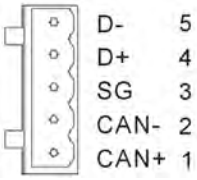
1	CAN+	Signal +	
2	CAN-	Signal -	
3	SG	0 V DC	
4	D+	RS-485 +	
5	D-	RS-485 -	

- RJ45 connector

Pinout			
Pin	**Signal**	**Description**	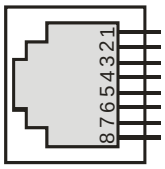
1	CAN+	Signal +	
2	CAN-	Signal -	
3	CAN_GND	0 V DC	
4	RESE_1	Reserved	
5	RESE_2	Reserved	
6	CAN_SHLD	Shielded cable	
7	CAN_GND	0 V DC	
8	RESE_3	Reserved	

- Cable

		Model	Length	AWG
1		UC-DN01Z-01A	305 m	2#15, 2#18 SHLD PVC (Thick)
2		UC-DN01Z-02A	305 m	2#22, 2#24 SHLD PVC (Thin)
3		UC-CMC003-01A	0.3 m	4#26, 1#24 PVC (Thin)
3		UC-CMC005-01A	0.5 m	4#26, 1#24 PVC (Thin)
3		UC-CMC010-01A	1.0 m	4#26, 1#24 PVC (Thin)
3		UC-CMC015-01A	1.5 m	4#26, 1#24 PVC (Thin)
3		UC-CMC020-01A	2.0 m	4#26, 1#24 PVC (Thin)
3		UC-CMC030-01A	3.0 m	4#26, 1#24 PVC (Thin)
3		UC-CMC050-01A	5.0 m	4#26, 1#24 PVC (Thin)
3		UC-CMC100-01A	10.0 m	4#26, 1#24 PVC (Thin)
3		UC-CMC200-01A	20.0 m	4#26, 1#24 PVC (Thin)

Note 1: The cable is sold by the meter. Max. ordering quantity: 305 meters(1 roll). Min. ordering quantity: 1 meter.

Note 2: ① UC-DN01Z-01A and ② UC-DN01Z-02A can be used as main cables or branch cables. The maximum communication distances that the two cables support are different. The maximum communication lengths that the two cables support under different CANopen transmission rates are shown below.

CANopen transmission rate (bit/s)	125 K	250 K	500 K	1 M
Maximum communication distance of UC-DN01Z-01A (m)	500	250	100	40
Maximum communication distance of UC-DN01Z-02A (m)	100	100	100	40

Note 3: CANopen stipulates the maximum communication distances of transmission rates. The relation between transmission rates and maximum communication distances is shown below.

Transmission rate (bit/s)	10 K	20 K	50 K	125 K	250 K	500 K	800 K	1 M
Maximum communication distance (m)	5000	2500	1000	500	250	100	50	40

- Distribution box

Model		**Circuitry**
④ **TAP-CN01**	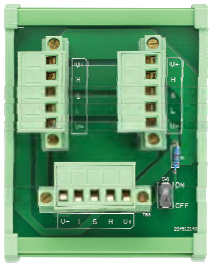	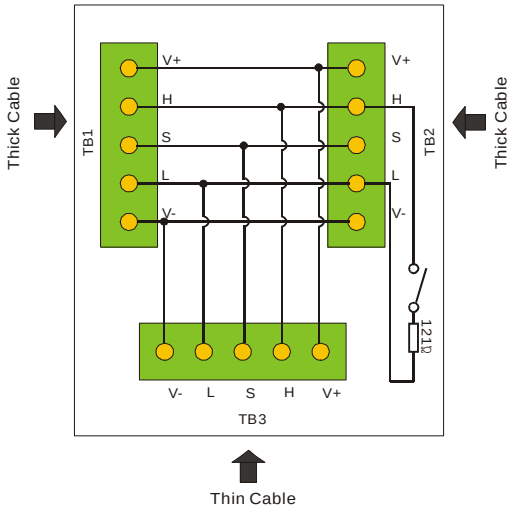

Model		Circuitry
5 TAP-CN02		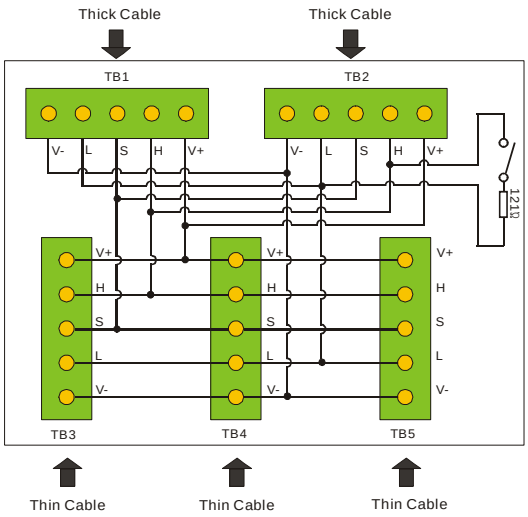
6 TAP-CN03		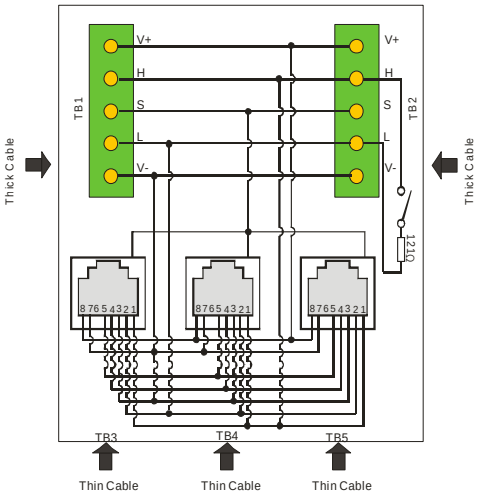
Connector	Removable terminal block (5.08 mm)	
Terminator	121 Ω	

4.1.3 Terminator

CANopen suggests that users connect a terminator to each end of a CANopen cable. A terminator functions as the impedance matching of communication signals. It can minimize the phenomenon that signal reflection interferes with normal signal transmission. The resistance of a terminator is 121 Ω (1/4 watts).

1. Terminator connected to the starting end of a cable: The terminator in a distribution box can be used, that is, the terminator switch on a distribution box can be set to ON.

2. Terminator connected to the terminal end of a cable: The terminator TAP-TR01 needs to be connected.

- The resistance of the terminator TAP-TR01 is 121 Ω. TAP-TR01 is shown below.

7 **TAP-TR01**

4.2 PROFIBUS DP Communication

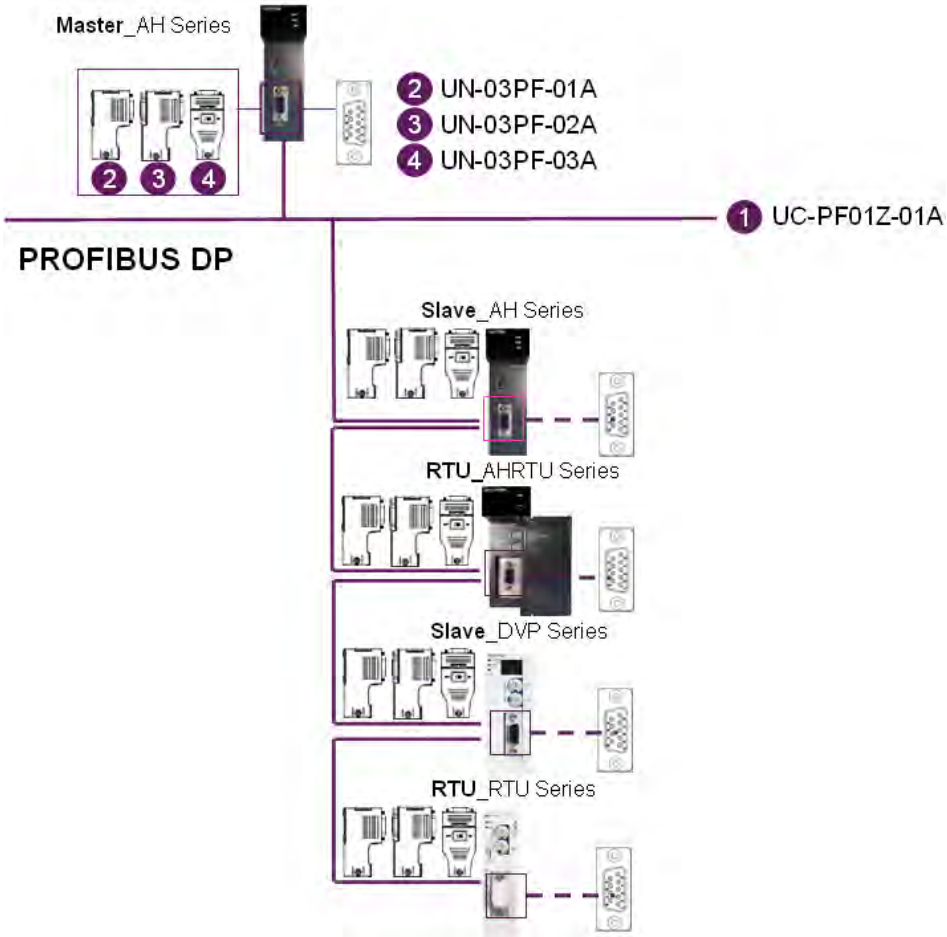

Note: If there are more than 32 pieces of hardware equipment in a network, or the communication length to which a communication rate corresponds is longer than the length specified (in the table below), the RS-485 repeater IFD5710 can be used to make the connection between cables longer.

Communication rate (bps)	9.6 K	19.2 K	93.75 K	187.5 K	500 K	1.5 M	3 M	6 M	12 M
Length (m)	1200			1000	400	200	100		

4.2.1 Applicable PROFIBUS DP Models

Communication port	Classification	Model	Connector	Cable	Distribution box
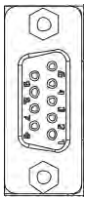	Master_AH series	AH10PFBM-5A	2 3 4	1	--
	Master_DVP series	--	--	--	--
	Slave_AH series	AH10PFBS-5A	2 3 4	1	--
	Slave_DVP series	DVPPF01-S, DVPPF02-SL, DVPPF02-H2	2 3 4	1	--
	RTU_AHRTU series	AHRTU-PFBS-5A	2 3 4	1	--
	RTU_RTU series	RTU-PD01	2 3 4	1	--

4_

4.2.2 Specifications Related to PROFIBUS DP Communication

- Pinout

Pin	Signal	Description
1	N/C	--
2	N/C	--
3	Rxd/Txd-P	Receiving/Transmitting data (Positive pole)
4	N/C	--
5	DGND	Data reference potential
6	VP	Providing positive voltage
7	N/C	--
8	Rxd/Txd-N	Receiving/Transmitting data (negative pole)
9	N/C	--

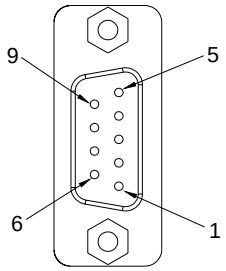

- Connector

	2	3	4
Model	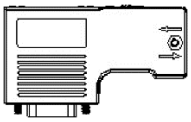 UN-03PF-01A	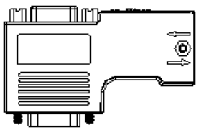 UN-03PF-02A	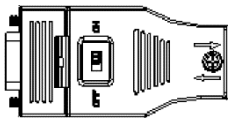 UN-03PF-03A
Connector	Male DB9 connector	Male DB9 connector	Male DB9 connector
Programming connector	--	Female DB9 connector	--
Terminator*[1]	120 Ω	120 Ω	120 Ω

*[1.] If connectors are connected to both ends of a PROFIBUS network, please set the connector switches to ON. If connectors are not connected to both ends of a PROFIBUS network, please set the connector switches to OFF.

- Cable

		Model	Length	Diameter
1		UC-PF01Z-01A	200 m	1PR #22 AWG FRFPE FRPE

Note: The cable is sold by the meter. Max. ordering quantity: 305 meters(1 roll). Min. ordering quantity: 1 meter.

4.3 DeviceNet Communication

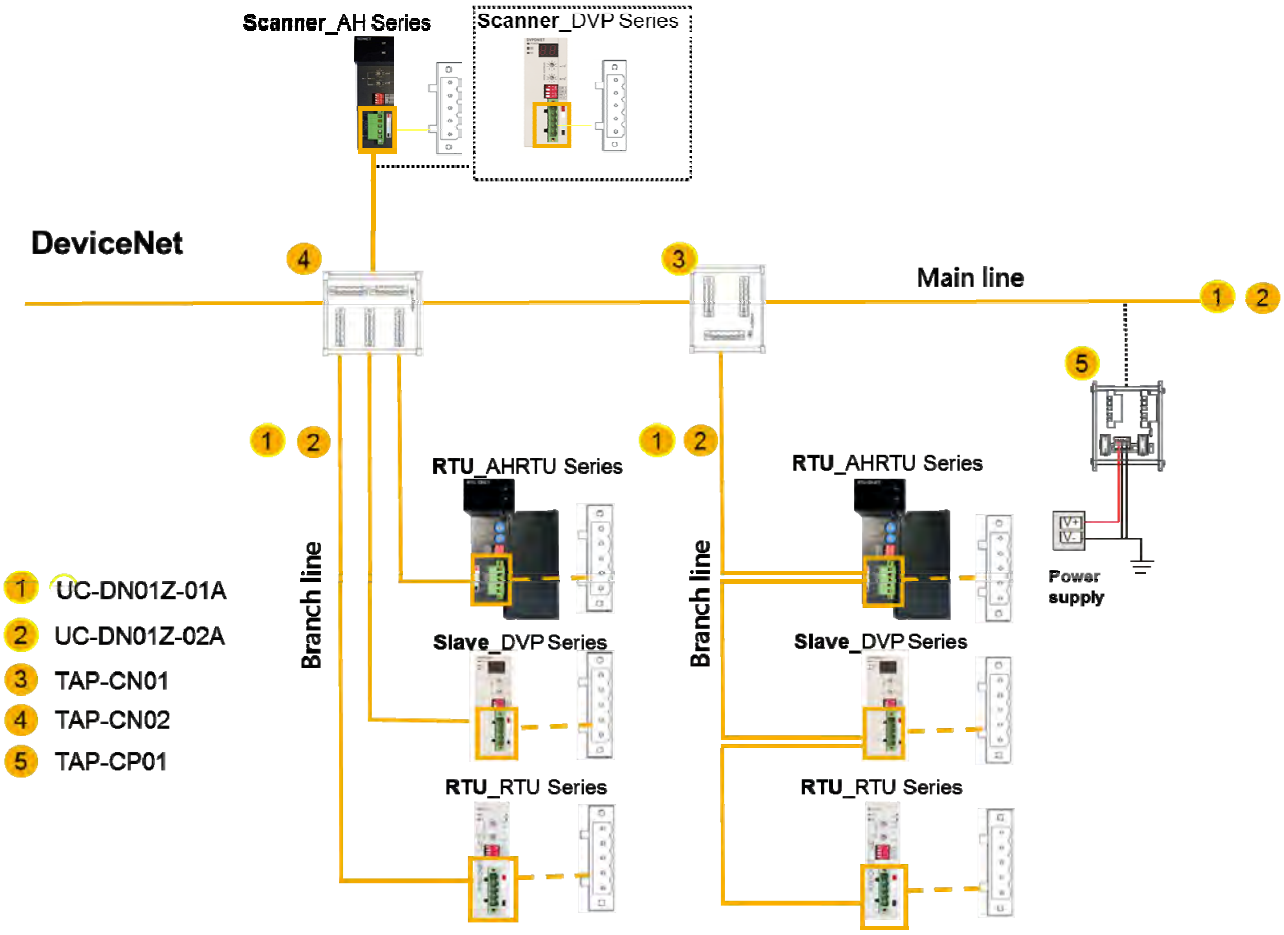

Note: DeviceNet requires that users connect a terminator to each end of a DeviceNet cable. The resistance of the terminators connected is 121 Ω (1/4 watts). Please refer to section 4.3.3 for more information about a terminator.

4.3.1 Applicable DeviceNet Models

Communication port	Classification	Model	Cable	Distribution box
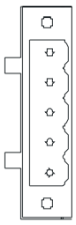	Scanner_AH series	AH10DNET-5A	1 2	3 4 5
	Scanner_DVP series	DVPDNET-SL	1 2	3 4 5
	Slave_AH series	--	--	--
	Slave_DVP series	DVPDT01-S, DVPDT02-H2, RTU-DNET	1 2	3 4 5
	RTU_AHRTU series	AHRTU-DNET-5A, AH10EMC-5A	1 2	3 4 5
	RTU_RTU series	RTU-DNET	1 2	3 4 5

4.3.2 Specifications Related to DeviceNet

- Pinout

Pin	Signal	Color	Description
1	V-	Black	0 V DC
2	CAN_L	Blue	Signal
3	SHIELD	-	Shielded cable
4	CAN_H	White	Signal +
5	V+	Red	24 V DC

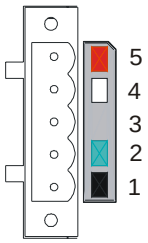

- Cable

		Model	Length	AWG
1		UC-DN01Z-01A	305 m	2#15, 2#18 SHLD PVC (Thick)
2		UC-DN01Z-02A	305 m	2#22, 2#24 SHLD PVC (Thin)

Note 1: The cable is sold by the meter. Max. ordering quantity: 305 meters(1 roll). Min. ordering quantity: 1 meter.

Note 2: 1 UC-DN01Z-01A and 2 UC-DN01Z-02A can be used as main cables or branch cables. The maximum communication distances that the two cables support are different. The maximum communication lengths that the two cables support under different DeviceNet transmission rates are shown below.

DeviceNet transmission rate (bit/s)	125 K	250 K	500 K
Maximum communication distance of UC-DN01Z-01A (m)	500	250	100
Maximum communication distance of UC-DN01Z-02A (m)	100	100	100

Note 2: DeviceNet stipulates the maximum communication distances of transmission rates. The relation between transmission rates and maximum communication distances is shown below.

Transmission rate (bit/s)	10 K	20 K	50 K	125 K	250 K	500 K
Maximum communication distance (m)	5000	2500	1000	500	250	100

- Distribution box

Model		Circuitry
3 TAP-CN01	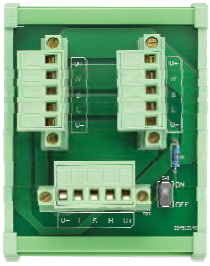	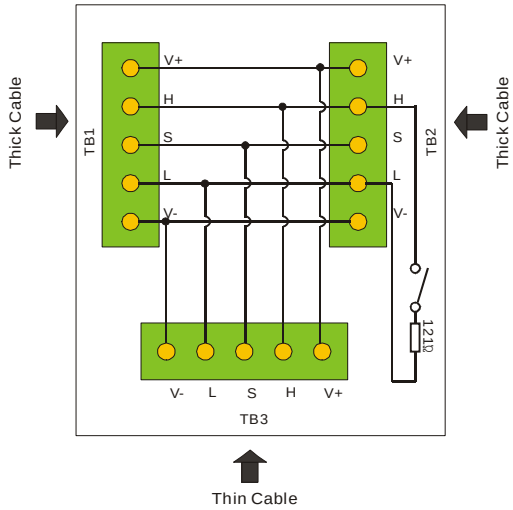
4 TAP-CN02		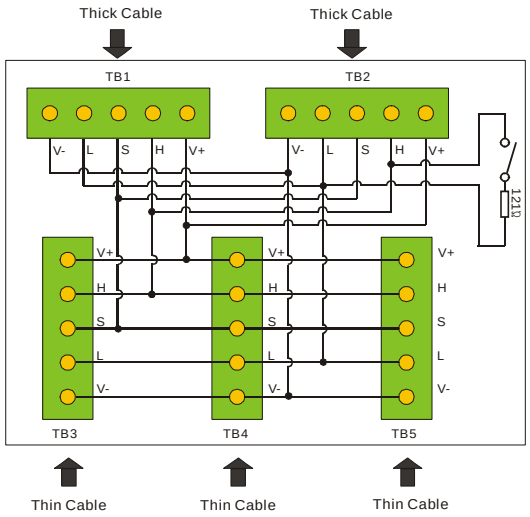
5 TAP-CP01 (Power supply distribution box)		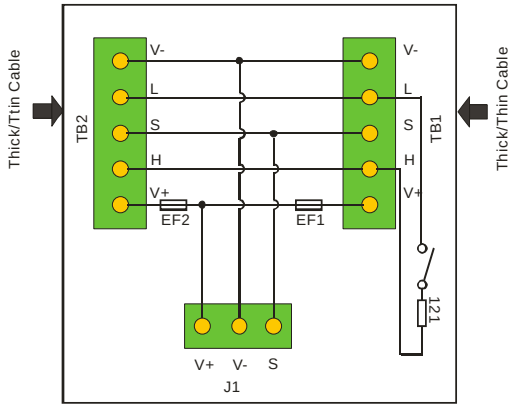
Connector	Removable terminal block (5.08 mm)	
Terminator	121Ω	

4.3.3 Terminator

DeviceNet requires that users connect a terminator to each end of a DeviceNet cable. The resistance of the terminators connected is 121 Ω (1/4 watts).

1. Terminator connected to the starting end of a cable: The terminator in a distribution box can be used, that is, the terminator switch on a distribution box can be set to ON.

2. Terminator connected to the terminal end of a cable: A terminator needs to be connected. The resistance of the terminator is 121 Ω (1/4 watts).

A

Appendix A Cable Table

Table of Contents

A.1 Cable Table A-2

A.1 Cable Table

Type	Model	Purpose
Cables for PLC programming & serial communication	UC-PRG015-01A	Programming cable for PLC (mini USB) to PC, 1.5 m
	UC-PRG015-02A	Programming cable for TP(USB B type) to PC, 1.5 m
	UC-PRG020-12A	Programming cable for PLC (DB9 female/8-pin mini-DIN male) to PC, 2 m
	UC-PRG030-01A	Programming cable for PLC (mini USB) to PC, 3 m
	UC-PRG030-02A	Programming cable for TP (USB Type-B) to PC, 3 m
	UC-PRG030-10A	Programming cable for PLC/HMI/TP (DB9 female) to PC, 3 m
	UC-PRG030-20A	Programming cable for PLC/HMI (RJ45) to PC, 3 m
	UC-MS010-02A	Communication cable for PLC (8-pin mini-DIN male) to PC, 1 m
	UC-MS020-01A	Communication cable for PLC (8-pin mini-DIN male) to PC, 2 m
	UC-MS020-06A	Communication cable for PLC (8-pin mini-DIN male) to HMI, 2 m
	UC-MS030-01A	Communication cable for PLC (8-pin mini-DIN male) to PC, 3 m
	UC-MS030-06A	Communication cable for PLC (8-pin mini-DIN male) to HMI, 3 m
	UC-MS030-03A	Communication cable for TP (DB9 female) to AH500 PLC, 3 m
	UC-MS030-04A	Communication cable for AH500 PLC (DB9 male) to DMV, 3 m
Extension cables for I/O modules	UC-ET010-13B	I/O extension cable for external terminal module (HDC), 1 m
	UC-ET010-15B	I/O extension cable for external terminal module (HDC), 1 m
	UC-ET010-24A	I/O extension cable for external terminal module (MIL connector IDC40 to IDC40), 1 m
	UC-ET010-24B	I/O extension cable for external terminal module (MIL connector IDC40 to IDC40), 1 m (shield)
	UC-ET010-24C	I/O extension cable for external terminal module (MIL connector IDC40 to IDC20x2), 1 m
	UC-ET010-24D	I/O extension cable for external terminal module (MIL connector IDC40 to IDC20x2), 1 m (shield)
	UC-ET010-33B	I/O extension cable for external terminal module (DB37), 1 m
	UC-ET020-24B	I/O extension cable for external terminal module (MIL connector IDC40 to IDC40), 2 m (shield)
	UC-ET020-24D	I/O extension cable for external terminal module (MIL connector IDC40 to IDC20x2), 2 m (shield)
	UC-ET030-24B	I/O extension cable for external terminal module (MIL connector IDC40 to IDC40), 3 m (shield)
	UC-ET030-24D	I/O extension cable for external terminal module (MIL connector IDC40 to IDC20x2), 3 m (shield)

Type	Model	Purpose
	AHACAB06-5A	I/O extension cable for extension backplane, 0.6 m
	AHACAB10-5A	I/O extension cable for extension backplane, 1 m
	AHACAB15-5A	I/O extension cable for extension backplane, 1.5 m
	AHACAB30-5A	I/O extension cable for extension backplane, 3 m
	AHACAB50-5A	I/O extension cable for extension backplane, 5 m
	AHACABA0-5A	I/O extension cable for extension backplane, 10 m
	AHACABA5-5A	I/O extension cable for extension backplane, 15 m
	AHACABB0-5A	I/O extension cable for extension backplane, 20 m
	AHACABC0-5A	I/O extension cable for extension backplane, 30 m
	AHACABD0-5A	I/O extension cable for extension backplane, 40 m
	AHACABE0-5A	I/O extension cable for extension backplane, 50 m
	AHACABF0-5A	I/O extension cable for extension backplane, 60 m
	AHACABG0-5A	I/O extension cable for extension backplane, 70 m
	AHACABH0-5A	I/O extension cable for extension backplane, 80 m
	AHACABJ0-5A	I/O extension cable for extension backplane, 90 m
	AHACABK0-5A	I/O extension cable for extension backplane, 100 m
Motion control cables	UC-CMC003-01A	CANopen communication cable, 0.3 m
	UC-CMC005-01A	CANopen communication cable, 0.5 m
	UC-CMC010-01A	CANopen communication cable, 1 m
	UC-CMC015-01A	CANopen communication cable, 1.5 m
	UC-CMC020-01A	CANopen communication cable, 2 m
	UC-CMC030-01A	CANopen communication cable, 3 m
	UC-CMC050-01A	CANopen communication cable, 5 m
	UC-CMC100-01A	CANopen communication cable, 10 m
	UC-CMC200-01A	CANopen communication cable, 20 m
	UC-EMC003-02A	EtherCAT communication cable, 0.3 m
	UC-EMC005-02A	EtherCAT communication cable, 0.5 m
	UC-EMC010-02A	EtherCAT communication cable, 1 m
	UC-EMC020-02A	EtherCAT communication cable, 2 m

Type	Model	Purpose
	UC-EMC050-02A	EtherCAT communication cable, 5 m
	UC-EMC100-02A	EtherCAT communication cable, 10 m
	UC-EMC200-02A	EtherCAT communication cable, 20 m
	UC-EMC003-02B	EtherCAT communication cable, 0.3M
	UC-EMC005-02B	EtherCAT communication cable,0.5M
	UC-EMC010-02B	EtherCAT communication cable,1M
	UC-EMC020-02B	EtherCAT communication cable, 2M
	UC-EMC030-02B	EtherCAT communication cable, 3M
	UC-EMC050-02B	EtherCAT communication cable, 5M
	UC-EMC100-02B	EtherCAT communication cable,10M
Networking cables	UC-CMC003-01A	CANopen communication cable, 0.3 m
	UC-CMC005-01A	CANopen communication cable, 0.5 m
	UC-CMC010-01A	CANopen communication cable, 1 m
	UC-CMC015-01A	CANopen communication cable, 1.5 m
	UC-CMC020-01A	CANopen communication cable, 2 m
	UC-CMC030-01A	CANopen communication cable, 3 m
	UC-CMC050-01A	CANopen communication cable, 5 m
	UC-CMC100-01A	CANopen communication cable, 10 m
	UC-CMC200-01A	CANopen communication cable, 20 m
	UC-DN01Z-01A	DeviceNet communication cable, 305 m
	UC-DN01Z-02A	DeviceNet communication cable, 305 m
	UC-PF01Z-01A	PROFIBUS communication cable, 305 m
External terminal modules	UB-10-ID16A	External terminal module for digital input module(MIL connector)
	UB-10-ID32A	External terminal module for digital input module(MIL connector)
	UB-10-ID32B	External terminal module for digital input modules (DB37 connector)
	UB-10-OR16A	External terminal module for digital output modules (16-point relay output, MIL connector)
	UB-10-OR16B	External terminal module for digital output modules (16-point relay output, MIL connector)
	UB-10-OR32A	External terminal module for digital output modules (32-point relay output, DB37 connector)

Type	Model	Purpose
	UB-10-OR32B	External terminal module for digital output modules (32-point relay output, DB37 connector)
	UB-10-OT32A	External terminal module for digital output modules (transistor output, MIL connector)
	UB-10-OT32B	External terminal module for digital output modules (transistor output, DB37 connector)
	UB-10-IO16C	External terminal module for motion control modules (HDC)
	UB-10-IO22C	External terminal module for motion control modules (HDC)
	UB-10-IO24C	External terminal module for motion control modules (HDC)
	UB-10-IO34C	External terminal module for motion control modules (HDC)
Adapters/ connectors	TAP-CN01	DeviceNet/CANopen distribution Box, 1 to 2
	TAP-CN02	DeviceNet/CANopen distribution Box, 1 to 4
	TAP-CN03	DeviceNet/CANopen distribution Box, 1 to 4, RJ45 adapter
	TAP-CP01	Power supply distribution box
	UN-03EN-04A	RJ45 adapter
	UN-03PF-01A	PROFIBUS connector
	UN-03PF-02A	PROFIBUS connector
	UN-03PF-03A	PROFIBUS connector
Terminators	TAP-TR01	Terminator, 121 Ω
	TAP-TR02	Terminator, 150 Ω

MEMO

B

Appendix B USB Driver

Table of Contents

B.1 Installing the UC-PRG020-12A/IFD6500 Driver B-2

B.1 Installing the UC-PRG020-12A/IFD6500 Driver

Double-click the executable file CP210xVCPInstaller_x86.exe or CP210xVCPInstaller_x64.exe, and then follow the steps below. (If a 32-bit Windows operating system is used, CP210xVCPInstaller_x86.exe should be double-clicked. If a 64-bit Windows operating system is used, CP210xVCPInstaller_x64.exe should be double-clicked.)

Please download the UC-PRG020-12A/IFD6500 driver from the official website of Delta (http://www.deltaww.com/).

Step 1

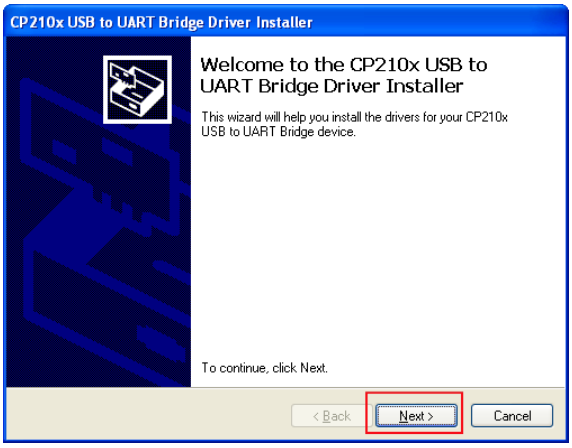

Step 2

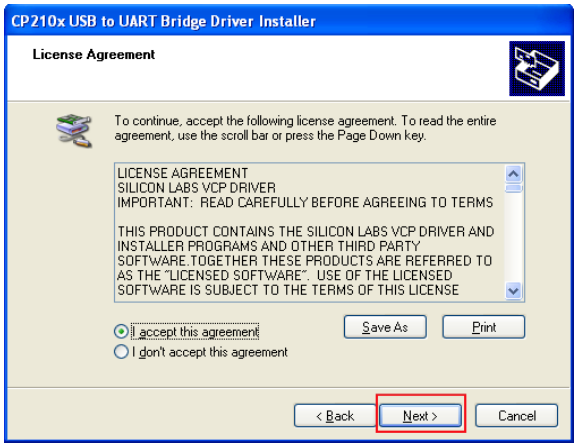

Step 3

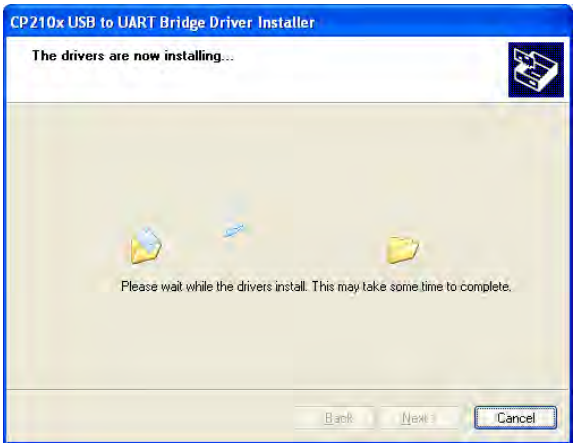

Step 4

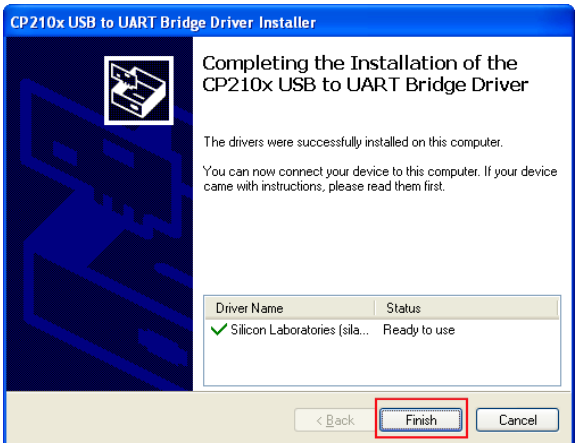

Step 5

After UC-PRG020-12A/IFD6500 is connected to the computer, **Silicon Labs CP210x USB to UART Bridge (COMx)** will appear in the **Device Manager** window. **COMx** represents the communication port connected to UC-PRG020-12A/IFD6500.