MATERIAL NUMBER	OLD PART NUMBER	COUPLING NUT MATERIAL	COUPLING NUT FINISH
1300170015	1A4000-34	BRASS	NICKEL PLATED
1300170016	1A4000-348	STAINLESS STEEL	PASSIVATED

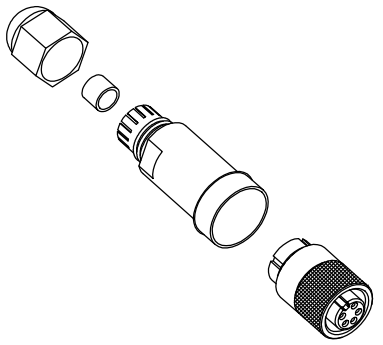

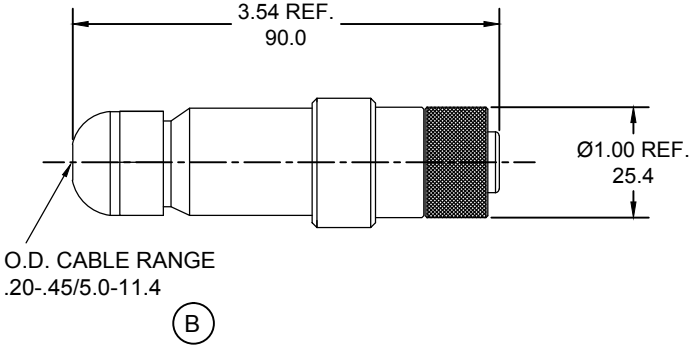

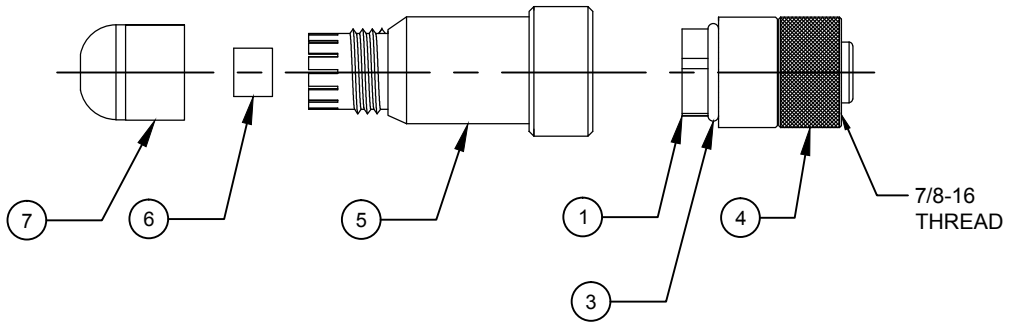

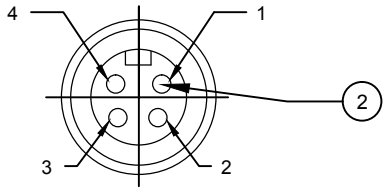

FEMALE FACE VIEW

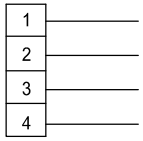

WIRING CHART

B

VOLTAGE RATING	600VAC/VDC
AMPERAGE RATING	16AWG: 13 AMPS 18AWG: 8 AMPS
PROTECTION	IP67
OPERATING TEMPERATURE	-20°C TO 80°C
CSA CERTIFICATIONS	CSA CERTIFIED, FILE NO. LR6837

ITEM	COMPONENT	MATERIAL	FINISH
1	INSERT	NYLON	BLACK
2	CONTACTS	COPPER ALLOY	GOLD PLATED
3	O-RING	NITRILE	BLACK
4	COUPLING NUT	SEE CHART	SEE CHART
5	MOLDED BODY	NYLON	BLACK
6	GROMMET	NITRILE	BLACK
7	CORD GRIP BODY	NYLON	BLACK

CABLE OD RANGE WAS .20-.48, REDRAWN
EC NO: IPG2013-1684 2013/05/09
DRWN: RSTONE
CHKD: BW
APPR: BWOODMAN
DESCRIPTION

B
REV

QUALITY SYMBOLS
▼=0
Ⓒ=0

GENERAL TOLERANCES (UNLESS SPECIFIED)

	mm	INCH
4 PLACES	±---	±---
3 PLACES	±---	±---
2 PLACES	±---	±.01
1 PLACE	±0.3	±---
ANGULAR ±---°		

DRAFT WHERE APPLICABLE MUST REMAIN WITHIN DIMENSIONS

DIMENSION STYLE: IN/MM
SCALE: ---
DESIGN UNITS: INCH
THIRD ANGLE PROJECTION

DRAWN BY: RSTONE DATE: 2013/05/09
CHECKED BY: BW DATE: 2013/05/14
APPROVED BY: --- DATE: ---

TITLE: MC FIELD ATTACHABLE 4P .20-.45 OD CABLE RANGE ----

MOLEX INCORPORATED

MATERIAL NO.: SEE CHART
DOCUMENT NO.: SD-130017-003
SHEET NO.: 1 OF 1

SIZE A

THIS DRAWING CONTAINS INFORMATION THAT IS PROPRIETARY TO MOLEX INCORPORATED AND SHOULD NOT BE USED WITHOUT WRITTEN PERMISSION