Für diese Unterlage behalten wir uns alle Rechte vor, auch für den Fall der Patenterteilung oder Gebrauchsmustereintragung. Sie darf ohne unsere vorherige schriftliche Zustimmung weder vervielfältigt noch sonstwie benutzt, noch Dritten zugänglich gemacht werden.

Nur rot gestempelte oder auf Laufkarte gedruckte Dokumente unterliegen dem Änderungsdienst und sind zur Fertigung freigegeben.
Only red stamped or on jobcard printed documents are managed. These documents are approved for production.

All Rights reserved, including possible patents or trademarks. Documents shall not be provided to a third party or duplicated in any form without prior written permission.

Additional coding
View in direction A

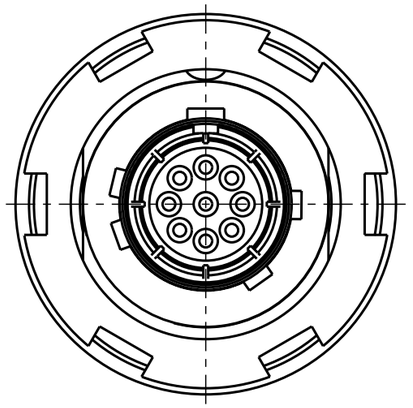

G80YBR-P09UC00-000L
Mechanical coding: B
Color Coding: red

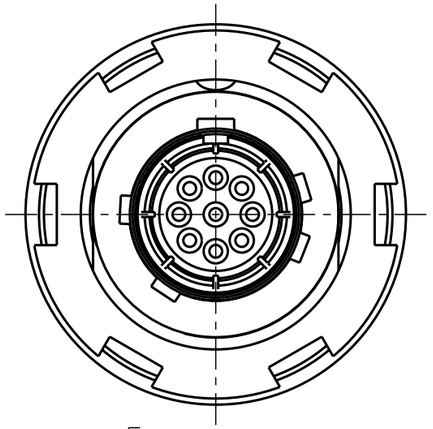

G80YCR-P09UC00-000L
Mechanical coding: C
Color Coding: blue

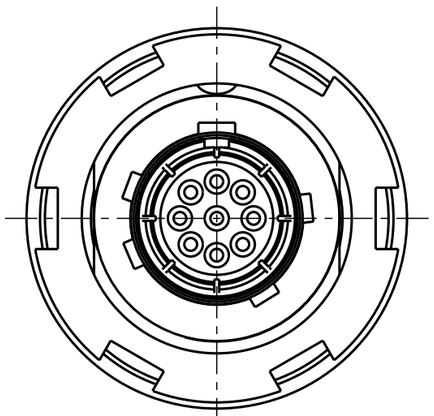

G80YDR-P09UC00-000L
Mechanical coding: D
Color Coding: green

Panel cut-out

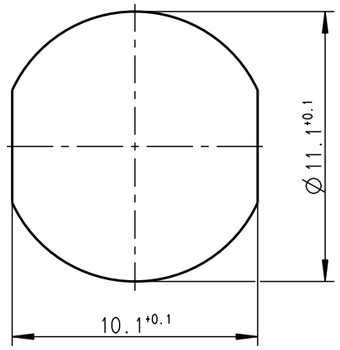

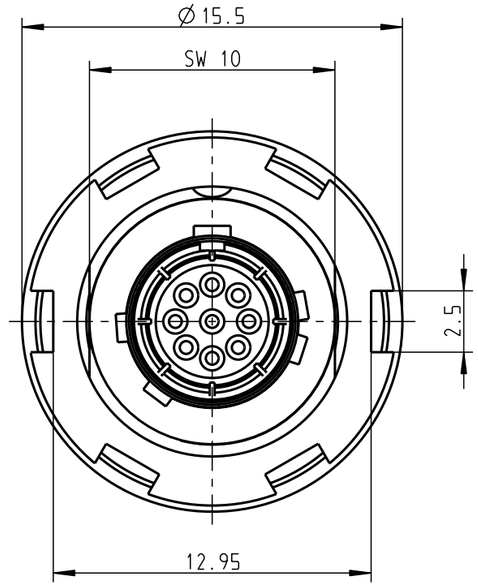

G80YAR-P09UC00-000L
Mechanical coding: A
Color Coding: light brown

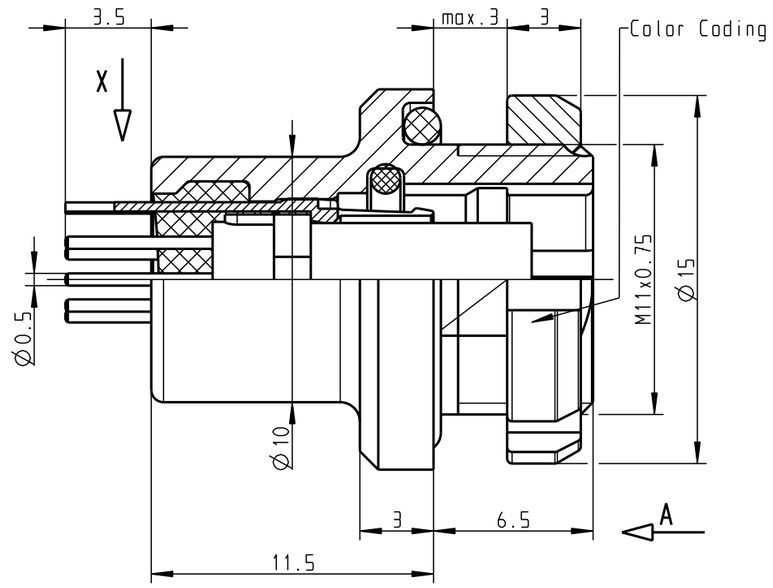

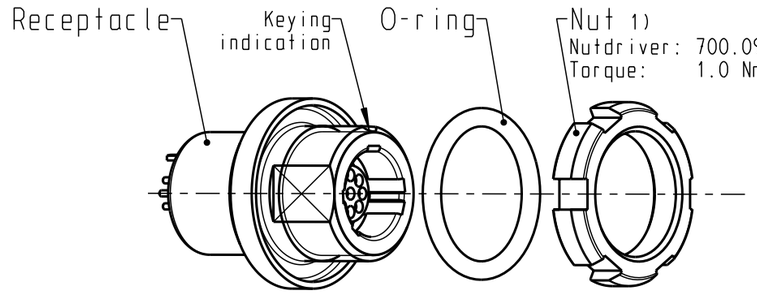

Delivery condition
2:1

X
Solder area
Earth tag

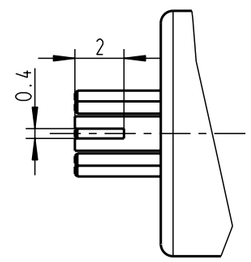

PCB-Layout
View in mating direction A
8:1

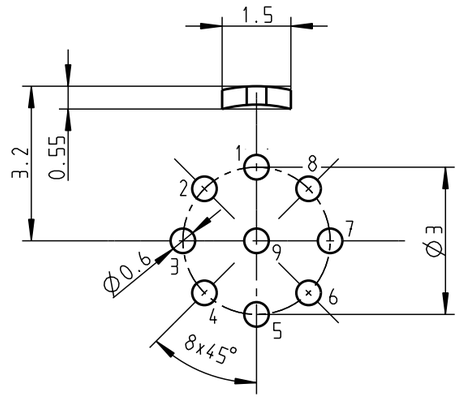

Technical information

- Print contacts:
- Current load: 5A@Δt40° (Single contact)
  3.25A@Δt40° (Insert)
- Test voltage: 600V (acc. SAE AS 13441:1998,Contact to contact)
- Rated voltage: 200V (acc. SAE AS 13441:1998) 2)

- For more technical information and accessories see catalogue (www.odu.de/amc)

1) ODU recommend an additional locking of the nut with adhesive (e.g. Loctite 2701) to the screw thread.

2) Maximal operating voltage at sea level up to 2.000m. Rated voltage applies no other electrical safety standard. In case other standards rule a specific use of the connector, the application specific safety criteria shall be considered first. This must be evaluated in the frame of equipment engineering.

All shown connectors are according to DIN EN 61984:2009 connectors without breaking capacity (COC)!

index	notice	date	name

2011	date	name
prep.	27.12.	Weigand
app.		
norm.		

otto dunkel gmbh

PE-modell-nr.:
CAD-nr.: 00051399
sheet.:

designation: Receptacle style 8
AMC Standard Version

scale: 4:1

drawing nr.: G80Y.R-P09UC00-000L

replacement for:

copy nr.

CAD: Pro/ENGINEER