PART NAME	IP67 SERIES NEMA DIE CAST ALUMINUM BOX	PART No.	IPS-3917	REVISION DATE	1/21/2011

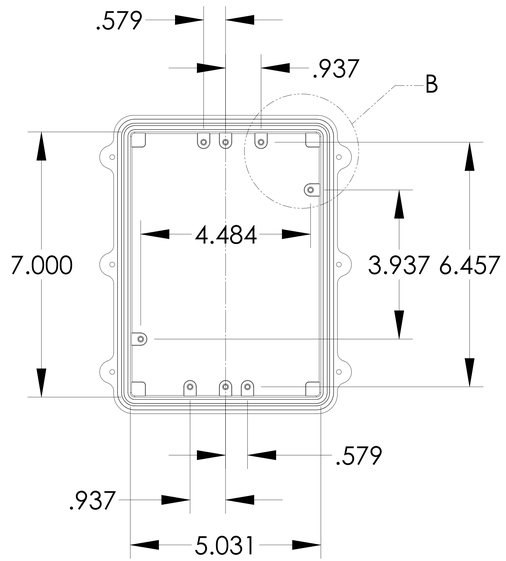

INSIDE BODY DETAILS

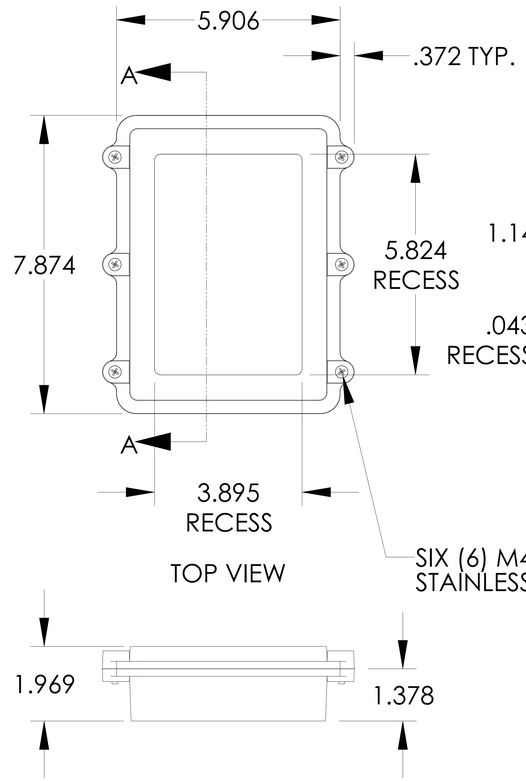

TOP VIEW

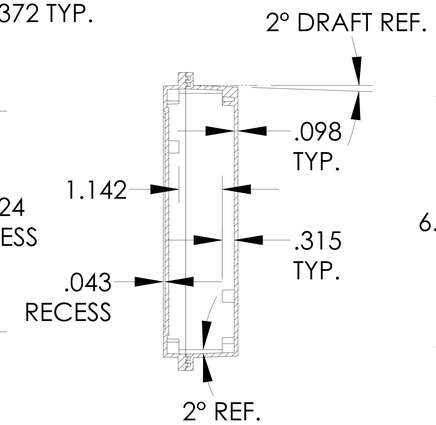

SECTION A-A

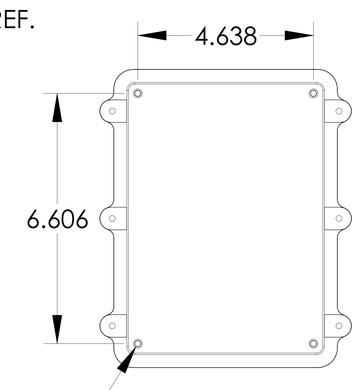

BOTTOM VIEW

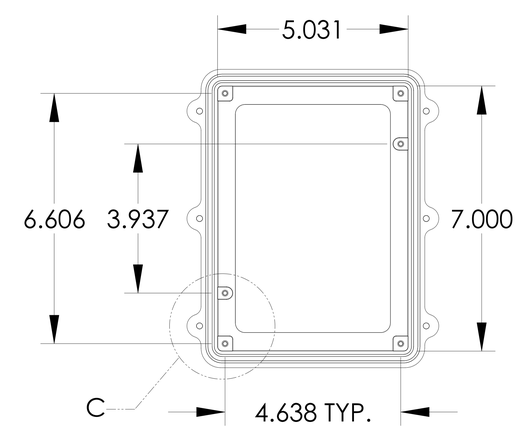

INSIDE COVER DETAILS

SIX (6) M4x0.7 PITCH x 20mm (.787") LG.
STAINLESS STEEL CAPTIVE SCREWS

∅.175 x .315 DEEP BLIND HOLE (4x)
{ACCEPTS M5 x 10mm (.394") LG.
SELF-TAPPING SCREWS (NOT SUPPLIED)}

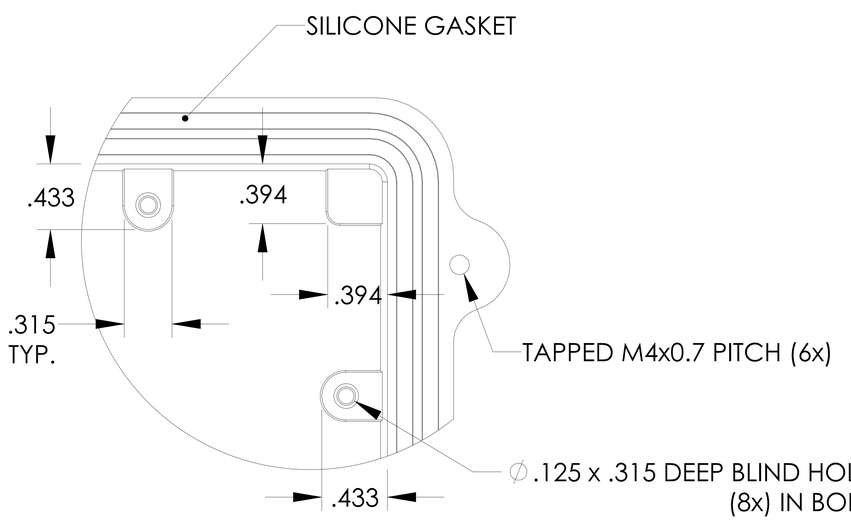

∅.125 x .315 DEEP BLIND HOLE
(8x) IN BODY
(6x) IN COVER
{ACCEPTS M3.5 x 6mm (.236") LG.
SELF-TAPPING SCREWS (NOT SUPPLIED)}

DETAIL B
SCALE 4 : 1

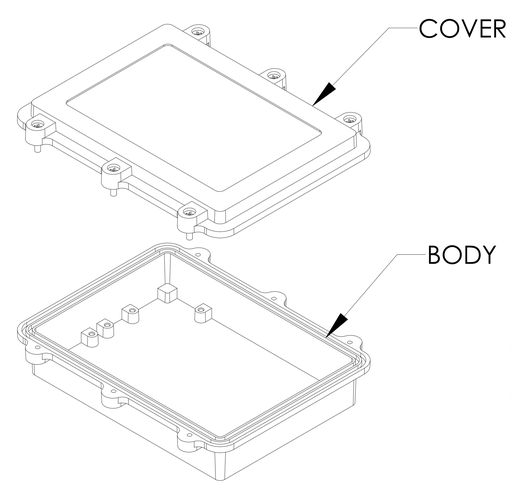

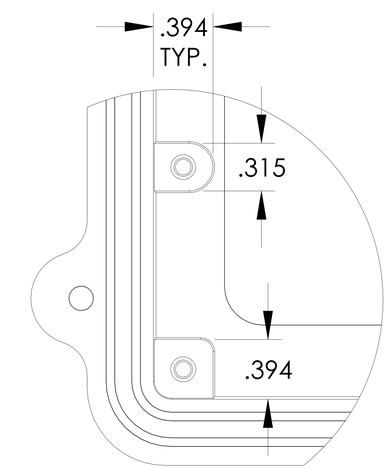

DETAIL C
SCALE 4 : 1

MEETS NEMA 1, 2, 4, 4X, 12, 13 AND IP67 RATINGS

MATERIAL - ALUMINUM ALLOY ADC-12

FINISH - NATURAL

TOLERANCES: ALL HOLE DIAMETERS ±.005
ALL OTHER DIMENSIONS ±.015