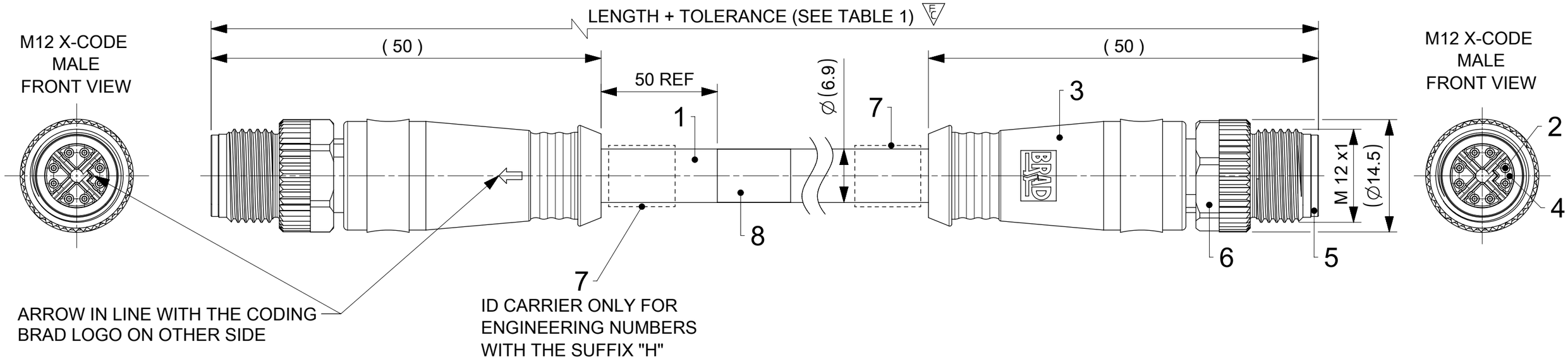


WIRING DIAGRAM

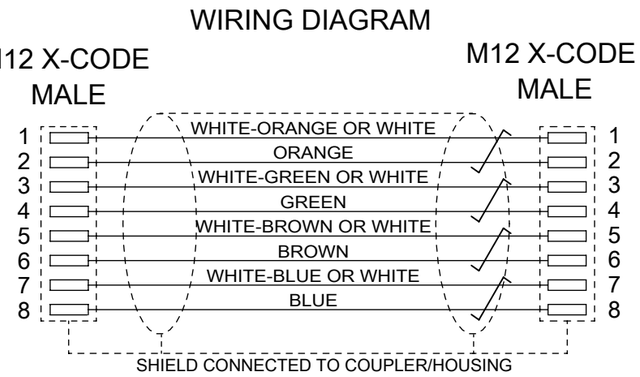


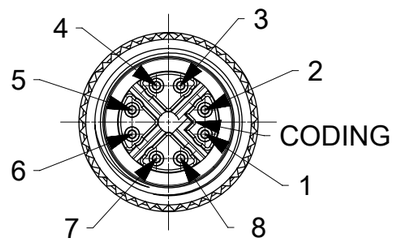


NOTES:
VOLTAGE RATING: 48 V
CURRENT RATING: 0.5 A
TEMPERATURE RATING:
STATIC: -40 °C TO 80 °C
DYNAMIC: -20 °C TO 80 °C
IP RATING: IP 67 (IN MATED AND LOCKED CONDITION)
TRANSMISSION CHARACTERISTICS ACCORDING TO ISO/IEC 11801 CLASS EA CHANNEL,
WITH INSERTION LOSS BEING IGNORED FOR CABLE LENGTHS ∠ 1 m OR ∟ 65 m
PACKAGING: CORDSETS ARE PACKED IN A POLYBAG

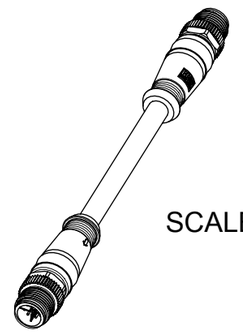

SCALE 1:2

BILL OF MATERIAL

| ITEM | QTY | DESCRIPTION | MATERIAL | FINISH/COLOR |
|---|---|---|---|---|
| 1 | 1 | CABLE | PUR | GREEN |
| 2 | 16 | CONTACT 6 MALE | BRASS | Au OVER Ni |
| 3 | - | MOLDING MATERIAL | TPU | BLACK |
| 4 | 2 | INSERT M12 CAT6A MALE 8P | PA6 | BLACK |
| 5 | 2 | SHELL M12 CAT6A | ZINC DIE-CAST | Ni PLATED |
| 6 | 2 | NUT M12 MALE | BRASS | Ni PLATED |
| 7 | 2 | I/D CARRIER | PVC | TRANSPARENT |
| 8 | 1 | LABEL 2.0X1.75 | VINYL | YELLOW |

DOCUMENT STATUS | P1 | RELEASE DATE | 2022/01/25 10:26:18

THIS DRAWING CONTAINS INFORMATION THAT IS PROPRIETARY TO MOLEX ELECTRONIC TECHNOLOGIES, LLC AND SHOULD NOT BE USED WITHOUT WRITTEN PERMISSION

FUNCTIONAL SYMBOLS: EA = 0, EC = 1, ED = 0
DIVISIONAL SYMBOLS

DIMENSION UNITS: mm | SCALE: 2:1

GENERAL TOLERANCES (UNLESS SPECIFIED)

| | |
|---|---|
| ANGULAR TOL | ± 1.0 ° |
| 4 PLACES | ± |
| 3 PLACES | ± |
| 2 PLACES | ± 0.05 |
| 1 PLACE | ± 0.3 |
| 0 PLACES | ± 0.5 |

DRAFT WHERE APPLICABLE MUST REMAIN WITHIN DIMENSIONS

CURRENT REV DESC: NOTE CHANGED

EC NO: 692351
DRWN: HDUERRWANG 2022/01/17
CHK'D: RSILLER 2022/01/25
APPR: RSILLER 2022/01/25

INITIAL REVISION:
DRWN: FGAIK 2017/06/19
APPR: BBRAUCH 2017/06/21

THIRD ANGLE PROJECTION | DRAWING: A3-SIZE | SERIES: 120341

molex

CSE M12 CAT6A 8P XC MA STR PUR XM DE

PRODUCT CUSTOMER DRAWING

| DOCUMENT NUMBER | DOC TYPE | DOC PART | REVISION |
|---|---|---|---|
| 1203410300 | PSD | 000 | A8 |

| MATERIAL NUMBER | CUSTOMER | SHEET NUMBER |
|---|---|---|
| SEE TABLE 1 | GENERAL MARKET | 1 OF 2 |

FORMAT: master_Sheet-A3
REVISION: J
DATE: 2020/01/14

TABLE 1

| MOLEX PN | ENGINEERING NO. | DESCRIPTION | LENGTH [mm] |
|---|---|---|---|
| 1203410312 | E22E06020C250 | M12 CAT6A M/M ST/ST PUR GREEN 0.25M | 250 |
| 1203410300 | E22E06020M005 | M12 CAT6A M/M ST/ST PUR GREEN 0.5M | 500 |
| 1203410301 | E22E06020M010 | M12 CAT6A M/M ST/ST PUR GREEN 1M | 1000 |
| 1203410313 | E22E06020M015 | M12 CAT6A M/M ST/ST PUR GREEN 1.5M | 1500 |
| 1203410302 | E22E06020M020 | M12 CAT6A M/M ST/ST PUR GREEN 2M | 2000 |
| 1203410303 | E22E06020M030 | M12 CAT6A M/M ST/ST PUR GREEN 3M | 3000 |
| 1203410304 | E22E06020M040 | M12 CAT6A M/M ST/ST PUR GREEN 4M | 4000 |
| 1203410305 | E22E06020M050 | M12 CAT6A M/M ST/ST PUR GREEN 5M | 5000 |
| 1203410859 | E22E06020M070 | M12 CAT6A M/M ST/ST PUR GREEN 7M | 7000 |
| 1203410374 | E22E06020M080 | M12 CAT6A M/M ST/ST PUR GREEN 8M | 8000 |
| 1203410306 | E22E06020M100 | M12 CAT6A M/M ST/ST PUR GREEN 10M | 10000 |
| 1203410375 | E22E06020M120 | M12 CAT6A M/M ST/ST PUR GREEN 12M | 12000 |
| 1203410307 | E22E06020M150 | M12 CAT6A M/M ST/ST PUR GREEN 15M | 15000 |
| 1203410376 | E22E06020M180 | M12 CAT6A M/M ST/ST PUR GREEN 18M | 18000 |
| 1203410308 | E22E06020M200 | M12 CAT6A M/M ST/ST PUR GREEN 20M | 20000 |
| 1203410377 | E22E06020M220 | M12 CAT6A M/M ST/ST PUR GREEN 22M | 22000 |
| 1203410311 | E22E06020M250 | M12 CAT6A M/M ST/ST PUR GREEN 25M | 25000 |
| 1203410309 | E22E06020M300 | M12 CAT6A M/M ST/ST PUR GREEN 30M | 30000 |
| 1203410823 | E22E06020M340 | M12 CAT6A M/M ST/ST PUR GREEN 34M | 34000 |
| 1203410378 | E22E06020M350 | M12 CAT6A M/M ST/ST PUR GREEN 35M | 35000 |
| 1203410310 | E22E06020M400 | M12 CAT6A M/M ST/ST PUR GREEN 40M | 40000 |
| 1203410379 | E22E06020M450 | M12 CAT6A M/M ST/ST PUR GREEN 45M | 45000 |
| 1203410371 | E22E06020M500 | M12 CAT6A M/M ST/ST PUR GREEN 50M | 50000 |
| 1203410380 | E22E06020M550 | M12 CAT6A M/M ST/ST PUR GREEN 55M | 55000 |
| 1203410372 | E22E06020M600 | M12 CAT6A M/M ST/ST PUR GREEN 60M | 60000 |
| 1203410381 | E22E06020M650 | M12 CAT6A M/M ST/ST PUR GREEN 65M | 65000 |
| 1203410373 | E22E06020M700 | M12 CAT6A M/M ST/ST PUR GREEN 70M | 70000 |
| 1203410847 | E22E06020M800 | M12 CAT6A M/M ST/ST PUR GREEN 80M | 80000 |
| WITH ID CARRIER | | | |
| 1203410385 | E22E06020M005H | M12 CAT6A M/M ST/ST PUR GREEN 0.5M-ID | 500 |
| 1203410386 | E22E06020M010H | M12 CAT6A M/M ST/ST PUR GREEN 1M-ID | 1000 |
| 1203410396 | E22E06020M015H | M12 CAT6A M/M ST/ST PUR GREEN 1.5M-ID | 1500 |
| 1203410387 | E22E06020M020H | M12 CAT6A M/M ST/ST PUR GREEN 2M-ID | 2000 |
| 1203410388 | E22E06020M030H | M12 CAT6A M/M ST/ST PUR GREEN 3M-ID | 3000 |
| 1203410389 | E22E06020M040H | M12 CAT6A M/M ST/ST PUR GREEN 4M-ID | 4000 |
| 1203410390 | E22E06020M050H | M12 CAT6A M/M ST/ST PUR GREEN 5M-ID | 5000 |
| 1203410391 | E22E06020M100H | M12 CAT6A M/M ST/ST PUR GREEN 10M-ID | 10000 |
| 1203410392 | E22E06020M150H | M12 CAT6A M/M ST/ST PUR GREEN 15M-ID | 15000 |
| 1203410393 | E22E06020M200H | M12 CAT6A M/M ST/ST PUR GREEN 20M-ID | 20000 |
| 1203410922 | E22E06020M250H | M12 CAT6A M/M ST/ST PUR GREEN 25M-ID | 25000 |
| 1203410394 | E22E06020M300H | M12 CAT6A M/M ST/ST PUR GREEN 30M-ID | 30000 |
| 1203410923 | E22E06020M350H | M12 CAT6A M/M ST/ST PUR GREEN 35M-ID | 35000 |
| 1203410395 | E22E06020M400H | M12 CAT6A M/M ST/ST PUR GREEN 40M-ID | 40000 |
| 1203410984 | E22E06020M450H | M12 CAT6A M/M ST/ST PUR GREEN 45M-ID | 45000 |
| 1203410397 | E22E06020M500H | M12 CAT6A M/M ST/ST PUR GREEN 50M-ID | 50000 |
| 1203410985 | E22E06020M550H | M12 CAT6A M/M ST/ST PUR GREEN 55M-ID | 55000 |
| 1203410398 | E22E06020M600H | M12 CAT6A M/M ST/ST PUR GREEN 60M-ID | 60000 |
| 1203410986 | E22E06020M650H | M12 CAT6A M/M ST/ST PUR GREEN 65M-ID | 65000 |
| 1203410399 | E22E06020M700H | M12 CAT6A M/M ST/ST PUR GREEN 70M-ID | 70000 |
| 1203410987 | E22E06020M750H | M12 CAT6A M/M ST/ST PUR GREEN 75M-ID | 75000 |
| 1203410988 | E22E06020M850H | M12 CAT6A M/M ST/ST PUR GREEN 85M-ID | 85000 |

CABLE LENGTH TOLERANCES

| LENGTH | TOLERANCE |
|---|---|
| 0 m - 1 m | +40 mm |
| >1 m - 5 m | +60 mm |
| >5 m - 10 m | +80 mm |
| >10 m - 20 m | +140 mm |
| >20 m - 30 m | +160 mm |
| >30 m | +1% length |

| DOCUMENT STATUS | P1 | RELEASE DATE | 2022/01/25 10:26:18 |
|---|---|---|---|

FORMAT: master-shared-A3
REVISION: J
DATE: 2020/01/16

FUNCTIONAL SYMBOLS
FA = 0
FC = 0
FP = 0
DIVISIONAL SYMBOLS

THIS DRAWING CONTAINS INFORMATION THAT IS PROPRIETARY TO MOLEX ELECTRONIC TECHNOLOGIES, LLC AND SHOULD NOT BE USED WITHOUT WRITTEN PERMISSION

| DIMENSION UNITS | SCALE |
|---|---|
| mm | 1:1 |

GENERAL TOLERANCES (UNLESS SPECIFIED)

| | | |
|---|---|---|
| ANGULAR TOL | ± | 1.0 ° |
| 4 PLACES | ± | |
| 3 PLACES | ± | |
| 2 PLACES | ± | 0.05 |
| 1 PLACE | ± | 0.3 |
| 0 PLACES | ± | 0.5 |

DRAFT WHERE APPLICABLE MUST REMAIN WITHIN DIMENSIONS

CURRENT REV DESC: NOTE CHANGED

EC NO: 692351
DRWN: HDUERRWANG 2022/01/17
CHK'D: RSILLER 2022/01/25
APPR: RSILLER 2022/01/25

INITIAL REVISION:
DRWN: FGAIK 2017/06/19
APPR: BBRAUCH 2017/06/21

THIRD ANGLE PROJECTION | DRAWING: A3-SIZE | SERIES: 120341

molex

CSE M12 CAT6A 8P XC MA STR PUR XM DE

PRODUCT CUSTOMER DRAWING

| DOCUMENT NUMBER | DOC TYPE | DOC PART | REVISION |
|---|---|---|---|
| 1203410300 | PSD | 000 | A8 |

| MATERIAL NUMBER | CUSTOMER | SHEET NUMBER |
|---|---|---|
| SEE TABLE 1 | GENERAL MARKET | 2 OF 2 |