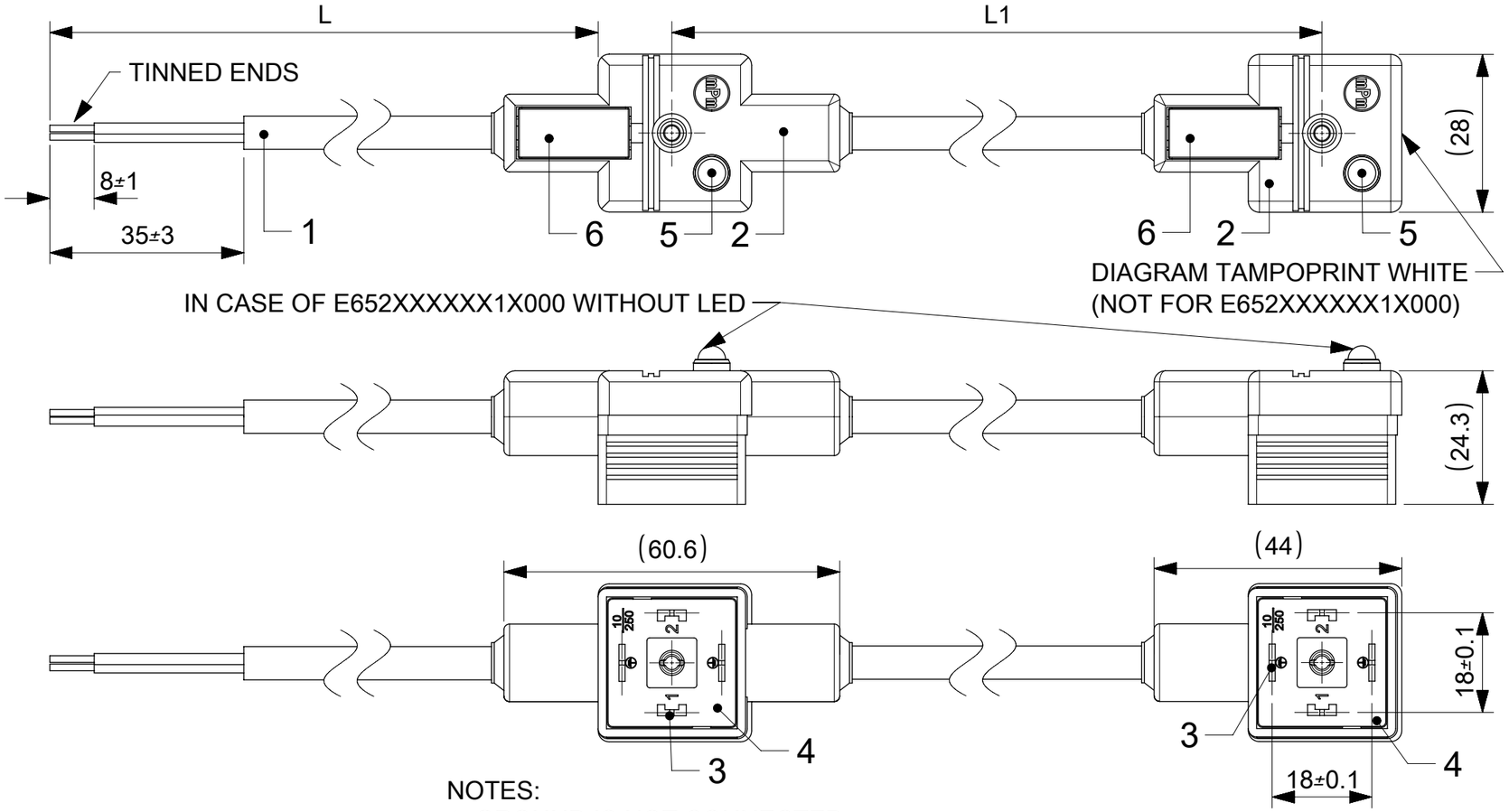

NOTES:
1. GROUND IS NOT CONNECTED

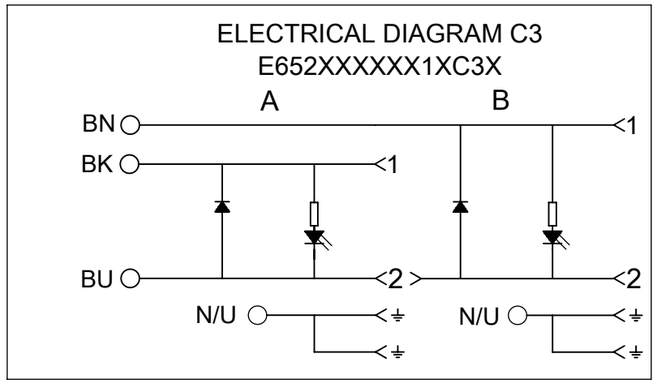

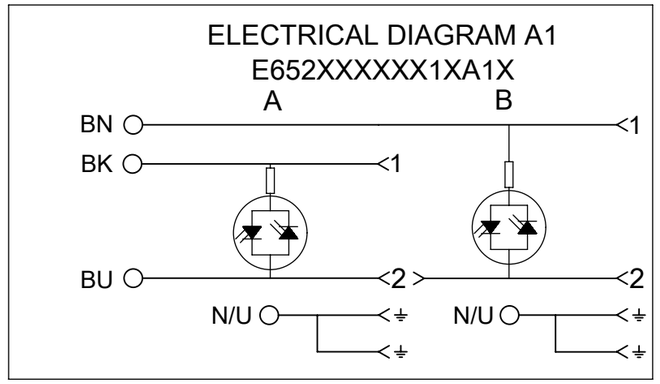

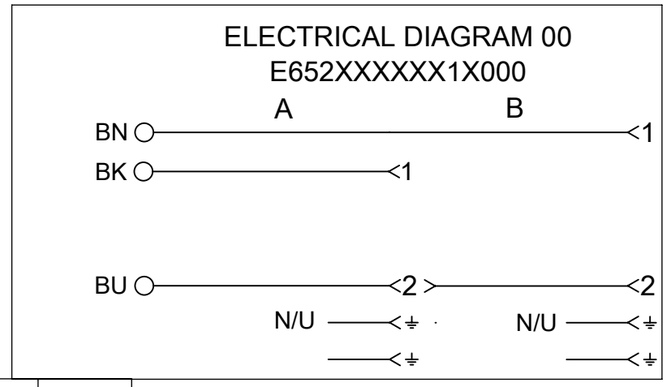

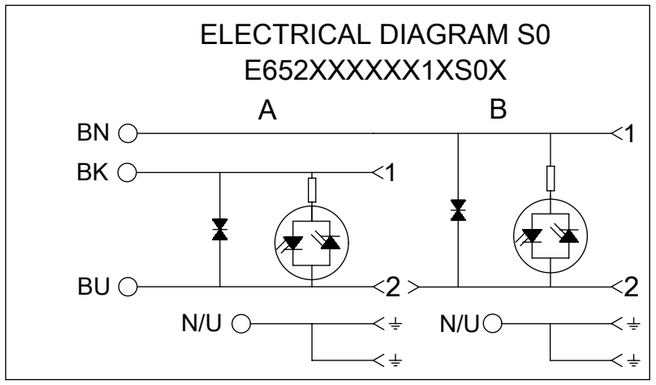

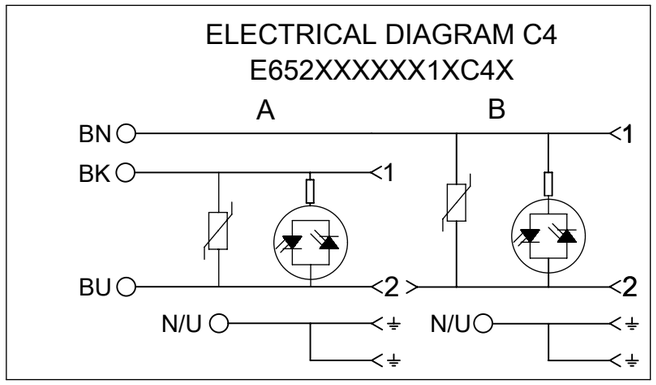

TABLE OF LENGHT TOLERANCES		
OVER	UP TO AND INCLUDING	TOLERANCE
0	500	-10/+20
500	1000	±20
1000	3000	±30
3000	5000	±40
5000	10000	±50
10000	15000	±100
15000	20000	±150
20000		±L/100

BILL OF MATERIALS

ITEM	QTY.	DESCRIPTION	MATERIAL	FINISH
12	0/2	INTEGRATED GASKET	NBR	-
11	0/2	WASHER	NBR	-
10	0/2	SCREW M3x27	STEEL	ZINC
9	0/2	FLAT GASKET	NBR/SILICONE	-
8	0/2	PROFILE GASKET	NBR/SILICONE	-
7	0/2	SCREW M3x25	STEEL	ZINC
6	2	LABEL WHITE	ABS	-
5	0/2	PCB	-	-
4	2	INSERT DIN A	PA66+25%G V0	-
3	8	CONTACT DIN	BRASS	SILVER
2	-	MOULDING MATERIAL	PP	-
1	-	CABLE (SEE SHEET 3)	-	-

DOCUMENT STATUS	P1	RELEASE DATE	2020/09/04 13:21:28

NOTES :

ELECTRICAL - CURRENT : MAX. 5.0A
CONTACT RESISTANCE : ≤15 milliohms MAX.
INSULATION RESISTANCE : 100 Megaohms MIN.

PHYSICAL - OPERATING TEMPERATURE WITH :
NITRILE RUBBER (NBR) GASKET : -40°C TO +90°C
LIVE CONTACT DISTANCE :
FORM A - 18.00mm

ENVIRONMENTAL - IP65 SEALING PROTECTION(FIXING SCREW)

THIS DRAWING CONTAINS INFORMATION THAT IS PROPRIETARY TO MOLEX ELECTRONIC TECHNOLOGIES, LLC AND SHOULD NOT BE USED WITHOUT WRITTEN PERMISSION

FUNCTIONAL SYMBOLS: FA = 0, FC = 0, FD = 0
DIVISIONAL SYMBOLS

DIMENSION UNITS	SCALE
mm	1:1

GENERAL TOLERANCES (UNLESS SPECIFIED)

ANGULAR TOL	±	1.0 °
4 PLACES	±	
3 PLACES	±	
2 PLACES	±	0.05
1 PLACE	±	0.3
0 PLACES	±	0.5

DRAFT WHERE APPLICABLE MUST REMAIN WITHIN DIMENSIONS

CURRENT REV DESC: TOL. TABLE UPDATED

EC NO: 642619
DRWN: SSM 2020/07/20
CHK'D: RSILLER 2020/09/04
APPR: RSILLER 2020/09/04

INITIAL REVISION:
DRWN: APAWLAK01 2017/07/03
APPR: MIWASIECZKO 2017/07/05

THIRD ANGLE PROJECTION | DRAWING: A3-SIZE | SERIES: 121055

molex

STANDARD E652 DIN FORM A DUAL

PRODUCT CUSTOMER DRAWING

DOCUMENT NUMBER	DOC TYPE	DOC PART	REVISION
1210550123	PSD	000	A1

MATERIAL NUMBER	CUSTOMER	SHEET NUMBER
SEE SHEET 3	GENERAL MARKET	1 OF 3

FORMAT: master_Sheet-A3
REVISION: J
DATE: 2020/01/14

ENGINEERING NO. - NUMERICAL CODE (Available parts see PART LIST table. Others on request).

E652 XX XXXX 1 XXXX

- **E** — E - Packing withaut bags; W - Single packing; Q - Quick packing
- **XX** — Cable type: See Table 1
- **XX** — Cable Cross Section Aera: See Table 1
- **XXXX** — Head Color: G=Grey; N=Black; T=Transparent; A=CSA-UL Black; B=CSA-UL Grey
- **XXXX** — Cable Lenght in Meters (L): A=1; B=1.5; C=2; D=2.5; E=3; F=3.5; G=4; H=4.5; L=5; M=5.5; N=6; P=6.5; Q=7; R=7.5; S=8; T=8.5; U=9; K=10
- **XXXX** — Cable Lenght in cm Betewen 2 Mouldings (L1) Eg.: 15=15 cm; 30=30 cm; 1K=100 cm; min lenght=13 cm
- **1** — Earth PIN Location: 1=Double Earth on 6H and 12H
- **XXXX** — Internal Circuit Wiring Configuration Eg.: C4, 00, S0 See Sheet 1
- **XXXX** — Voltage and LED Color:
  - RED LED: 1= 12V; 2= 24V; 3= 48V; 4= 115V; 5= 230V
  - GREEN LED: A= 12V; B= 24V; C= 48V; D= 115V; E= 230V
  - YELLOW LED: G= 12V; H= 24V; K= 48V; L= 115V; M= 230V

Type of Gasket and Screw:
- 1=NBR Profile Gasket + Fixing Screw (M3x25 mm)
- 2=NBR Flat Gasket + Fixing Screw (M3x25 mm)
- 3=Silicone Profile Gasket + Fixing Screw (M3x25 mm)
- 4=Silicone Flat Gasket + Fixing Screw (M3x25 mm)
- P=Integrated Gasket Assembled + Fixing Screw with Washer Assembled (M3x27 mm)
- R=Integrated Gasket + Fixing Screw + Washer (M3x27 mm)
- T=Profile Gasket + Fixing Screw + Washer (M3x27 mm)

Profile Gasket + Screw with Washer M3x27 mm

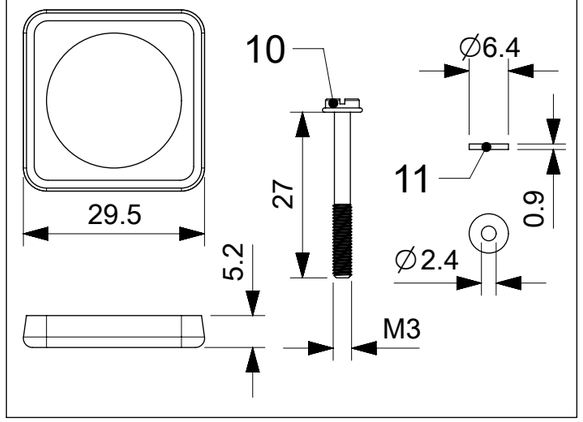

Integrated Gasket + Screw with Washer M3x27 mm

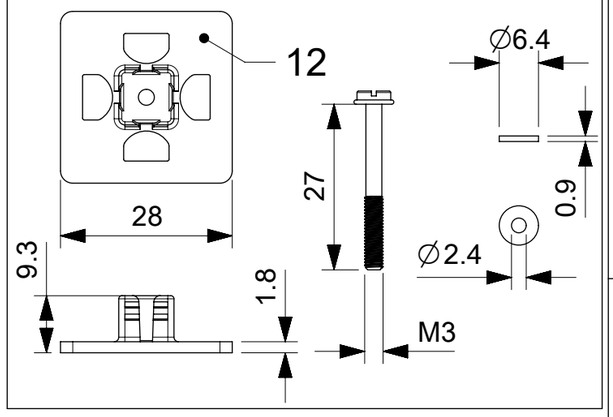

Profile Gasket + Screw M3x25 mm

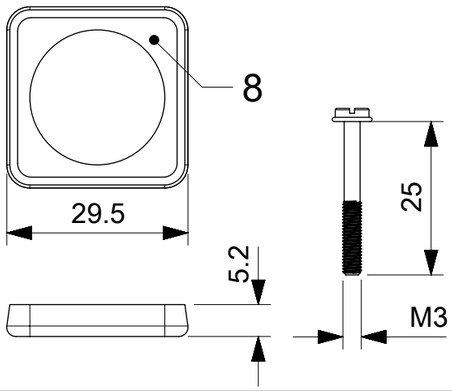

Flat Gasket + Screw M3x25 mm

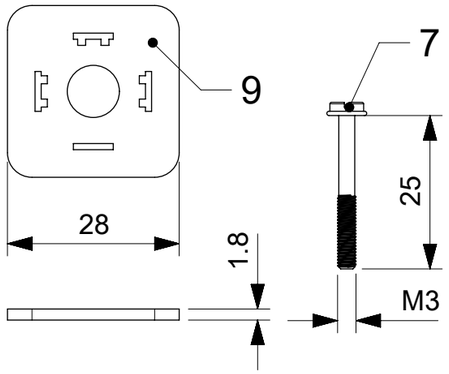

THIS DRAWING CONTAINS INFORMATION THAT IS PROPRIETARY TO MOLEX ELECTRONIC TECHNOLOGIES, LLC AND SHOULD NOT BE USED WITHOUT WRITTEN PERMISSION

FUNCTIONAL SYMBOLS	DIMENSION UNITS: mm	SCALE: 1:1
	GENERAL TOLERANCES (UNLESS SPECIFIED)	
	ANGULAR TOL ± 1.0 °	
	4 PLACES ±	
	3 PLACES ±	
	2 PLACES ± 0.05	
	1 PLACE ± 0.3	
	0 PLACES ± 0.5	
DIVISIONAL SYMBOLS	DRAFT WHERE APPLICABLE MUST REMAIN WITHIN DIMENSIONS	

CURRENT REV DESC: TOL. TABLE UPDATED

EC NO: 642619
DRWN: SSM 2020/07/20
CHK'D: RSILLER 2020/09/04
APPR: RSILLER 2020/09/04

INITIAL REVISION:
DRWN: APAWLAK01 2017/07/03
APPR: MIWASIECZKO 2017/07/05

THIRD ANGLE PROJECTION | DRAWING: A3-SIZE | SERIES: 121055

molex

STANDARD E652 DIN FORM A DUAL

PRODUCT CUSTOMER DRAWING

DOCUMENT NUMBER	DOC TYPE	DOC PART	REVISION
1210550123	PSD	000	A1

MATERIAL NUMBER	CUSTOMER	SHEET NUMBER
SEE SHEET 3	GENERAL MARKET	2 OF 3

DOCUMENT STATUS	P1	RELEASE DATE	2020/09/04 13:21:28

FORMAT: master-tb-prod-A3
REVISION: J
DATE: 2020/01/14

TABLE 1 - CABLES

Molex PN	mPm	Code	Wires	Cross Section	Material	Colour	Diameter ∅
1210180080	I	0	3	1 mm²	PVC CEI 2022 II O.R.	Grey RAL7035	6.4±0.2 mm
1210180467	A	2	2	20 AWG	PVC CSA/UL 2661	Black	5.4±0.2 mm
1210180128	A	2	3	20 AWG	PVC CSA/UL 2661	Black	5.6±0.2 mm
1210180394	A	2	4	20 AWG	PVC CSA/UL 2661	Black	6.2±0.25 mm
-	A	2	5	20 AWG	PVC CSA/UL 2661	Black	7±0.2 mm
1210180297	B	2	2	20 AWG	PUR CSA/UL 20668	Black	5.6±0.2 mm
1210180126	B	2	3	20 AWG	PUR CSA/UL 20668	Black	5.6±0.2 mm
1210180387	B	2	4	20 AWG	PUR CSA/UL 20668	Black	6.2±0.2 mm
-	B	2	5	20 AWG	PUR CSA/UL 20668	Black	7±0.2 mm
1210180122	D	2	3	0.5 mm²	PVC TI2 CEI 20-20	Grey	5.5±0.2 mm
-	F	2	3	0.5 mm²	CNEOMO	Grey RAL7000	5.5±0.2 mm
1210180047	I	2	2	0.5 mm²	PVC CEI 2022 II O.R.	Grey RAL7035	5.5+0.3/-0 mm
1210180284	I	2	3	0.5 mm²	PVC CEI 2022 II O.R.	Grey RAL7035	5.5+0.3/-0 mm
1210180146	I	2	4	0.5 mm²	PVC CEI 2022 II O.R.	Grey RAL7035	6.5±0.2 mm
1210180177	I	2	5	0.5 mm²	PVC CEI 2022 II O.R.	Grey RAL7035	7±0.2 mm
1210180022	N	2	2	0.5 mm²	PVCH03	Black	5.2±0.2 mm
1202092753	N	2	3	0.5 mm²	PVCH03	Black	5.5±0.2 mm
1210180153	N	2	4	0.5 mm²	PVCH03	Black	6.9 mm max
1210180046	P	2	2	0.5 mm²	PUR-BLEND	Black	5.5±0.2 mm
1202092439	P	2	3	0.5 mm²	PUR-BLEND	Black	5.5+0.3/-0 mm
1210180302	P	2	4	0.5 mm²	PUR-BLEND	Black	6.5±0.2 mm
1202092215	P	2	5	0.5 mm²	PUR-BLEND	Black	7+0.3/-0.1 mm
1210180409	A	3	2	18 AWG	PVC CSA/UL 2661	Black	6.5±0.25 mm
1210180129	A	3	3	18 AWG	PVC CSA/UL 2661	Black	6.5±0.25 mm
1210180159	A	3	4	18 AWG	PVC CSA/UL 2661	Black	7±0.3 mm
1210180464	A	3	5	18 AWG	PVC CSA/UL 2661	Black	7.8±0.25 mm
1210180351	B	3	2	18 AWG	PUR CSA/UL 20668	Black	6.8±0.2 mm
1210180127	B	3	3	18 AWG	PUR CSA/UL 20668	Black	6.5±0.2 mm
1210180160	B	3	4	18 AWG	PUR CSA/UL 20668	Black	7±0.2 mm
1210180463	B	3	5	18 AWG	PUR CSA/UL 20668	Black	7.8±0.2 mm
1210180073	D	3	3	0.75 mm²	PVC TI2 CEI 20-20	Grey	6.5±0.2 mm
1210180145	D	3	4	0.75 mm²	PVC TI2 CEI 20-20	Grey	7.1±0.2 mm
1202098206	I	3	2	0.75 mm²	PVC CEI 2022 II O.R.	Grey RAL7001	5.5±0.2 mm
1210180120	I	3	3	0.75 mm²	PVC CEI 2022 II O.R.	Grey RAL7035	6±0.2 mm
1210180143	I	3	4	0.75 mm²	PVC CEI 2022 II O.R.	Grey RAL7035	7±0.2 mm
1210180032	N	3	2	0.75 mm²	PVCH05	Black	6.2±0.2 mm
1210180069	N	3	3	0.75 mm²	PVCH05	Black	6.5±0.2 mm
1210180144	N	3	4	0.75 mm²	PVCH05	Black	7.1±0.2 mm
1210180174	N	3	5	0.75 mm²	PVCH05	Black	8.0+0.2/-0 mm
1202094190	P	3	2	0.75 mm²	PUR-BLEND	Black	6.5±0.2 mm
1210180071	P	3	3	0.75 mm²	PUR-BLEND	Black	6.5±0.2 mm
1210180152	P	3	4	0.75 mm²	PUR-BLEND	Black	7±0.2 mm
1210180384	R	3	3	0.75 mm²	TPR HAL. FREE	Black	6.5±0.2 mm
1210180094	T	3	3	0.75 mm²	PUR CSA/UL	Yellow	6.5±0.2 mm
1210180309	Y	3	3	0.75 mm²	SIL/0300	Red	6.5±0.2 mm
1210180081	F	4	3	1 mm²	CNEOMO	Grey RAL7000	7.1+0.2/-0 mm
-	F	4	4	1 mm²	CNEOMO	Grey RAL7000	7.1+0.2/-0 mm
1210180042	I	4	2	1 mm²	PVC CEI 2022 II O.R.	Grey RAL7035	7.1+0.2/-0 mm
1210180079	I	4	3	1 mm²	PVC CEI 2022 II O.R.	Grey RAL7035	7.1+0.2/-0 mm
1210180036	N	4	2	1 mm²	PVCH05	Black	6.5±0.2 mm
1210180082	N	4	3	1 mm²	PVCH05	Black	6.9±0.2 mm
1210180117	R	4	3	1 mm²	TPR HAL. FREE	Black	7.1±0.2 mm
1210180085	N	5	3	1.5 mm²	PVCH05	Black	8.3+0.2/-0 mm
1210180313	I	6	2	0.35 mm²	PVC CEI 2022 II O.R.	Grey RAL7035	4.8±0.2 mm
-	A	7	3	20 AWG	PVC CSA/UL 2661	Yellow	5.6±0.2 mm
1210180149	I	9	4	0.75 mm²	PVC CEI 2022 II O.R.	Grey RAL7035	7.3±0.2 mm

TABLE 2 - PART LIST

MOLEX PN	ENGINEERING PN
1210550123	E652N3NC3011C3B
1210550139	E652N2NL1511S02
1210550160	E652N2NL151PS02
1210550206	E652N3NE1611C42
1210550207	E652N3NE1611C41
1210550254	E652P2NP1321C4H
1210550276	E652N2NL1611C4H
1210550278	E652N3NB3511000
1210550279	E652N3NL1611C4H
1210550281	E652P3NA1311A11
1210550297	E652N3NC1611000
1210550304	E652N2NE201PS02
1210550316	E652N2NE251PS02
1210550335	E652P3NA131PS0G
1210550336	E652P3NA151PS0G
1210550348	E652N2NE151PS02

THIS DRAWING CONTAINS INFORMATION THAT IS PROPRIETARY TO MOLEX ELECTRONIC TECHNOLOGIES, LLC AND SHOULD NOT BE USED WITHOUT WRITTEN PERMISSION

FUNCTIONAL SYMBOLS: F/A = 0, F/C = 0, F/P = 0
DIVISIONAL SYMBOLS

DIMENSION UNITS: mm
SCALE: 1:1
GENERAL TOLERANCES (UNLESS SPECIFIED)

ANGULAR TOL	±	1.0 °
4 PLACES	±	
3 PLACES	±	
2 PLACES	±	0.05
1 PLACE	±	0.3
0 PLACES	±	0.5

DRAFT WHERE APPLICABLE MUST REMAIN WITHIN DIMENSIONS

CURRENT REV DESC: TOL. TABLE UPDATED

EC NO: 642619
DRWN: SSM 2020/07/20
CHK'D: RSILLER 2020/09/04
APPR: RSILLER 2020/09/04

INITIAL REVISION:
DRWN: APAWLAK01 2017/07/03
APPR: MIWASIECZKO 2017/07/05

THIRD ANGLE PROJECTION | DRAWING: A3-SIZE | SERIES: 121055

molex

STANDARD E652 DIN FORM A DUAL

PRODUCT CUSTOMER DRAWING

DOCUMENT NUMBER	DOC TYPE	DOC PART	REVISION
1210550123	PSD	000	A1

MATERIAL NUMBER	CUSTOMER	SHEET NUMBER
SEE PART LIST	GENERAL MARKET	3 OF 3

DOCUMENT STATUS	P1	RELEASE DATE	2020/09/04 13:21:28

FORMAT: master-lb-prod-A3
REVISION: J
DATE: 2020/01/14

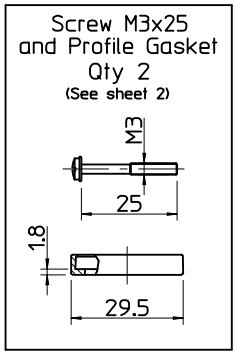

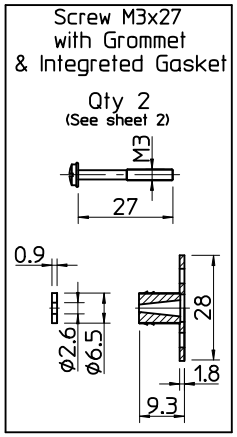

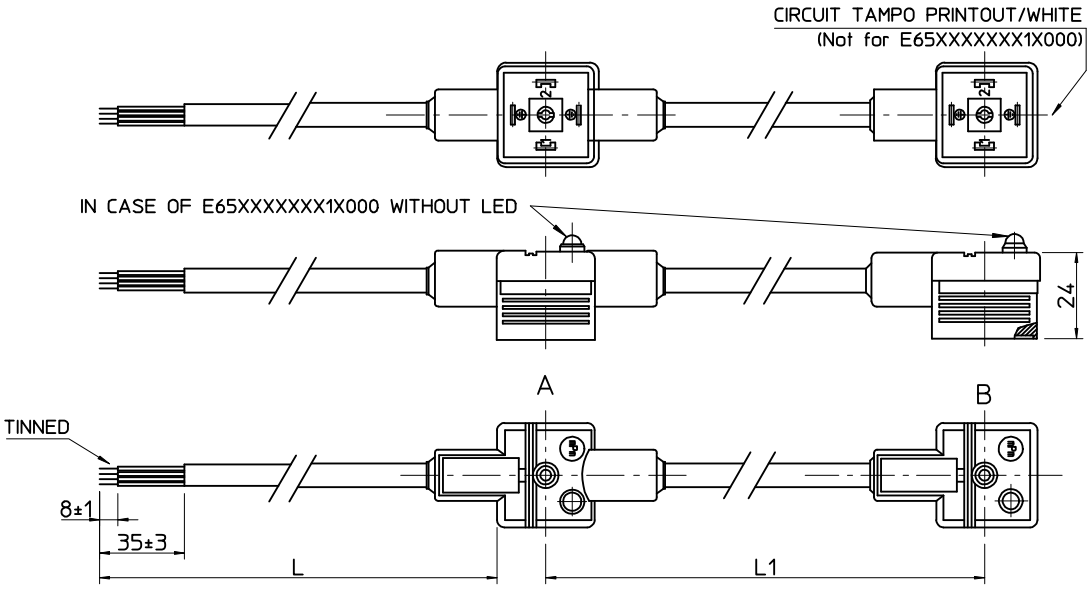

Table of lenght tolerances [mm]		
Over	Up to and including	Tolerance
0	1000	±20
1000	3000	±30
3000	5000	±40
5000	10000	±50
10000	15000	±100
15000	20000	±150
20000		±L/100

NOTE: Ground on schematics does not apply to E652XXXXXX1XXXX

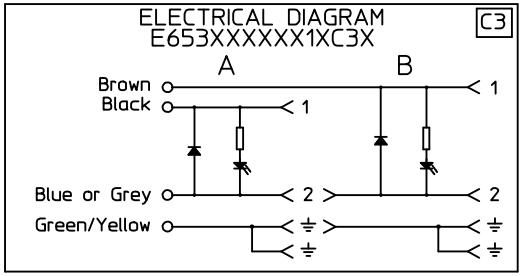

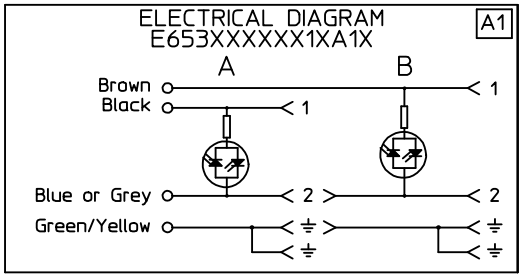

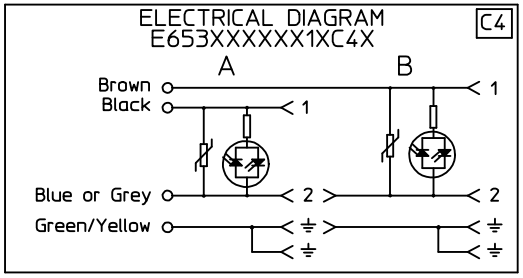

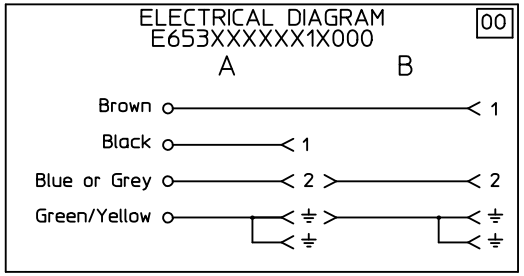

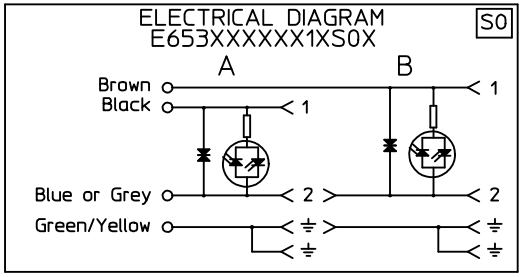

DRAWING UPDATE
EC NO: IPG2013-1505
DRWN: JMARSZALEK 2013/03/28
CH'KD:
APPR: MIWASIECZKO 2013/04/02
DESCRIPTION
REV B

QUALITY SYMBOLS
▼=0
(C)=0

GENERAL TOLERANCES (UNLESS SPECIFIED)	mm	INCH
4 PLACES	± ---	± ---
3 PLACES	± ---	± ---
2 PLACES	± ---	± ---
1 PLACE	± ---	± ---
0 PLACE	± ---	± ---
ANGULAR ±---°		

DRAFT WHERE APPLICABLE MUST REMAIN WITHIN DIMENSIONS

DIMENSION STYLE: MM ONLY
SCALE
DESIGN UNITS: METRIC
FIRST ANGLE PROJECTION

DRAWN BY: JMARSZALEK DATE: 2013/01/16
CHECKED BY: MSZWAJKOWSKI DATE: 2013/01/16
APPROVED BY: MIWASIECZKO DATE: 2013/02/12

TITLE: E65XXXXXXX1XXXX DUAL DIN FORM A

molex

MATERIAL NO.: SEE SHEET 2&3
DOCUMENT NO.: SD-121055-001
SHEET NO.: 1 OF 4
SIZE: A3

THIS DRAWING CONTAINS INFORMATION THAT IS PROPRIETARY TO MOLEX INCORPORATED AND SHOULD NOT BE USED WITHOUT WRITTEN PERMISSION

E	6	5	X	X	X	X	X	X	X	1	X	X	X	X

E - Packing without bags
W - Single packing
Q - Quick packing

NUMBER OF WIRES:
2=2 POLES
3=2 POLES+GROUND

CABLE TYPE
SEE TABLE 1

CABLE CROSS SECTION AREA
SEE TABLE 2

HEAD COLOUR:
G=GREY
N=BLACK
T=TRANSPARENT
A=CSA-UL BLACK
B=CSA-UL GREY

CABLE LENGHT IN METERS (L)
A=1
B=1,5
C=2
D=2,5
E=3
F=3,5
G=4
H=4,5
L=5
M=5,5
N=6
P=6,5
Q=7
R=7,5
S=8
T=8,5
U=9
K=10

CABLE LENGHT IN CM BETWIN 2 MOULDINGS (L1)
Eg.:050=50 CM, 300=300 CM, 10K=1000 CM

EARTH PIN LOCATION:
1=DOUBLE EARTH ON 6H AND 12H.

TYPE OF GASKET AND SCREW:
1=NBR PROFILE GASKET + FIXING SCREWS (M3x25 mm).
2=NBR FLAT GASKET + FIXING SCREW (M3x25 mm).
3=SILICONE PROFILE GASKET + FIXING SCREW (M3x25 mm).
4=SILICON FLAT GASKET + FIXING SCREW (M3x25 mm).
P=INTEGRATED GASKET ASSEMBLED + FIXING SCREW WITH GROMMET ASSEMBLED (M3x27 mm).
R=INTAGRATED GASKET + FIXING SCREW + GROMMET (M3x27 mm).
T=PROFILE GASKET + FIXING SCREW + GROMMET (M3x27 mm).

INTERNAL CIRCUIT
WIRING CONFIGURATION

VOLTAGE AND LED COLOUR:

RED LED	GREEN LED	YELLOW LED
1= 12V	A= 12V	G= 12V
2= 24V	B= 24V	H= 24V
3= 48V	C= 48V	K= 48V
4= 115V	D= 115V	L= 115V
5= 230V	E= 230V	M= 230V

DRAWING UPDATE
EC NO: IPG2013-1505
DRWN: JMARSZALEK 2013/03/28
CH'KD:
APPR: MIWASIECZKO 2013/04/02
DESCRIPTION
REV B

QUALITY SYMBOLS
▼=0
(C)=0

GENERAL TOLERANCES (UNLESS SPECIFIED)

	mm	INCH
4 PLACES	± ---	± ---
3 PLACES	± ---	± ---
2 PLACES	± ---	± ---
1 PLACE	± ---	± ---
0 PLACE	± ---	± ---
ANGULAR ±---°		

DRAFT WHERE APPLICABLE MUST REMAIN WITHIN DIMENSIONS

DIMENSION STYLE: MM ONLY
SCALE: 1:1
DESIGN UNITS: METRIC
FIRST ANGLE PROJECTION

DRAWN BY: JMARSZALEK DATE: 2013/01/16
CHECKED BY: MSZWAJKOWSKI DATE: 2013/01/16
APPROVED BY: MIWASIECZKO DATE: 2013/02/12
MATERIAL NO.: SEE SHEET 2&3

TITLE
E65XXXXXXX1XXXX
DUAL DIN FORM A

molex

DOCUMENT NO.: SD-121055-001
SHEET NO.: 2 OF 4
SIZE: A3

THIS DRAWING CONTAINS INFORMATION THAT IS PROPRIETARY TO MOLEX INCORPORATED AND SHOULD NOT BE USED WITHOUT WRITTEN PERMISSION

TABLE 2 - CABLES

Molex PN	mPm	Code	Wires	Cross Section	Material	Color	Diameter Ø	DIN A-B	DIN C
1210180080	I	0	3	1 mm2	PVC CEI 2022 II O.R.	Grey RAL7035	6,4±0,2 mm	OK.	-
1210180467	A	2	2	20 AWG	PVC CSA/UL 2661	Black	5,4±0,2 mm	OK.	OK.
1210180128	A	2	3	20 AWG	PVC CSA/UL 2661	Black	5,6±0,2 mm	OK.	OK.
1210180394	A	2	4	20 AWG	PVC CSA/UL 2661	Black	6,2±0,25 mm	OK.	OK.
-	A	2	5	20 AWG	PVC CSA/UL 2661	Black	7±0,2 mm	OK.	-
1210180297	B	2	2	20 AWG	PUR CSA/UL 20668	Black	5,6±0,2 mm	OK.	OK.
1210180126	B	2	3	20 AWG	PUR CSA/UL 20668	Black	5,6±0,2 mm	OK.	OK.
1210180387	B	2	4	20 AWG	PUR CSA/UL 20668	Black	6,2±0,2 mm	OK.	OK.
-	B	2	5	20 AWG	PUR CSA/UL 20668	Black	7±0,2 mm	OK.	-
1210180122	D	2	3	0,5 mm2	PVC TI2 CEI 20-20	Grey	5,5±0,2 mm	OK.	OK.
-	F	2	3	0,5 mm2	CNOMO	Grey RAL7000	5,5±0,2 mm	OK.	OK.
1210180047	I	2	2	0,5 mm2	PVC CEI 2022 II O.R.	Grey RAL7035	5,5+0,3/-0 mm	OK.	OK.
1210180284	I	2	3	0,5 mm2	PVC CEI 2022 II O.R.	Grey RAL7035	5,5+0,3/-0 mm	OK.	OK.
1210180146	I	2	4	0,5 mm2	PVC CEI 2022 II O.R.	Grey RAL7035	6,5±0,2 mm	OK.	OK.
1210180177	I	2	5	0,5 mm2	PVC CEI 2022 II O.R.	Grey RAL7035	7±0,2 mm	OK.	-
1210180022	N	2	2	0,5 mm2	PVCH03	Black	5,2±0,2 mm	OK.	OK.
1202092753	N	2	3	0,5 mm2	PVCH03	Black	5,5±0,2 mm	OK.	OK.
1210180153	N	2	4	0,5 mm2	PVCH03	Black	6,9 mm max	OK.	OK.
1210180046	P	2	2	0,5 mm2	PUR - BLEND	Black	5,5±0,2 mm	OK.	OK.
1202092439	P	2	3	0,5 mm2	PUR - BLEND	Black	5,5 +0,3/-0 mm	OK.	OK.
1210180302	P	2	4	0,5 mm2	PUR - BLEND	Black	6,5±0,2 mm	OK.	OK.
1202092215	P	2	5	0,5 mm2	PUR - BLEND	Black	7+0,3/-0,1 mm	OK.	OK.
1210180409	A	3	2	18 AWG	PVC CSA/UL 2661	Black	6,5±0,25 mm	OK.	-
1210180129	A	3	3	18 AWG	PVC CSA/UL 2661	Black	6,5±0,25 mm	OK.	-
1210180159	A	3	4	18 AWG	PVC CSA/UL 2661	Black	7±0,3 mm	OK.	-
1210180464	A	3	5	18 AWG	PVC CSA/UL 2661	Black	7,8±0,25 mm	OK.	-
1210180351	B	3	2	18 AWG	PUR CSA/UL 20668	Black	6,8±0,2 mm	OK.	-
1210180127	B	3	3	18 AWG	PUR CSA/UL 20668	Black	6,5±0,2 mm	OK.	-
1210180160	B	3	4	18 AWG	PUR CSA/UL 20668	Black	7±0,2 mm	OK.	-
1210180463	B	3	5	18 AWG	PUR CSA/UL 20668	Black	7,8±0,2 mm	OK.	-
1210180073	D	3	3	0,75 mm2	PVC TI2 CEI 20-20	Grey	6,5±0,2 mm	OK.	OK.
1210180145	D	3	4	0,75 mm2	PVC TI2 CEI 20-20	Grey	7,1±0,2 mm	OK.	-
1202098206	I	3	2	0,75 mm2	PVC CEI 2022 II O.R.	Grey RAL7001	5,5±0,2 mm	OK.	-
1210180120	I	3	3	0,75 mm2	PVC CEI 2022 II O.R.	Grey RAL7035	6±0,2 mm	OK.	-
1210180143	I	3	4	0,75 mm2	PVC CEI 2022 II O.R.	Grey RAL7035	7±0,2 mm	OK.	-
1210180032	N	3	2	0,75 mm2	PVCH05	Black	6,2±0,2 mm	OK.	-
1210180069	N	3	3	0,75 mm2	PVCH05	Black	6,5±0,2 mm	OK.	-
1210180144	N	3	4	0,75 mm2	PVCH05	Black	7,1±0,2 mm	OK.	-
1210180174	N	3	5	0,75 mm2	PVCH05	Black	8,0+0,2-0 mm	OK.	-
1202094190	P	3	2	0,75 mm2	PUR - BLEND	Black	6,5±0,2 mm	OK.	-

TABLE 2 - CABLES

Molex PN	mPm	Code	Wires	Cross Section	Material	Color	Diameter Ø	DIN A-B	DIN C
1210180071	P	3	3	0,75 mm2	PUR - BLEND	Black	6,5±0,2 mm	OK.	
1210180152	P	3	4	0,75 mm2	PUR - BLEND	Black	7±0,2 mm	OK.	
1210180384	R	3	3	0,75 mm2	TPR HAL. FREE	Black	6,5±0,2 mm	OK.	
1210180094	T	3	3	0,75 mm2	PUR CSA/UL	Yellow	6,5±0,2 mm	OK.	-
1210180309	Y	3	3	0,75 mm2	SIL/0300	Red	6,5±0,2 mm	OK.	-
1210180081	F	4	3	1 mm2	CNOMO	Grey RAL7000	7,1+0,2/-0 mm	OK.	-
-	F	4	4	1 mm2	CNOMO	Grey RAL7000	7,1+0,2/-0 mm	OK.	
1210180042	I	4	2	1 mm2	PVC CEI 2022 II O.R.	Grey RAL7035	7,1+0,2/-0 mm	OK.	
1210180079	I	4	3	1 mm2	PVC CEI 2022 II O.R.	Grey RAL7035	7,1+0,2/-0 mm	OK.	
1210180036	N	4	2	1 mm2	PVCH05	Black	6,5±0,2 mm	OK.	
1210180082	N	4	3	1 mm2	PVCH05	Black	6,9±0,2 mm	OK.	
1210180117	R	4	3	1 mm2	TPR HAL. FREE	Black	7,1±0,2 mm	OK.	-
1210180085	N	5	3	1,5 mm2	PVCH05	Black	8,3+0,2/-0 mm	OK.	
1210180313	I	6	2	0,35 mm2	PVC CEI 2022 II O.R.	Grey RAL7035	4,8±0,2 mm	OK.	-
-	A	7	3	20 AWG	PVC CSA/UL 2661	Yellow	5,6±0,2 mm	OK.	OK.
1210180149	I	9	4	0,75 mm2	PVC CEI 2022 II O.R.	Grey RAL7035	7,3±0,2 mm	OK.	-

TABLE 1 - CABLES TYPE

Code	Cable types	Features	Stranding
N	PVC	Application general purpose cable which has good resistance to water, but usually poor oil resistance.	0.5 mm2 = 15 x 0.20 0.75 mm2 = 21 x 0.20 1 mm2 = 28 x 0.20
I	CEI	Approved to IEC 332-2A, flame retardant and self extinguishing. Limited resistant to mineral oils.	0.5 mm2 = 28 x 0.15 0.75 mm2 = 42 x 0.15 1 mm2 = 32 x 0.20
P	PUR	Offer good resistance to oil and chemicals. Can swell when constantly immersed in water.	0.5 mm2 = 28 x 0.15 0.75 mm2 = 42 x 0.15 1 mm2 = 32 x 0.20
A	PVC CSA-UL	Approved to CSA-UL 2661, application general purpose cable which has good resistance to water, but usually poor oil resistance.	20 AWG = 32 x 0.15 18 AWG = 52 x 0.15
B	PUR CSA-UL	Approved to CSA-UL 20668, very good resistance to oil and chemicals.	20 AWG = 32 x 0.15 18 AWG = 52 x 0.15

DRAWING UPDATE
EC NO: IPG2013-1505
DRWN: JMARSZALEK 2013/03/28
CH'KD:
APPR: MIWASIECZKO 2013/04/02
DESCRIPTION
B
REV

QUALITY SYMBOLS
▼=0
(C)=0

GENERAL TOLERANCES (UNLESS SPECIFIED)

	mm	INCH
4 PLACES	± ---	± ---
3 PLACES	± ---	± ---
2 PLACES	± ---	± ---
1 PLACE	± ---	± ---
0 PLACE	± ---	± ---
ANGULAR ±---°		

DRAFT WHERE APPLICABLE MUST REMAIN WITHIN DIMENSIONS

DIMENSION STYLE: MM ONLY
SCALE: 1:1
DESIGN UNITS: METRIC
FIRST ANGLE PROJECTION

DRAWN BY: JMARSZALEK DATE: 2013/01/16
CHECKED BY: MSZWAJKOWSKI DATE: 2013/01/16
APPROVED BY: MIWASIECZKO DATE: 2013/02/12
MATERIAL NO.: SEE SHEET 2&3

TITLE: E65XXXXXXX1XXXX DUAL DIN FORM A

molex

DOCUMENT NO.: SD-121055-001
SHEET NO.: 3 OF 4
SIZE: A3

THIS DRAWING CONTAINS INFORMATION THAT IS PROPRIETARY TO MOLEX INCORPORATED AND SHOULD NOT BE USED WITHOUT WRITTEN PERMISSION

10 9 8 7 6 5 4 3 2 1

PART LIST

Molex PN:	Engineering No.:
1210550161	E653P3NA1311C4H
1210550292	E653P3NA1311C4M
.	.

REV	DESCRIPTION				
B	DRAWING UPDATE	EC NO: IPG2013-1505	DRWN:JMARSZALEK 2013/03/28	CH'KD:	APPR:MIWASIECZKO 2013/04/02

QUALITY SYMBOLS
▼=0
Ⓒ=0

GENERAL TOLERANCES (UNLESS SPECIFIED)

	mm	INCH
4 PLACES	±---	±---
3 PLACES	±---	±---
2 PLACES	±---	±---
1 PLACE	±---	±---
0 PLACE	±---	±---

ANGULAR ±---°

DRAFT WHERE APPLICABLE MUST REMAIN WITHIN DIMENSIONS

DIMENSION STYLE: MM ONLY
SCALE: 1:1
DESIGN UNITS: METRIC
FIRST ANGLE PROJECTION

		DATE
DRAWN BY	JMARSZALEK	2013/01/16
CHECKED BY	MSZWAJKOWSKI	2013/01/16
APPROVED BY	MIWASIECZKO	2013/02/12

TITLE: E65XXXXXXX1XXXX DUAL DIN FORM A

molex

MATERIAL NO.: SEE SHEET 2&3
DOCUMENT NO.: SD-121055-001
SHEET NO.: 4 OF 4
SIZE: A3

THIS DRAWING CONTAINS INFORMATION THAT IS PROPRIETARY TO MOLEX INCORPORATED AND SHOULD NOT BE USED WITHOUT WRITTEN PERMISSION