In Addition to GlobTek Inc.'s renewed ISO9001:2015 - Quality Management System Certification, GlobTek Inc. is now certified to:

ISO13485:2016 - Medical Devices Quality Management System Certification
ISO14001:2015 - Environmental Management System Certification

ISO Certificates are available online at https://www.globtek.com/iso-certificates/

The acceptance of this specification and use of the product described in this document indicates the acceptance and binding of the customer to Globtek TERMS AND CONDITIONS (attached to the end of this document), which supersede all other agreements, terms, and conditions (https://en.globtek.com/terms-and-conditions/).

The purchaser of this product (Customer) agrees that it is their sole responsibility to determine suitability/fitness of the product described in this specification for their application and to take precautions for protection against any hazards attendant to the handling and use of the product.

Footnote:

GlobTek Inc. will not be liable for the safety and performance of these power supplies/battery packs if unauthorized access and repair occurs. End user should consult applicable UL, CSA or EN standards for proper installation instruction.

Limitation of Use:

GlobTek products are intended for use with commercial, medical, and/or industrial equipment only. GlobTek product are not authorized for use as mission critical components in life support hazardous environment, nuclear or aircraft applications without prior written approval from the CEO of GlobTek Inc.
Contents of this document are subject to change without prior notice.

Customer Approval of Specification:

Please approve, sign and send back to GlobTek so we can complete order processing.
A delay in receipt of this form will delay delivery schedule.

Company Name:	Customer P/N:
Quote Number:	Date:
Authorized Representative Name:	Authorized Representative Signature:

PROPRIETARY INFORMATION
PROPRIETARY OF GLOBTEK, INC. ANY REPRODUCTION, DISCLOSURE OR USE OF THIS DRAWING, IN WHOLE OR IN PART, IS HEREBY PROHIBITED EXCEPT AS SPECIFIED IN WRITING BY GLOBTEK, INC. © GlobTek, Inc. 2020 - 2022
guest /09/13/2022 8:32:05 AM CLONED FROM WR9HB2000CCPIMFR6B

REVISION HISTORY

REV	DESCRIPTION	SUB	DATE	APPROVED
A	Initial release	QA	10/14/2020	QA

POWER SUPPLY INFORMATION

TYPE:	Wall Plug-in
TECHNOLOGY:	AC Adaptor Power Supply AC Adaptor
CASE COLOR:	GlobTek Black
NAMEPLATE RATED INPUT:	100-240V~, 50-60Hz, 0.3A
INPUT CONFIG:	N. America NEMA 1-15 Fixed
WATTS:	12.0
VOLTS OUT:	5.95
CURRENT OUT (Amps):	2.0
BLADE/CORD INCLUDED:	FBNA2 Fixed Blades North American 1-15P
BLADE/CORD INSTALLED:	FBNA2 :Fixed Blades North American 1-15P
INGRESS PROTECTION:	IP22
GROUNDING CONFIGURATION:	(F1) Class II / Double Insulated
EFFICIENCY LEVEL:	USA DOE Level VI / Eco-design Directive 2009/125/EC, (EU) 2019/1782
OUTPUT CONFIGURATION:	1500 mm, 22/2 Cond, UL 2468, Female Barrel 5.5 * 2.5 * 11mm with internal Spring Clip and Locking Notch or Equal, Ferrite: None, GlobTek Black, GT Cord # C7832
OVERMOLDED:	Yes
OUTPUT CONNECTOR GENDER:	Female
CONNECTOR PIN OUT:	Center Positive (+V), symbol compliant with IEC 60417 symbol no. 5926
LABEL SPECS:	ISO 15223 medical device compliant label,L-1470
SPECIAL BARCODE LABEL MATERIAL:	No
PACK SPEC:	Standard WPI, Cellular packaging
USER MANUAL:	

PROPRIETARY INFORMATION

PROPRIETARY OF GLOBTEK, INC. ANY REPRODUCTION, DISCLOSURE OR USE OF THIS DRAWING, IN WHOLE OR IN PART, IS HEREBY PROHIBITED EXCEPT AS SPECIFIED IN WRITING BY GLOBTEK, INC. © GlobTek, Inc. 2020 - 2022

guest /09/13/2022 8:32:05 AM CLONED FROM WR9HB2000CCPIMFR6B

Notes/Modifications/Customizations (notes in this section supersede the values shown in the standard spec):

DIMENSIONS ARE IN MM UNLESS SPECIFIED OTHERWISE.

PROPRIETARY INFORMATION

PROPRIETARY OF GLOBTEK, INC. ANY REPRODUCTION, DISCLOSURE OR USE OF THIS DRAWING, IN WHOLE OR IN PART, IS HEREBY PROHIBITED EXCEPT AS SPECIFIED IN WRITING BY GLOBTEK, INC. © GlobTek, Inc. 2020 - 2022

guest /09/13/2022 8:32:05 AM CLONED FROM WR9HB2000CCPIMFR6B

ELECTRICAL SPECIFICATIONS

01. Input Voltage: Specified 90-264 Vac, Nameplate rated: 100-240Vac
02. Input Frequency: Specified 47-63 Hz, Nameplate rated 50/60Hz
03. Output Regulation: +/- 5%
04. Line Voltage Regulation: +/- 1%
05. Output Ripple (Vp-p): 1% or 100 mV whichever is greater, measured at 20 MHz bandwidth with 0.1 uf ceramic capacitor in parallel with a low impedance 47 uf electrolytic capacitor connected at the end of the output connector
06. Hold-up Time: 5 mS minimum
07. Inrush Current: 30A maximum @ 230Vac input
08. Energy Efficiency: Complies to Efficiency Level VI and ErP European Commission's Ecodesign Directive (2005/32/EC) / CoC Tier 2 Compliant

B) PROTECTION
01. Over-current protection: 110%-140% maximum with auto-recovery function
02. Output Over-Voltage: 110% to 130% of nominal output voltage
03. Short-circuit protection: The adapter shall not be damaged by short the DC output to Ground.

C) SAFETY
01. Dielectric Withstand Voltage: Primary To Secondary: 4000VAC or 5656VDC for 3 seconds
02. Leakage Current: 50uA maximum, at nominal 240Vac input voltage
03. ESD Immunity per EN61000-4-2, ±8 kV contact, ±15 kV air, Perf Criteria A Standard.

D) EMC
01. Emissions, per EN 55032, EN 61000-6-3, EN 61000-6-4
  Conducted Emissions: Class B, FCC Part 15, Class B
  Radiated Emissions: Class B, FCC Part 15, Class B
02. Line Frequency Harmonics EN61000-3-2, Class A
03. Voltage Fluctuations/Flicker EN61000-3-3
04. Immunity, per EN 55024, EN 61000-6-1, EN 61000-6-2
  Static Discharge Immunity EN61000-4-2, 8kV Contact Discharge, 15kV air discharge
  Radiated RF Immunity EN61000-4-3, 3V/m 80-2700MHz, 80% 1KHz AM.
  EFT/Burst Immunity EN61000-4-4, 2kV/100kHz.
  Line Surge Immunity EN61000-4-5, 1kV differential, 2kV common-mode
  Conducted RF Immunity EN61000-4-6, 3Vrms, 80% 1KHz AM
  Power Frequency Magnetic Field Immunity EN61000-4-8, NA
  Voltage Dip Immunity EN61000-4-11, Criteria

E) OTHER:
01. MTBF: 300,000 Hours @ 25°C ambient temperature
02. Operating Temperature: 0°C to 50°C ambient temperature
03. Operating Humidity: 20 ~ 85 % RH. non-condensing
05. Storage Temperature: -20°C to 60°C
06. Storage Humidity:5 ~ 95 % RH. non-condensing
07. Cooling: Natural convection cooling
08. RoHS 2: Complies with EU 2011/65/EU China SJ/T 11364-2014

F) ENCLOSURE

PROPRIETARY INFORMATION
PROPRIETARY OF GLOBTEK, INC. ANY REPRODUCTION, DISCLOSURE OR USE OF THIS DRAWING, IN WHOLE OR IN PART, IS HEREBY PROHIBITED EXCEPT AS SPECIFIED IN WRITING BY GLOBTEK, INC. © GlobTek, Inc. 2020 - 2022
guest /09/13/2022 8:32:05 AM CLONED FROM WR9HB2000CCPIMFR6B

01. Housing: High impact plastic, 94V0 polycarbonate, non-vented
02. Markings: Label and/or Pad Printed and/or Molded in the case

F) OPTIONS:

01. Green Power On Indicator LED
02. NEMA 1-15P or European Schuko 7-16 AC Plug Configuration
03. Increased DC Output Voltage (up to 5.4V) to allow for long output cables
04. Special International Safety Approvals
05. Housing Color, special markings

TO ADDRESS SYSTEM-LEVEL EMI CONCERNS, FERRITE CHOKES/BEADS MAY BE ADDED/REVISED UPON REQUEST. A SAMPLE KIT OF GLOBTEK'S STANDARD FERRITES IS AVAILABLE UNDER GLOBTEK P/N: EMI-MITIGATION-KIT1

FOR ADDITIONAL INFORMATION, PLEASE READ OUR WHITE PAPER AT:
https://en.globtek.com/technical-articles/ferrite-kit-radiated-emi-suppression-kit-for-globtek-power-supplies-cable-assemblies

INGRESS PROTECTION: IP22

PROPRIETARY INFORMATION
PROPRIETARY OF GLOBTEK, INC. ANY REPRODUCTION, DISCLOSURE OR USE OF THIS DRAWING, IN WHOLE OR IN PART, IS HEREBY PROHIBITED EXCEPT AS SPECIFIED IN WRITING BY GLOBTEK, INC. © GlobTek, Inc. 2020 - 2022
guest /09/13/2022 8:32:05 AM CLONED FROM WR9HB2000CCPIMFR6B

GlobTek, Inc. www.globtek.com 186 Veterans Drive, Northvale, NJ 07647 Tel. (201) 784-1000 Fax (201) 784-0111	Drawing Title: GTM86101-1205.95-W2, ICT / ITE / Medical Power Supply, Efficiency Level: USA DOE Level VI / Eco-design Directive 2009/125/EC, (EU) 2019/1782, Case Color/Style: GlobTek Black, Wall Plug-in, AC Adaptor Power Supply AC Adaptor, Input Rating: 100-240V~, 50-60Hz, N. America NEMA 1-15 Fixed , Output Rating: 12W, 5.95V@2.0A, Output Configuration: 1500 mm, 22/2 Cond, UL 2468, Female Barrel 5.5 * 2.5 * 11mm with internal Spring Clip and Locking Notch or Equal, Ferrite: None, GlobTek Black, GT Cord # C7832, Pin Out: Center Positive (+V), symbol compliant with IEC 60417 symbol no. 5926, Blades/Input Cord: Fixed Blades North American 1-15P, Approvals: cETLus 60601-1; IP22; CB 60601-1-11; China RoHS; Double Insulation; EAC; Level VI; WEEE; VCCI; Ukraine; RoHS; PSE; PSE; CB 60601-1;	
	Model No. GTM86101-1205.95-W2	
	Part No./Ordering No. WR9HB2000LCPIMFR6B	Rev A

3D File Download https://www.globtek.com/dl/GTM86101-WWVV-W2.stp

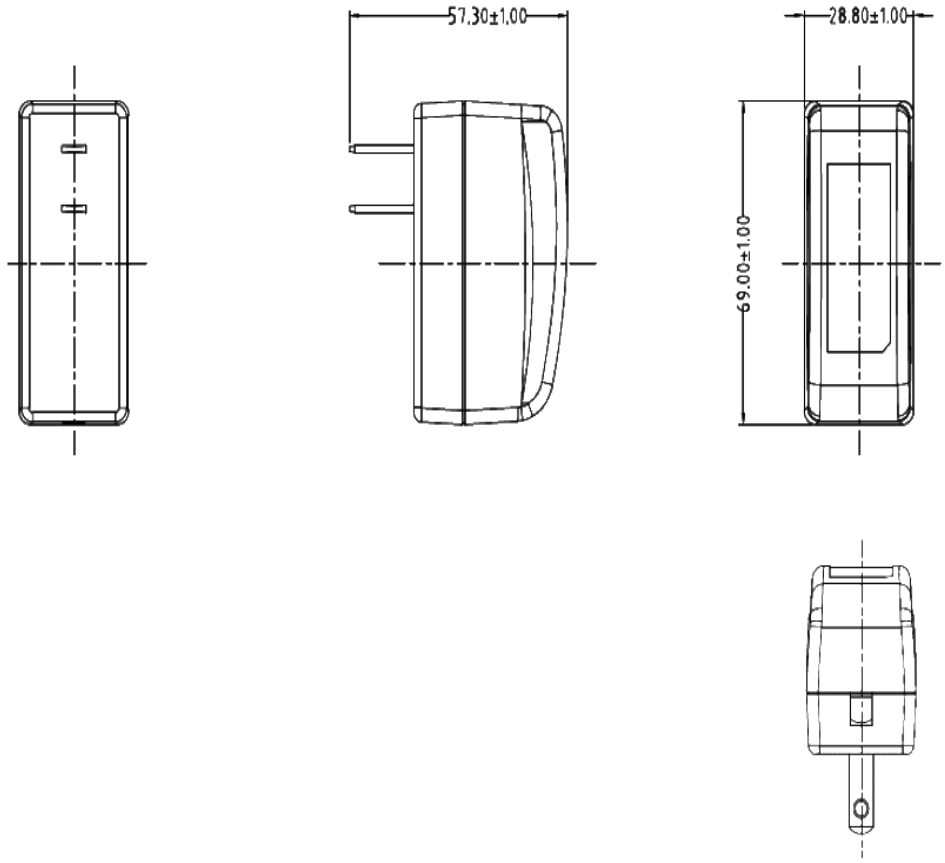

PROPRIETARY INFORMATION
PROPRIETARY OF GLOBTEK, INC. ANY REPRODUCTION, DISCLOSURE OR USE OF THIS DRAWING, IN WHOLE OR IN PART, IS HEREBY PROHIBITED EXCEPT AS SPECIFIED IN WRITING BY GLOBTEK, INC. © GlobTek, Inc. 2020 - 2022
guest /09/13/2022 8:32:05 AM CLONED FROM WR9HB2000CCPIMFR6B

DERATING CURVE

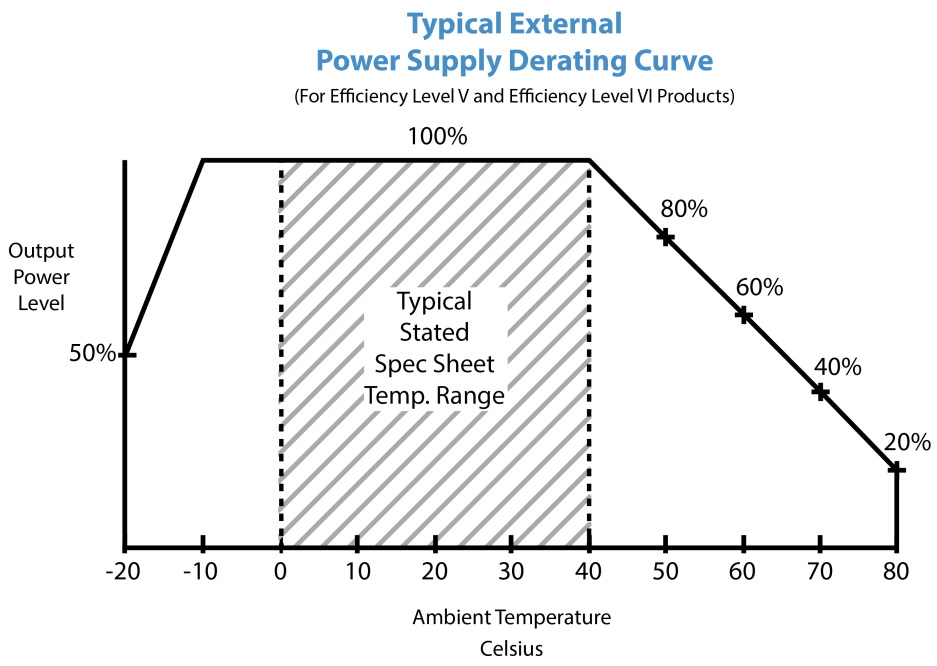

PROPRIETARY INFORMATION

PROPRIETARY OF GLOBTEK, INC. ANY REPRODUCTION, DISCLOSURE OR USE OF THIS DRAWING, IN WHOLE OR IN PART, IS HEREBY PROHIBITED EXCEPT AS SPECIFIED IN WRITING BY GLOBTEK, INC. © GlobTek, Inc. 2020 - 2022

guest /09/13/2022 8:32:05 AM CLONED FROM WR9HB2000CCPIMFR6B

INPUT CONFIGURATION

(F1) Class II / Double Insulated

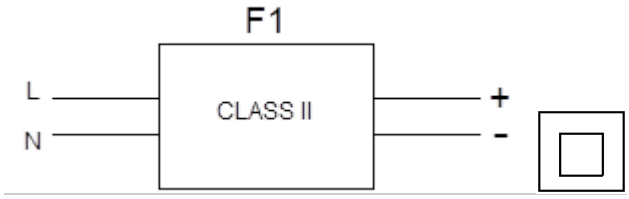

Alternate grounding configurations available upon request.

Blades/Cord Included:FBNA2:Fixed Blades North American 1-15P

Blades/Cord Installed:FBNA2:Fixed Blades North American 1-15P

NEMA 1-15P, North America Blades, Class II 2 Conductors

All NEMA 1 devices are two-wire non-grounding devices (hot-neutral) rated for 125 V maximum. NEMA 1-15P plugs have two parallel flat blades, 0.25 inches (6.35 mm) wide, 0.06 inches (1.524 mm) thick, 0.625-0.718 inches (15.875–18.256 mm) long, and spaced 0.5 inches (12.7 mm) apart.

PROPRIETARY INFORMATION

PROPRIETARY OF GLOBTEK, INC. ANY REPRODUCTION, DISCLOSURE OR USE OF THIS DRAWING, IN WHOLE OR IN PART, IS HEREBY PROHIBITED EXCEPT AS SPECIFIED IN WRITING BY GLOBTEK, INC. © GlobTek, Inc. 2020 - 2022

guest /09/13/2022 8:32:05 AM CLONED FROM WR9HB2000CCPIMFR6B

OUTPUT CORD AND CONNECTOR: LCL/C7832

ACTUAL CONNECTORS, OVERMOLDS, FERRITES MAY VARY SLIGHTLY FROM THE PICTURE BELOW

CABLE TYPE	UL 2468
CABLE LENGTH (mm)	1500
CABLE TOLERANCE (mm)	+150,-0
WIRE GAUGE (AWG)	22
CONDUCTORS	2
HANK DIMENSION (mm)	70 ± 10
CABLE / CONNECTOR OVERMOLD COLOR	GlobTek Black
FERRITE TYPE / DIMENSION	None
FERRITE # OF TURNS(Definition)	N/A
FERRITE DIMENSION FROM STRAIN RELIEF	N/A
FERRITE DIMENSION FROM PLUG	N/A
PLUG TYPE	Female Barrel 5.5 * 2.5 * 11mm with internal Spring Clip and Locking Notch or Equal
OUTPUT CONNECTOR GENDER	Female
OVERMOLDED	Yes
OVER MOLD ORIENTATION	Straight
CONNECTOR PIN OUT:	Center Positive (+V), symbol compliant with IEC 60417 symbol no. 5926
ADDITIONAL REQUIREMENTS	

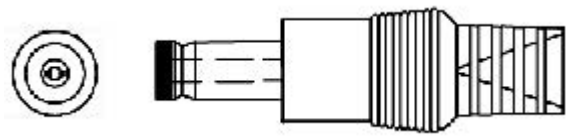

ADDITIONAL OUTPUT PLUG OPTIONS ARE AVAILABLE AT https://www.globtek.com/connectors/
STANDARD PLUGS AND CONNECTORS CAN BE SEEN ONLINE AT https://www.globtek.com/connectors/
CALCULATE VOLTAGE REGULATION/DROP WITH OUR ONLINE CALCULATOR: https://en.globtek.com/output-cable-regulation-calculator/

PROPRIETARY INFORMATION
PROPRIETARY OF GLOBTEK, INC. ANY REPRODUCTION, DISCLOSURE OR USE OF THIS DRAWING, IN WHOLE OR IN PART, IS HEREBY PROHIBITED EXCEPT AS SPECIFIED IN WRITING BY GLOBTEK, INC. © GlobTek, Inc. 2020 - 2022
guest /09/13/2022 8:32:05 AM CLONED FROM WR9HB2000CCPIMFR6B

OUTPUT CONNECTOR HOOK UP

TO ADDRESS SYSTEM-LEVEL EMI CONCERNS, FERRITE CHOKES/BEADS MAY BE ADDED/REVISED UPON REQUEST. A SAMPLE KIT OF GLOBTEK'S STANDARD FERRITES IS AVAILABLE UNDER GLOBTEK P/N: EMI-MITIGATION-KIT1

FOR ADDITIONAL INFORMATION, PLEASE READ OUR WHITE PAPER AT:
https://en.globtek.com/technical-articles/ferrite-kit-radiated-emi-suppression-kit-for-globtek-power-supplies-cable-assemblies

PROPRIETARY INFORMATION
PROPRIETARY OF GLOBTEK, INC. ANY REPRODUCTION, DISCLOSURE OR USE OF THIS DRAWING, IN WHOLE OR IN PART, IS HEREBY PROHIBITED EXCEPT AS SPECIFIED IN WRITING BY GLOBTEK, INC. © GlobTek, Inc. 2020 - 2022
guest /09/13/2022 8:32:05 AM CLONED FROM WR9HB2000CCPIMFR6B

LABEL:L-1470

LABEL P/N:	ISO 15223 medical device compliant label
MATERIAL:	Flat Thermal Transfer, Imprintable, Polyester Label and/or Pad Printed and/or Molded, and/or Laser Engraved in the case
BACKGROUND COLOR:	Black if housing is Black, White or Silver if housing is White or Gray.
TEXT COLOR:	White or Silver if label is Black Background for Black housing. Black if label is White or Silver background and Housing is White or Gray.
LABEL WIDTH (mm):	39.7
LABEL HEIGHT (mm):	16.2
SPECIAL BARCODE LABEL MATERIAL:	No

Below is the minimum information which will appear on the label. NOTE: in the logo area additional/actual positioning of symbols and text is subjected to change as per agency updates/requirements or additional model approvals become available.
Agency logos may be in Regulatory Certifications/Label Markings area on the label or molded into the case housing outside the label area. Information will be shown via Label and/or Pad Printed and/or Molded in the case.

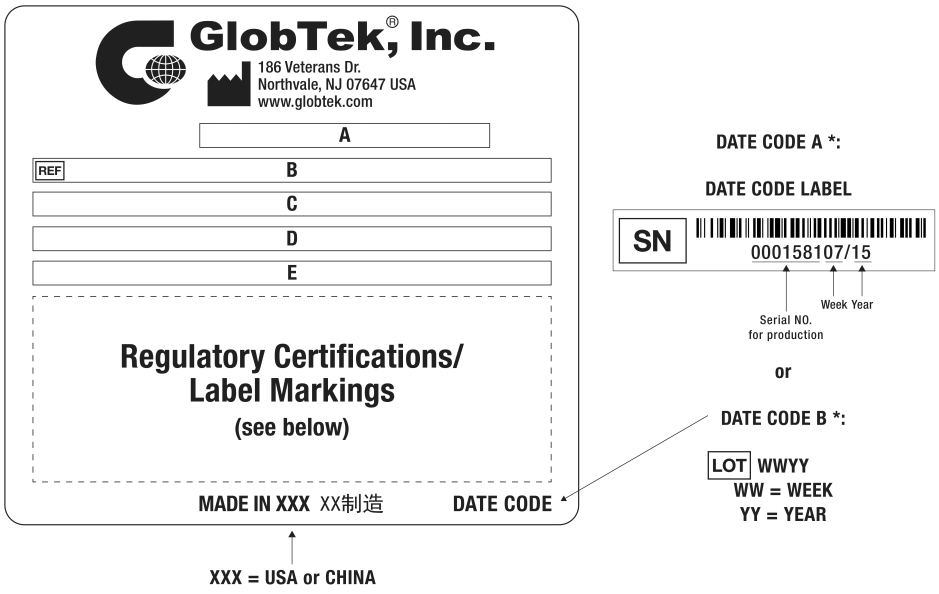

A=ICT / ITE / Medical Power Supply
B=P/N: (料号) WR9HB2000LCPIMFR6B
C=Model (型号) GTM86101-1205.95-W2
D=Input (输入)100-240V~, 50-60Hz, 0.3A
E=Output (输出)5.95 V ⎓ 2.0 A, 12.0W

PROPRIETARY INFORMATION
PROPRIETARY OF GLOBTEK, INC. ANY REPRODUCTION, DISCLOSURE OR USE OF THIS DRAWING, IN WHOLE OR IN PART, IS HEREBY PROHIBITED EXCEPT AS SPECIFIED IN WRITING BY GLOBTEK, INC. © GlobTek, Inc. 2020 - 2022
guest /09/13/2022 8:32:05 AM CLONED FROM WR9HB2000CCPIMFR6B

AGENCY ONLINE DOCUMENTS	http://www.globtek.info/certs/GTM86101/
CE EC-Declaration for Medical	http://globtek.force.com/models/ec_declaration_product?id=01t3a000005CMh7&m=1
CE EC-Declaration for Industrial/Commercial/ITE	http://globtek.force.com/models/ec_declaration_product?id=01t3a000005CMh7&i=5
CE EC-Declaration for Household	Contact GlobTek for more information
UKCA-Declaration for Medical	http://globtek.force.com/models/ukca_declaration_product?id=01t3a000005CMh7&m=1
UKCA-Declaration for Industrial/Commercial/ITE	http://globtek.force.com/models/ukca_declaration_product?id=01t3a000005CMh7&i=5
UKCA-Declaration for Household	Contact GlobTek for more information
Morocco SDoC Declaration	https://globtek.secure.force.com/models/Morocco_SDoC_Declaration?id=a0O3a00000LvGZDEA3
RoHS/RoHS3 Declaration	https://www.globtek.com/pdf/rohs_cert/01t3a000005CMh7AAG
REACH Declaration	https://www.globtek.com/pdf/iso_certificates/REACH.pdf
Conflict Minerals Declaration	https://www.globtek.com/pdf/conflict-minerals.pdf
Prop 65 Statement	https://en.globtek.com/prop-65-statement.pdf

IPXY rating is based on 3rd party testing and customers should check suitability and test system level IPXY rating before ordering.

Regulatory Certifications/Label Markings

Below follows a link to the latest regulatory certifications and marks for this specific product. National standards as well as certification schemes are constantly changing and so is the set of certification marks and symbols applicable to this product. Various standards, marks and symbols, and certificates are subject to change at any time without notice.

Additional standards or unique country certifications are available upon request. Please contact Globtek to request a quotation.

LATEST PRODUCT/MODEL CERTIFICATIONS:	https://www.globtek.com/datasheet/w70577
AGENCY ONLINE DOCUMENTS:	http://www.globtek.info/certs/GTM86101/
	(F1) Class II / Double Insulated
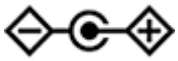	Center Positive (+V), symbol compliant with IEC 60417 symbol no. 5926

PROPRIETARY INFORMATION
PROPRIETARY OF GLOBTEK, INC. ANY REPRODUCTION, DISCLOSURE OR USE OF THIS DRAWING, IN WHOLE OR IN PART, IS HEREBY PROHIBITED EXCEPT AS SPECIFIED IN WRITING BY GLOBTEK, INC. © GlobTek, Inc. 2020 - 2022
guest /09/13/2022 8:32:05 AM CLONED FROM WR9HB2000CCPIMFR6B

PACKAGING

Packing Spec P/N:	Standard WPI, Cellular packaging
Box Qty:	120
Gift Box Size (mm):	Cellular Packaging
Gift Box Color:	None
Master Carton Size (mm):	470 x 310 x 284
Master Carton Cubic Volume (m³):	0.04
Master GW (Kg):	15.6 kg
BLADES INCLUDED:	FBNA2: Fixed Blades North American 1-15P
BLADE/CORD INSTALLED:	FBNA2: Fixed Blades North American 1-15P
USER MANUAL*:	
USER MANUAL WEB LINK:	

* This specification sheet is considered the user manual for all applications. It is expected that the buyer of this product will use it to formulate their own user manual for their end product and a user manual specifically for the power adapter is not usually required. If a user manual is not specifically listed above then none will be provided with this unit.

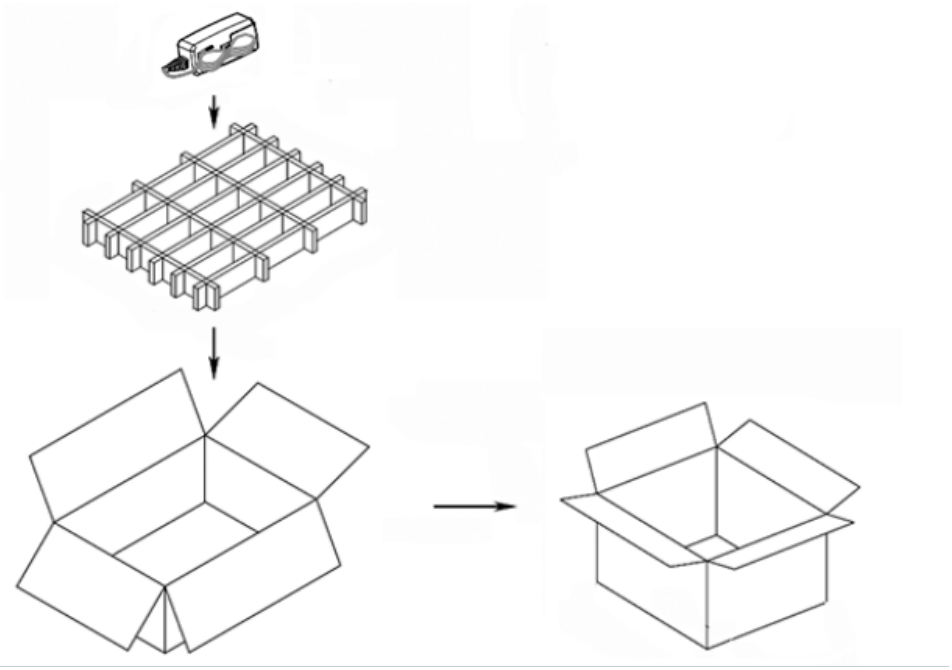

PROPRIETARY INFORMATION

PROPRIETARY OF GLOBTEK, INC. ANY REPRODUCTION, DISCLOSURE OR USE OF THIS DRAWING, IN WHOLE OR IN PART, IS HEREBY PROHIBITED EXCEPT AS SPECIFIED IN WRITING BY GLOBTEK, INC. © GlobTek, Inc. 2020 - 2022

guest /09/13/2022 8:32:05 AM CLONED FROM WR9HB2000CCPIMFR6B

INSTRUCTIONS TO THE OEM SYSTEMS ENGINEER

It is the responsibility of the OEM systems engineer to provide the end system user instructions and warnings for the use of this product in the end system.

If an input cord is required for this product, AC Mains voltage should be provided to the power supply by a power supply cord approved to the national standards of the country in which it will be used.

This product is not designed to be repaired. No serviceable parts inside. A blown internal fuse is an indication of catastrophic failure of circuit component(s). If a Failure Analysis is required for a failed power supply/battery charger, please return the damaged unit to GlobTek for an accurate determination of the root cause of the failure.

EMC Compliance of the complete OEM product, including the GlobTek power supply/battery charger needs to be verified by the OEM systems engineer.

INSTRUCTION SHEET

N/A

PROPRIETARY INFORMATION

PROPRIETARY OF GLOBTEK, INC. ANY REPRODUCTION, DISCLOSURE OR USE OF THIS DRAWING, IN WHOLE OR IN PART, IS HEREBY PROHIBITED EXCEPT AS SPECIFIED IN WRITING BY GLOBTEK, INC. © GlobTek, Inc. 2020 - 2022

guest /09/13/2022 8:32:05 AM CLONED FROM WR9HB2000CCPIMFR6B