GlobTek, Inc.
www.globtek.com
186 Veterans Drive,
Northvale, NJ 07647
Tel. (201) 784-1000
Fax (201) 784-0111

| | |
|---|---|
| Drawing Title: | GTM96300-3014.5-2.5-R3A, Medical/ICT/ITE/Household use Power Supply, Efficiency Level: USA DOE Level VI / Eco-design Directive 2009/125/EC, (EU) 2019/1782, Case Color/Style: GlobTek Black, Wall Plug-in+Desktop Combination, Regulated Switchmode AC-DC Power Supply AC Adaptor, Input Rating: 100-240V~, 50-60 Hz, IEC 60320/C6 w/ Wall Blades Option , Output Rating: 30W, 12.0V@2.5A, Output Configuration: 1830 mm, 18/1C + Shield Cond, UL 1185, Female Barrel 5.5 * 2.5 * 11mm with internal Spring Clip and Locking Notch or Equal, Ferrite: Core Size: 14.2*28.5*8.2, GlobTek Black, GT Cord # C0446, Pin Out: Center Positive (+V), symbol compliant with IEC 60417 symbol no. 5926, Blades/Input Cord: (Order Separately), Approvals: CCC (up to 48V only); CB 62368; CB 60950; ETL 1310; ETL; ETL; 230V CoC Tier 2; EAC; ETL 62368; UKCA; LPS 62368; UL 1310; Conforms to 62368-1; RCM; cETLus 60950-1; UL 1310; cETLus 60950-1; cETLus 60601; Morocco; RCM; S-Mark 62368; IRAM; NOM (5V only); Korea (5, 5.4, 5.95, 7.5V Only); CAN ICES-3; FCC; cETLus 60601-1 3rd; CB 60335; IP40; LPS 60950; Class I; Fuse 60335; Book 60601; cETLus 60950; Fuse 60335; S-Mark IEC/EN 60601-1; PSE; PSE; PSE; CE; China RoHS; Level VI; RoHS; Ukraine; VCCI; WEEE; CB 60601-1;cETLus; S-Mark 60950; |
| Model No. | GTM96300-3014.5-2.5-R3A |
| Part No./Ordering No. | RR9LE2500LCPCIM(R6B) — Rev C1 |

In Addition to GlobTek Inc.'s renewed ISO9001:2015 - Quality Management System Certification, GlobTek Inc. is now certified to:

ISO13485:2016 - Medical Devices Quality Management System Certification
ISO14001:2015 - Environmental Management System Certification

ISO Certificates are available online at https://www.globtek.com/iso-certificates/

The acceptance of this specification and use of the product described in this document indicates the acceptance and binding of the customer to Globtek TERMS AND CONDITIONS (attached to the end of this document), which supersede all other agreements, terms, and conditions (https://en.globtek.com/terms-and-conditions/).

The purchaser of this product (Customer) agrees that it is their sole responsibility to determine suitability/fitness of the product described in this specification for their application and to take precautions for protection against any hazards attendant to the handling and use of the product.

Footnote:

GlobTek Inc. will not be liable for the safety and performance of these power supplies/battery packs if unauthorized access and repair occurs. End user should consult applicable UL, CSA or EN standards for proper installation instruction.

Limitation of Use:

GlobTek products are intended for use with commercial, medical, and/or industrial equipment only. GlobTek product are not authorized for use as mission critical components in life support hazardous environment, nuclear or aircraft applications without prior written approval from the CEO of GlobTek Inc.
Contents of this document are subject to change without prior notice.

## Customer Approval of Specification:

Please approve, sign and send back to GlobTek so we can complete order processing.
A delay in receipt of this form will delay delivery schedule.

| | |
|---|---|
| Company Name: | Customer P/N: |
| Quote Number: | Date: |
| Authorized Representative Name: | Authorized Representative Signature: |

PROPRIETARY INFORMATION
PROPRIETARY OF GLOBTEK, INC. ANY REPRODUCTION, DISCLOSURE OR USE OF THIS DRAWING, IN WHOLE OR IN PART, IS HEREBY PROHIBITED EXCEPT AS SPECIFIED IN WRITING BY GLOBTEK, INC. © GlobTek, Inc. 2016 - 2022
guest /09/13/2022 7:22:52 AM CLONED FROM RR9KA6000C9PCIM(RVB

GlobTek, Inc.
www.globtek.com
186 Veterans Drive,
Northvale, NJ 07647
Tel. (201) 784-1000
Fax (201) 784-0111

Drawing Title: GTM96300-3014.5-2.5-R3A, Medical/ICT/ITE/Household use Power Supply, Efficiency Level: USA DOE Level VI / Eco-design Directive 2009/125/EC, (EU) 2019/1782, Case Color/Style: GlobTek Black, Wall Plug-in+Desktop Combination, Regulated Switchmode AC-DC Power Supply AC Adaptor, Input Rating: 100-240V~, 50-60 Hz, IEC 60320/C6 w/ Wall Blades Option , Output Rating: 30W, 12.0V@2.5A, Output Configuration: 1830 mm, 18/1C + Shield Cond, UL 1185, Female Barrel 5.5 * 2.5 * 11mm with internal Spring Clip and Locking Notch or Equal, Ferrite: Core Size: 14.2*28.5*8.2, GlobTek Black, GT Cord # C0446, Pin Out: Center Positive (+V), symbol compliant with IEC 60417 symbol no. 5926, Blades/Input Cord: (Order Separately), Approvals: CCC (up to 48V only); CB 62368; CB 60950; ETL 1310; ETL; ETL; 230V CoC Tier 2; EAC; ETL 62368; UKCA; LPS 62368; UL 1310; Conforms to 62368-1; RCM; cETLus 60950-1; UL 1310; cETLus 60950-1; cETLus 60601; Morocco; RCM; S-Mark 62368; IRAM; NOM (5V only); Korea (5, 5.4, 5.95, 7.5V Only); CAN ICES-3; FCC; cETLus 60601-1 3rd; CB 60335; IP40; LPS 60950; Class I; Fuse 60335; Book 60601; cETLus 60950; Fuse 60335; S-Mark IEC/EN 60601-1; PSE; PSE; PSE; CE; China RoHS; Level VI; RoHS; Ukraine; VCCI; WEEE; CB 60601-1;cETLus; S-Mark 60950;

Model No. GTM96300-3014.5-2.5-R3A

Part No./Ordering No. RR9LE2500LCPCIM(R6B) Rev C1

# REVISION HISTORY

| REV | DESCRIPTION | SUB | DATE | APPROVED |
|---|---|---|---|---|
| C1 | Update label specs to ISO 15223 medical device compliant label, add Morocco, EAC approvals, update CCC, Ukraine, Rohs | QA | 07/29/2020 | QA |
| C | Update approval: 60950 ETL and 60601 S-Mark, book, fuse link mark, IP40, LPS, and ground mark | rchiu | 04/27/2017 | QA |
| B | Updating approvals: CCC, CE, ETL, Circle 30, FCC CAN ICES-3(B)/NMB-3(B), Indoor Use Only, PSE, Efficiency Level VI, RCM, RoHS2, S-Mark, Ukraine, VCCI, and WEEE.<br>Updating Grounding Configuration: Earthed output (Option 1)<br>Updating Electrical Specification | rchiu | 04/25/2017 | QA |
| A | Initial Release | sorec | 01/18/2016 | QA |

## POWER SUPPLY INFORMATION

| | |
|---|---|
| TYPE: | Wall Plug-in+Desktop Combination |
| TECHNOLOGY: | Regulated Switchmode AC-DC Power Supply AC Adaptor |
| CASE COLOR: | GlobTek Black |
| NAMEPLATE RATED INPUT: | 100-240V~, 50-60 Hz, 1.0A |
| INPUT CONFIG: | IEC 60320/C6 w/ Wall Blades Option |
| WATTS: | 30.0 |
| VOLTS OUT: | 12.0 |
| CURRENT OUT (Amps): | 2.5 |
| BLADE/CORD INCLUDED: | None (Order Separately) |
| BLADE/CORD INSTALLED: | None :(Order Separately) |
| INGRESS PROTECTION: | IP40 (cord), IP52(R-blades) |
| GROUNDING CONFIGURATION: | (E1) Earthed output |
| EFFICIENCY LEVEL: | USA DOE Level VI / Eco-design Directive 2009/125/EC, (EU) 2019/1782 - Europe Code of Conduct on Energy Efficiency of External Power Supplies - Version 5 |
| OUTPUT CONFIGURATION: | 1830 mm, 18/1C + Shield Cond, UL 1185, Female Barrel 5.5 * 2.5 * 11mm with internal Spring Clip and Locking Notch or Equal, Ferrite: Core Size: 14.2*28.5*8.2, GlobTek Black, GT Cord # C0446 |
| OVERMOLDED: | Yes |
| OUTPUT CONNECTOR GENDER: | Female |
| CONNECTOR PIN OUT: | Center Positive (+V), symbol compliant with IEC 60417 symbol no. 5926 |
| LABEL SPECS: | ISO 15223 medical device compliant label,L-1470 |
| SPECIAL BARCODE LABEL MATERIAL: | No |
| PACK SPEC: | Standard DT, Individually Box |
| USER MANUAL: | |

PROPRIETARY INFORMATION
PROPRIETARY OF GLOBTEK, INC. ANY REPRODUCTION, DISCLOSURE OR USE OF THIS DRAWING, IN WHOLE OR IN PART, IS HEREBY PROHIBITED EXCEPT AS SPECIFIED IN WRITING BY GLOBTEK, INC. © GlobTek, Inc. 2016 - 2022
guest /09/13/2022 7:22:52 AM CLONED FROM RR9KA6000C9PCIM(RVB

GlobTek, Inc.
www.globtek.com
186 Veterans Drive,
Northvale, NJ 07647
Tel. (201) 784-1000
Fax (201) 784-0111

| | |
|---|---|
| Drawing Title: GTM96300-3014.5-2.5-R3A, Medical/ICT/ITE/Household use Power Supply, Efficiency Level: USA DOE Level VI / Eco-design Directive 2009/125/EC, (EU) 2019/1782, Case Color/Style: GlobTek Black, Wall Plug-in+Desktop Combination, Regulated Switchmode AC-DC Power Supply AC Adaptor, Input Rating: 100-240V~, 50-60 Hz, IEC 60320/C6 w/ Wall Blades Option , Output Rating: 30W, 12.0V@2.5A, Output Configuration: 1830 mm, 18/1C + Shield Cond, UL 1185, Female Barrel 5.5 * 2.5 * 11mm with internal Spring Clip and Locking Notch or Equal, Ferrite: Core Size: 14.2*28.5*8.2, GlobTek Black, GT Cord # C0446, Pin Out: Center Positive (+V), symbol compliant with IEC 60417 symbol no. 5926, Blades/Input Cord: (Order Separately), Approvals: CCC (up to 48V only); CB 62368; CB 60950; ETL 1310; ETL; ETL; 230V CoC Tier 2; EAC; ETL 62368; UKCA; LPS 62368; UL 1310; Conforms to 62368-1; RCM; cETLus 60950-1; UL 1310; cETLus 60950-1; cETLus 60601; Morocco; RCM; S-Mark 62368; IRAM; NOM (5V only); Korea (5, 5.4, 5.95, 7.5V Only); CAN ICES-3; FCC; cETLus 60601-1 3rd; CB 60335; IP40; LPS 60950; Class I; Fuse 60335; Book 60601; cETLus 60950; Fuse 60335; S-Mark IEC/EN 60601-1; PSE; PSE; PSE; CE; China RoHS; Level VI; RoHS; Ukraine; VCCI; WEEE; CB 60601-1;cETLus; S-Mark 60950; | |
| Model No. GTM96300-3014.5-2.5-R3A | |
| Part No./Ordering No. RR9LE2500LCPCIM(R6B) | Rev C1 |

Notes/Modifications/Customizations (notes in this section supersede the values shown in the standard spec):

DIMENSIONS ARE IN MM UNLESS SPECIFIED OTHERWISE.

PROPRIETARY INFORMATION
PROPRIETARY OF GLOBTEK, INC. ANY REPRODUCTION, DISCLOSURE OR USE OF THIS DRAWING, IN WHOLE OR IN PART, IS HEREBY PROHIBITED EXCEPT AS SPECIFIED IN WRITING BY GLOBTEK, INC. © GlobTek, Inc. 2016 - 2022
guest /09/13/2022 7:22:52 AM CLONED FROM RR9KA6000C9PCIM(RVB

GlobTek, Inc.
www.globtek.com
186 Veterans Drive,
Northvale, NJ 07647
Tel. (201) 784-1000
Fax (201) 784-0111

Drawing Title: GTM96300-3014.5-2.5-R3A, Medical/ICT/ITE/Household use Power Supply, Efficiency Level: USA DOE Level VI / Eco-design Directive 2009/125/EC, (EU) 2019/1782, Case Color/Style: GlobTek Black, Wall Plug-in+Desktop Combination, Regulated Switchmode AC-DC Power Supply AC Adaptor, Input Rating: 100-240V~, 50-60 Hz, IEC 60320/C6 w/ Wall Blades Option , Output Rating: 30W, 12.0V@2.5A, Output Configuration: 1830 mm, 18/1C + Shield Cond, UL 1185, Female Barrel 5.5 * 2.5 * 11mm with internal Spring Clip and Locking Notch or Equal, Ferrite: Core Size: 14.2*28.5*8.2, GlobTek Black, GT Cord # C0446, Pin Out: Center Positive (+V), symbol compliant with IEC 60417 symbol no. 5926, Blades/Input Cord: (Order Separately), Approvals: CCC (up to 48V only); CB 62368; CB 60950; ETL 1310; ETL; ETL; 230V CoC Tier 2; EAC; ETL 62368; UKCA; LPS 62368; UL 1310; Conforms to 62368-1; RCM; cETLus 60950-1; UL 1310; cETLus 60950-1; cETLus 60601; Morocco; RCM; S-Mark 62368; IRAM; NOM (5V only); Korea (5, 5.4, 5.95, 7.5V Only); CAN ICES-3; FCC; cETLus 60601-1 3rd; CB 60335; IP40; LPS 60950; Class I; Fuse 60335; Book 60601; cETLus 60950; Fuse 60335; S-Mark IEC/EN 60601-1; PSE; PSE; PSE; CE; China RoHS; Level VI; RoHS; Ukraine; VCCI; WEEE; CB 60601-1;cETLus; S-Mark 60950;

Model No. GTM96300-3014.5-2.5-R3A

Part No./Ordering No. RR9LE2500LCPCIM(R6B) Rev C1

## ELECTRICAL SPECIFICATIONS

A) ELECTRICAL SPECIFICATIONS:

01. Input Voltage: Specified 90-264 Vac, Nameplate rated: 100-240Vac
    90-264 Vac range @ 100% of rated load current
    85-264 Vac range @ 85% of rated load current
    110-370 VDC range @ 100% of rated load current
02. Input Frequency: Specified 47-63 Hz, Nameplate rated 50-60Hz
03. Output Regulation: +/- 5% measured at the output connector
04. Line Voltage Regulation: +/- 0.5% typical measured at full load
05. Green Power On Indicator LED
06. Output Ripple (Vp-p): 1% or 100 mV whichever is greater, measured at 20 MHz bandwidth with 0.1 uf ceramic capacitor in parallel with a low impedance 47 uf electrolytic capacitor connected at the end of the output connector
07. Turn-ON/OFF Overshoot: 5% maximum, 1 mS typical recovery time for 40% to 70% step load
08. Turn-ON Delay: 1 second maximum @ full load, nominal line
09. Hold-Up Time: 8 mS typical @ nominal input voltage and full load
10. Inrush Current: 30A/60A maximum cold start @ 115/230Vac input
11. Efficiency: Compliant with Efficiency Level VI and CoC Tier 2 standards
12. No Load Standby Power: <0.075 W @ 230Vac

B) PROTECTION

01. Input Protection: Input line fusing and 300Vac MOV
02. Short Circuit/ Overload: Electronically Protected unit will auto recover upon removal of fault
    Output Current Limit: 110% to 160% of rated output current
    (upper end of current limit range is determined by normal output power rating,
    not derated output power level)
03. Output Over-Voltage: 110% to 130% of nominal output voltage

C) SAFETY

01. Dielectric Withstand Voltage: 4000Vac or 5656Vdc from input to output,
On Class I models, 3000Vac or 4242Vdc from input to earth
02. Earth Leakage Current: Class I models < 300uA, N/A for Class II models
03. Touch Current: Class I models < 20uA, Class II models < 75uA
04. Earth Continuity Test: < 0.1 Ohm between Earth Pin at AC input and PCB termination point (Class I models only)
05. Means of Protection: 2 x MOPP
06. Compliant Standards: See listings at end of this drawing for specifics
07. Output Isolation Options:
  a) C8 or C18 Inlet, Class II
  b) C6 or C14 Inlet, Class II FE, Output Isolated from Earth contact
  c) C6 or C14 Inlet, Class I, Output negative directly attached to Earth contact

D) EMC

EN 60601-1-2, 4th edition
Emissions, per EN 55032, EN 61000-6-3, EN 61000-6-4, CISPR11 and CISPR22
  Conducted Emissions: Class B, FCC Part 15, Class B
  Radiated Emissions: Class B, FCC Part 15, Class B

PROPRIETARY INFORMATION
PROPRIETARY OF GLOBTEK, INC. ANY REPRODUCTION, DISCLOSURE OR USE OF THIS DRAWING, IN WHOLE OR IN PART, IS HEREBY PROHIBITED EXCEPT AS SPECIFIED IN WRITING BY GLOBTEK, INC. © GlobTek, Inc. 2016 - 2022
guest /09/13/2022 7:22:52 AM CLONED FROM RR9KA6000C9PCIM(RVB

Line Frequency Harmonics EN61000-3-2, Class A
Voltage Fluctuations/Flicker EN61000-3-3

Immunity, per EN 55024, EN 61000-6-1, EN 61000-6-2
Static Discharge Immunity EN61000-4-2, 10kV Contact Discharge, 20kV air discharge
Radiated RF Immunity EN61000-4-3, 10V/m 80-1000MHz, 3V/m 1-2.7GHz, 80% 1KHz AM.
EFT/Burst Immunity EN61000-4-4, 4kV/100kHz.
Line Surge Immunity EN61000-4-5, 2kV differential, 4kV common-mode
Conducted RF Immunity EN61000-4-6, 3Vrms, 80% 1KHz AM
Power Frequency Magnetic Field Immunity EN61000-4-8, 3A/m
Voltage Dip Immunity EN61000-4-11, Performance Criteria B/C

## E) OTHER:

01. MTBF: 1,000,000 Hours @ 40°C ambient temperature, Full Load
02. GTM96300 Family: -10°C to 40°C ambient temperature with full load
    Regarding Operating Temperature,
    a- See below derating table for output power capability at alternate temperature
    b- Extended low end temperature range available as custom option
03. Operating Humidity: 0% to 95% relative humidity, non-condensing
04. Storage Temperature: -30°C to 80°C
05. Operating Altitude: 5000 Meters
06. ROHS: Compliant with latest regulations, see approvals section below

## F) ENCLOSURE

01. Housing: High impact plastic, 94V0 polycarbonate, non-vented
02. Markings: Label or Laser Printed
03. AC Input mechanical options: Desktop C6, C8, C14 or C18 IEC Inlet.
    Hybrid option (Desktop or Changeable Blade Wall Plug-in) Class I or Class II input

## G) SPECIAL OPTIONS

01. Cost reduction, removal of LED
02. Custom Cordsets, various cordage types, and connector types
03. Custom Markings
04. Short term Output Surge Capability
05. Reduced Leakage Current versions
06. Tightened output voltage tolerance
07. Reduced output ripple level
08. Reduced output power rating marking
09. High Rel PCB laminate with Plated through Holes for IPC610 Class 2 Compliance


PROPRIETARY INFORMATION
PROPRIETARY OF GLOBTEK, INC. ANY REPRODUCTION, DISCLOSURE OR USE OF THIS DRAWING, IN WHOLE OR IN PART, IS HEREBY PROHIBITED EXCEPT AS SPECIFIED IN WRITING BY GLOBTEK, INC. © GlobTek, Inc. 2016 - 2022
guest /09/13/2022 7:22:52 AM CLONED FROM RR9KA6000C9PCIM(RVB

10. Special Housing Colors and Cordset Colors
11. Quasi Constant Current Output, for Battery Charger Applications
12. Back EMF applications, custom solutions. For unusual motor load aps and other high inductance reverse energy flow requirements
13. Improved Ingress Protection Rating

---

TO ADDRESS SYSTEM-LEVEL EMI CONCERNS, FERRITE CHOKES/BEADS MAY BE ADDED/REVISED UPON REQUEST. A SAMPLE KIT OF GLOBTEK'S STANDARD FERRITES IS AVAILABLE UNDER GLOBTEK P/N: EMI-MITIGATION-KIT1

FOR ADDITIONAL INFORMATION, PLEASE READ OUR WHITE PAPER AT:
https://en.globtek.com/technical-articles/ferrite-kit-radiated-emi-suppression-kit-for-globtek-power-supplies-cable-assemblies

INGRESS PROTECTION: IP40 (cord), IP52(R-blades)


PROPRIETARY INFORMATION
PROPRIETARY OF GLOBTEK, INC. ANY REPRODUCTION, DISCLOSURE OR USE OF THIS DRAWING, IN WHOLE OR IN PART, IS HEREBY PROHIBITED EXCEPT AS SPECIFIED IN WRITING BY GLOBTEK, INC. © GlobTek, Inc. 2016 - 2022
guest /09/13/2022 7:22:52 AM CLONED FROM RR9KA6000C9PCIM(RVB

GlobTek, Inc.
www.globtek.com
186 Veterans Drive,
Northvale, NJ 07647
Tel. (201) 784-1000
Fax (201) 784-0111

| | |
|---|---|
| Drawing Title: GTM96300-3014.5-2.5-R3A, Medical/ICT/ITE/Household use Power Supply, Efficiency Level: USA DOE Level VI / Eco-design Directive 2009/125/EC, (EU) 2019/1782, Case Color/Style: GlobTek Black, Wall Plug-in+Desktop Combination, Regulated Switchmode AC-DC Power Supply AC Adaptor, Input Rating: 100-240V~, 50-60 Hz, IEC 60320/C6 w/ Wall Blades Option , Output Rating: 30W, 12.0V@2.5A, Output Configuration: 1830 mm, 18/1C + Shield Cond, UL 1185, Female Barrel 5.5 * 2.5 * 11mm with internal Spring Clip and Locking Notch or Equal, Ferrite: Core Size: 14.2*28.5*8.2, GlobTek Black, GT Cord # C0446, Pin Out: Center Positive (+V), symbol compliant with IEC 60417 symbol no. 5926, Blades/Input Cord: (Order Separately), Approvals: CCC (up to 48V only); CB 62368; CB 60950; ETL 1310; ETL; ETL; 230V CoC Tier 2; EAC; ETL 62368; UKCA; LPS 62368; UL 1310; Conforms to 62368-1; RCM; cETLus 60950-1; UL 1310; cETLus 60950-1; cETLus 60601; Morocco; RCM; S-Mark 62368; IRAM; NOM (5V only); Korea (5, 5.4, 5.95, 7.5V Only); CAN ICES-3; FCC; cETLus 60601-1 3rd; CB 60335; IP40; LPS 60950; Class I; Fuse 60335; Book 60601; cETLus 60950; Fuse 60335; S-Mark IEC/EN 60601-1; PSE; PSE; PSE; CE; China RoHS; Level VI; RoHS; Ukraine; VCCI; WEEE; CB 60601-1;cETLus; S-Mark 60950; | |
| Model No. GTM96300-3014.5-2.5-R3A | |
| Part No./Ordering No. RR9LE2500LCPCIM(R6B) | Rev C1 |

3D File Download https://www.globtek.com/dl/The%20outline%20drawing%20for%20GTM96300-R3%20with%20a%20led%20lens.igs

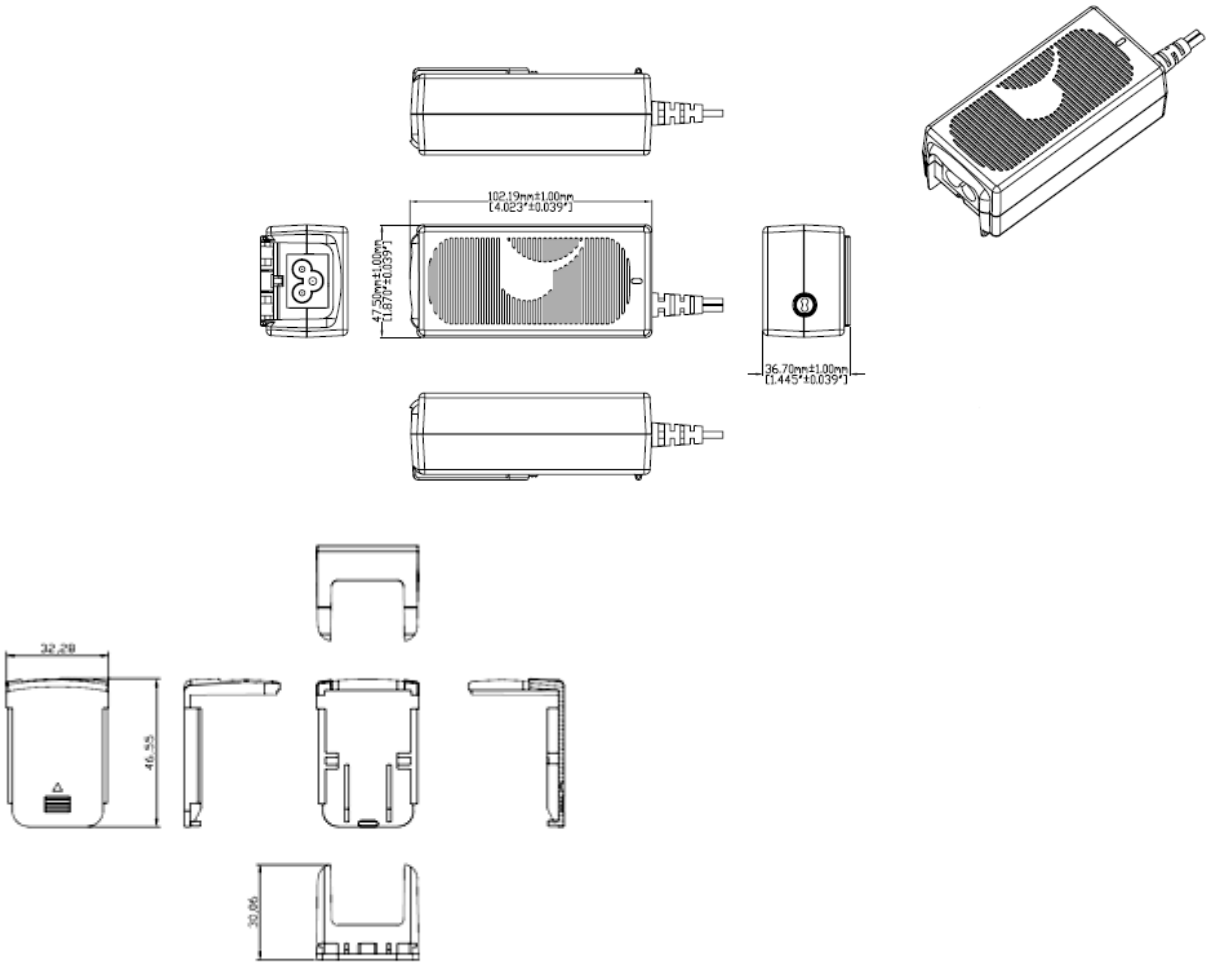


Units shipped without an installed input plug have a "desktop insert" installed.

PROPRIETARY INFORMATION
PROPRIETARY OF GLOBTEK, INC. ANY REPRODUCTION, DISCLOSURE OR USE OF THIS DRAWING, IN WHOLE OR IN PART, IS HEREBY PROHIBITED EXCEPT AS SPECIFIED IN WRITING BY GLOBTEK, INC. © GlobTek, Inc. 2016 - 2022
guest /09/13/2022 7:22:52 AM CLONED FROM RR9KA6000C9PCIM(RVB

GlobTek, Inc.
www.globtek.com
186 Veterans Drive,
Northvale, NJ 07647
Tel. (201) 784-1000
Fax (201) 784-0111

Drawing Title: GTM96300-3014.5-2.5-R3A, Medical/ICT/ITE/Household use Power Supply, Efficiency Level: USA DOE Level VI / Eco-design Directive 2009/125/EC, (EU) 2019/1782, Case Color/Style: GlobTek Black, Wall Plug-in+Desktop Combination, Regulated Switchmode AC-DC Power Supply AC Adaptor, Input Rating: 100-240V~, 50-60 Hz, IEC 60320/C6 w/ Wall Blades Option , Output Rating: 30W, 12.0V@2.5A, Output Configuration: 1830 mm, 18/1C + Shield Cond, UL 1185, Female Barrel 5.5 * 2.5 * 11mm with internal Spring Clip and Locking Notch or Equal, Ferrite: Core Size: 14.2*28.5*8.2, GlobTek Black, GT Cord # C0446, Pin Out: Center Positive (+V), symbol compliant with IEC 60417 symbol no. 5926, Blades/Input Cord: (Order Separately), Approvals: CCC (up to 48V only); CB 62368; CB 60950; ETL 1310; ETL; ETL; 230V CoC Tier 2; EAC; ETL 62368; UKCA; LPS 62368; UL 1310; Conforms to 62368-1; RCM; cETLus 60950-1; UL 1310; cETLus 60950-1; cETLus 60601; Morocco; RCM; S-Mark 62368; IRAM; NOM (5V only); Korea (5, 5.4, 5.95, 7.5V Only); CAN ICES-3; FCC; cETLus 60601-1 3rd; CB 60335; IP40; LPS 60950; Class I; Fuse 60335; Book 60601; cETLus 60950; Fuse 60335; S-Mark IEC/EN 60601-1; PSE; PSE; PSE; CE; China RoHS; Level VI; RoHS; Ukraine; VCCI; WEEE; CB 60601-1;cETLus; S-Mark 60950;

Model No. GTM96300-3014.5-2.5-R3A

Part No./Ordering No. RR9LE2500LCPCIM(R6B) Rev C1

## DERATING CURVE

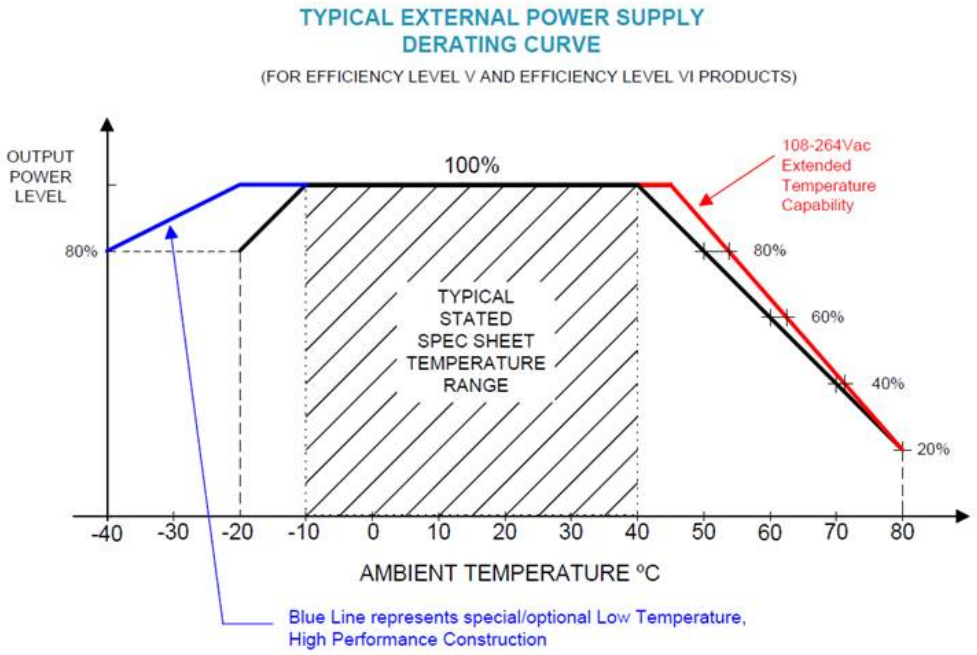


PROPRIETARY INFORMATION
PROPRIETARY OF GLOBTEK, INC. ANY REPRODUCTION, DISCLOSURE OR USE OF THIS DRAWING, IN WHOLE OR IN PART, IS HEREBY PROHIBITED EXCEPT AS SPECIFIED IN WRITING BY GLOBTEK, INC. © GlobTek, Inc. 2016 - 2022
guest /09/13/2022 7:22:52 AM CLONED FROM RR9KA6000C9PCIM(RVB

GlobTek, Inc.
www.globtek.com
186 Veterans Drive,
Northvale, NJ 07647
Tel. (201) 784-1000
Fax (201) 784-0111

| | |
|---|---|
| Drawing Title: GTM96300-3014.5-2.5-R3A, Medical/ICT/ITE/Household use Power Supply, Efficiency Level: USA DOE Level VI / Eco-design Directive 2009/125/EC, (EU) 2019/1782, Case Color/Style: GlobTek Black, Wall Plug-in+Desktop Combination, Regulated Switchmode AC-DC Power Supply AC Adaptor, Input Rating: 100-240V~, 50-60 Hz, IEC 60320/C6 w/ Wall Blades Option , Output Rating: 30W, 12.0V@2.5A, Output Configuration: 1830 mm, 18/1C + Shield Cond, UL 1185, Female Barrel 5.5 * 2.5 * 11mm with internal Spring Clip and Locking Notch or Equal, Ferrite: Core Size: 14.2*28.5*8.2, GlobTek Black, GT Cord # C0446, Pin Out: Center Positive (+V), symbol compliant with IEC 60417 symbol no. 5926, Blades/Input Cord: (Order Separately), Approvals: CCC (up to 48V only); CB 62368; CB 60950; ETL 1310; ETL; ETL; 230V CoC Tier 2; EAC; ETL 62368; UKCA; LPS 62368; UL 1310; Conforms to 62368-1; RCM; cETLus 60950-1; UL 1310; cETLus 60950-1; cETLus 60601; Morocco; RCM; S-Mark 62368; IRAM; NOM (5V only); Korea (5, 5.4, 5.95, 7.5V Only); CAN ICES-3; FCC; cETLus 60601-1 3rd; CB 60335; IP40; LPS 60950; Class I; Fuse 60335; Book 60601; cETLus 60950; Fuse 60335; S-Mark IEC/EN 60601-1; PSE; PSE; PSE; CE; China RoHS; Level VI; RoHS; Ukraine; VCCI; WEEE; CB 60601-1;cETLus; S-Mark 60950; | |
| Model No. GTM96300-3014.5-2.5-R3A | |
| Part No./Ordering No. RR9LE2500LCPCIM(R6B) | Rev C1 |

## INPUT CONFIGURATION

(E1) Earthed output

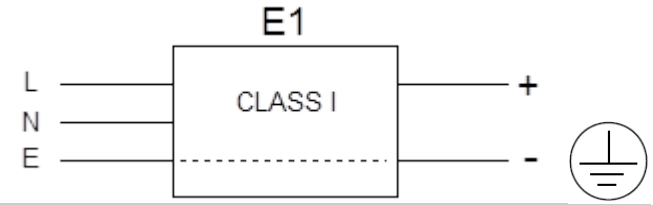


Alternate grounding configurations available upon request.

Blades/Cord Included:None:(Order Separately)

Blades/Cord Installed:None:(Order Separately)

IEC 60320/C6 AC Inlet Connector, Class I, Earth Ground ( aka "Mickey Mouse")

Blade Insertion Instructions
R-Blade Style Instruction Video

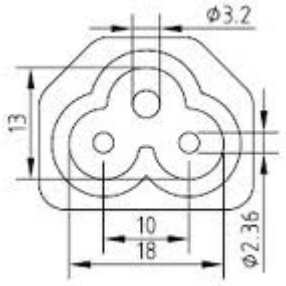


Mates with IEC 60320/C5 Plug
This series of Interchangeable Blade products may be used with Proprietary Interchangeable Blades as described below or with standard international power cords.

Optional INPUT BLADES: R-Socket: below are available blades configurations which are "not included" (unless stated above); may be purchased separately, packaged with power supply, or as a separate "R-KIT" if specified

1. Class I model NEMA 5-15P (Type B), Class I AC power plug with 2 blades & ground pin, R-NA-3(R)
2. Australian AS 3112 (Type I) configuration: SAA 3 pins Class I, R-SAA-3(R)
3. UK BS 1363 (Type G) configuration: UK 3 pins (Ground) Class I, R-UK-3(R)
4. European CEE 7/7 (Type E and F) configuration: European plug 2 PINS + ground, Class I, R-EU-3(R)
5. Desktop Insert

PROPRIETARY INFORMATION
PROPRIETARY OF GLOBTEK, INC. ANY REPRODUCTION, DISCLOSURE OR USE OF THIS DRAWING, IN WHOLE OR IN PART, IS HEREBY PROHIBITED EXCEPT AS SPECIFIED IN WRITING BY GLOBTEK, INC. © GlobTek, Inc. 2016 - 2022
guest /09/13/2022 7:22:52 AM CLONED FROM RR9KA6000C9PCIM(RVB

GlobTek, Inc.
www.globtek.com
186 Veterans Drive,
Northvale, NJ 07647
Tel. (201) 784-1000
Fax (201) 784-0111

Drawing Title: GTM96300-3014.5-2.5-R3A, Medical/ICT/ITE/Household use Power Supply, Efficiency Level: USA DOE Level VI / Eco-design Directive 2009/125/EC, (EU) 2019/1782, Case Color/Style: GlobTek Black, Wall Plug-in+Desktop Combination, Regulated Switchmode AC-DC Power Supply AC Adaptor, Input Rating: 100-240V~, 50-60 Hz, IEC 60320/C6 w/ Wall Blades Option , Output Rating: 30W, 12.0V@2.5A, Output Configuration: 1830 mm, 18/1C + Shield Cond, UL 1185, Female Barrel 5.5 * 2.5 * 11mm with internal Spring Clip and Locking Notch or Equal, Ferrite: Core Size: 14.2*28.5*8.2, GlobTek Black, GT Cord # C0446, Pin Out: Center Positive (+V), symbol compliant with IEC 60417 symbol no. 5926, Blades/Input Cord: (Order Separately), Approvals: CCC (up to 48V only); CB 62368; CB 60950; ETL 1310; ETL; ETL; 230V CoC Tier 2; EAC; ETL 62368; UKCA; LPS 62368; UL 1310; Conforms to 62368-1; RCM; cETLus 60950-1; UL 1310; cETLus 60950-1; cETLus 60601; Morocco; RCM; S-Mark 62368; IRAM; NOM (5V only); Korea (5, 5.4, 5.95, 7.5V Only); CAN ICES-3; FCC; cETLus 60601-1 3rd; CB 60335; IP40; LPS 60950; Class I; Fuse 60335; Book 60601; cETLus 60950; Fuse 60335; S-Mark IEC/EN 60601-1; PSE; PSE; PSE; CE; China RoHS; Level VI; RoHS; Ukraine; VCCI; WEEE; CB 60601-1;cETLus; S-Mark 60950;

Model No. GTM96300-3014.5-2.5-R3A

Part No./Ordering No. RR9LE2500LCPCIM(R6B) Rev C1

Kits
05. R-KIT-3(R) 1,2,3,4 above
06. R-KIT-3-INTL(R): 2,3,4 above

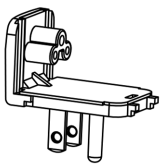

UL 3P
P/N: R-NA-3(R)
NORTH AMERICA
JAPAN

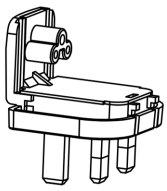

UK 3P
P/N: R-UK-3(R)
UNITED KINGDOM
HONG KONG
SINGAPORE

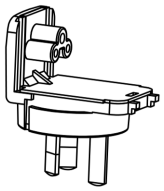

AUS 3P
P/N: R-SAA-3(R)
AUSTRALIA

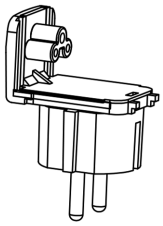

EU 3P
P/N: R-EU-3(R)
EUROPE
SOUTH AMERICA

Below are standard cordsets which are "not included" (unless stated above); these can be purchased separately or package with the power supply. Contact your Sales Engineer if the style required is not shown below. Many more available in different lengths, colors or cable material.

Standard International IEC 320/C5 Cordsets

| Part Number / Link | Country | Plug | Connector | Length (mm) | Length (ft) |
|---|---|---|---|---|---|
| 3021066F712(R) | N. American (Type B) | NEMA 5-15P | IEC 320/C5 | 1880 | 6 |
| 1191068F0712(R) | N. American (Type B) | NEMA 5-15P Hospital | IEC 320/C5 | 2459 | 8 |
| 2194262M0712(R) | Argentina (Type I) | IRAM 2073 | IEC320/C5 | 2050 | 6.7 |
| 2064262M0712(R) | Australian (Type I) | AS3112 / 3 PRONG | IEC 320/C5 | 2000 | 6.6 |
| 204B4262M0712(R) | Brazil (Type N) | BRAZIL | IEC 320/C5 | 2000 | 6.6 |
| 6023592M5712(R) | China (Type I) | CCC GR2099 | IEC 320/C5 | 2500 | 8 |
| 23144262M0712(R) | Europe (Type E) | CEE 7/7 | IEC 320/C5 | 2050 | 6.6 |
| 2313K3432M0712(R) | Korea (Type F) | KS C 8305 | IEC 320/C5 | 2000 | 6.6 |
| 205IN4262M0712(R) | India (Type D) | India IS 1293 (also known as IA16A3 or BS546) | IEC320/C5 | 2000 | 6.6 |
| 377C4262M0712(R) | Israel (Type H) | ISL | IEC320/C5 | 2050 | 6.7 |
| 23024262M0712(R) | Italy (Type L) | CEI 23-16/VII | IEC 320/C5 | 2000 | 6.6 |

PROPRIETARY INFORMATION
PROPRIETARY OF GLOBTEK, INC. ANY REPRODUCTION, DISCLOSURE OR USE OF THIS DRAWING, IN WHOLE OR IN PART, IS HEREBY PROHIBITED EXCEPT AS SPECIFIED IN WRITING BY GLOBTEK, INC. © GlobTek, Inc. 2016 - 2022
guest /09/13/2022 7:22:52 AM CLONED FROM RR9KA6000C9PCIM(RVB

| | | | | |
|---|---|---|---|---|
| 3003316F0712(R) | Japan (Type B) | JIS 8303 / 3 PINS | IEC 320/C5 1830 | 6 |
| 3021066F0712ULPSE(R) | Japan / USA (Type B) | JIS 8303 / 3 PINS + NEMA 5-15P | IEC 320/C5 1830 | 6 |
| 2054262M0712(R) | S. Africa (Type D) | South Africa SABS164-1 (6A type plug) | IEC320/C5 2050 | 6.7 |
| 2084262M0712(R) | S.Africa (Type M) | South Africa SABS164-1 (16A type plug) | IEC 320/C5 2000 | 6.6 |
| 23214262M0712(R) | Switzerland (Type J) | SEV 1011 ( EL 203) | IEC 320/C5 2000 | 6.6 |
| 3003316F0712(R) | Taiwan (Type B) | BSMI | IEC 320/C5 2000 | 6.6 |
| 6104262M0712(R) | UK, Hong Kong, Singapore, Gulf States (Type G) | BS1363 | IEC 320/C5 2000 | 6.6 |


PROPRIETARY INFORMATION

PROPRIETARY OF GLOBTEK, INC. ANY REPRODUCTION, DISCLOSURE OR USE OF THIS DRAWING, IN WHOLE OR IN PART, IS HEREBY PROHIBITED EXCEPT AS SPECIFIED IN WRITING BY GLOBTEK, INC. © GlobTek, Inc. 2016 - 2022

guest /09/13/2022 7:22:52 AM CLONED FROM RR9KA6000C9PCIM(RVB

GlobTek, Inc.
www.globtek.com
186 Veterans Drive,
Northvale, NJ 07647
Tel. (201) 784-1000
Fax (201) 784-0111

Drawing Title: GTM96300-3014.5-2.5-R3A, Medical/ICT/ITE/Household use Power Supply, Efficiency Level: USA DOE Level VI / Eco-design Directive 2009/125/EC, (EU) 2019/1782, Case Color/Style: GlobTek Black, Wall Plug-in+Desktop Combination, Regulated Switchmode AC-DC Power Supply AC Adaptor, Input Rating: 100-240V~, 50-60 Hz, IEC 60320/C6 w/ Wall Blades Option , Output Rating: 30W, 12.0V@2.5A, Output Configuration: 1830 mm, 18/1C + Shield Cond, UL 1185, Female Barrel 5.5 * 2.5 * 11mm with internal Spring Clip and Locking Notch or Equal, Ferrite: Core Size: 14.2*28.5*8.2, GlobTek Black, GT Cord # C0446, Pin Out: Center Positive (+V), symbol compliant with IEC 60417 symbol no. 5926, Blades/Input Cord: (Order Separately), Approvals: CCC (up to 48V only); CB 62368; CB 60950; ETL 1310; ETL; ETL; 230V CoC Tier 2; EAC; ETL 62368; UKCA; LPS 62368; UL 1310; Conforms to 62368-1; RCM; cETLus 60950-1; UL 1310; cETLus 60950-1; cETLus 60601; Morocco; RCM; S-Mark 62368; IRAM; NOM (5V only); Korea (5, 5.4, 5.95, 7.5V Only); CAN ICES-3; FCC; cETLus 60601-1 3rd; CB 60335; IP40; LPS 60950; Class I; Fuse 60335; Book 60601; cETLus 60950; Fuse 60335; S-Mark IEC/EN 60601-1; PSE; PSE; PSE; CE; China RoHS; Level VI; RoHS; Ukraine; VCCI; WEEE; CB 60601-1;cETLus; S-Mark 60950;

Model No. GTM96300-3014.5-2.5-R3A

Part No./Ordering No. RR9LE2500LCPCIM(R6B) | Rev C1

## OUTPUT CORD AND CONNECTOR: LCL/C0446

ACTUAL CONNECTORS, OVERMOLDS, FERRITES MAY VARY SLIGHTLY FROM THE PICTURE BELOW

| | |
|---|---|
| CABLE TYPE | UL 1185 |
| CABLE LENGTH (mm) | 1830 |
| CABLE TOLERANCE (mm) | +150,-0 |
| WIRE GAUGE (AWG) | 18 |
| CONDUCTORS | 1C + Shield |
| HANK DIMENSION (mm) | 80 +10 -10 |
| CABLE / CONNECTOR OVERMOLD COLOR | GlobTek Black |
| FERRITE TYPE / DIMENSION | Core Size: 14.2*28.5*8.2 |
| FERRITE # OF TURNS(Definition) | 2 Pass thru core (1 turns) |
| FERRITE DIMENSION FROM STRAIN RELIEF | 50 +10, -10 |
| FERRITE DIMENSION FROM PLUG | N/A |
| PLUG TYPE | Female Barrel 5.5 * 2.5 * 11mm with internal Spring Clip and Locking Notch or Equal |
| OUTPUT CONNECTOR GENDER | Female |
| OVERMOLDED | Yes |
| OVER MOLD ORIENTATION | Straight |
| CONNECTOR PIN OUT: | Center Positive (+V), symbol compliant with IEC 60417 symbol no. 5926 |
| ADDITIONAL REQUIREMENTS | |

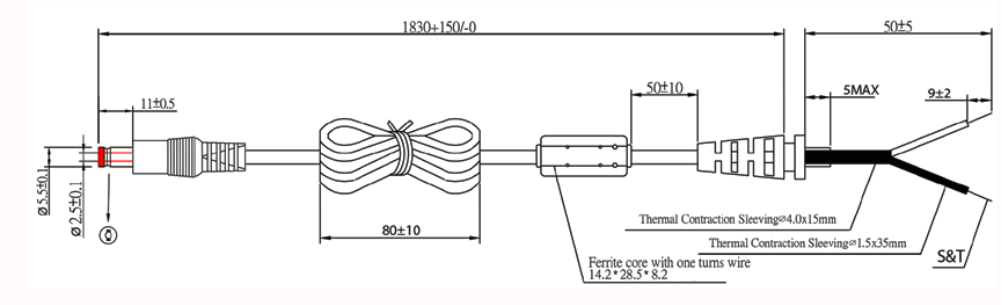


ADDITIONAL OUTPUT PLUG OPTIONS ARE AVAILABLE AT https://www.globtek.com/connectors/
STANDARD PLUGS AND CONNECTORS CAN BE SEEN ONLINE AT https://www.globtek.com/connectors/
CALCULATE VOLTAGE REGULATION/DROP WITH OUR ONLINE CALCULATOR: https://en.globtek.com/output-cable-regulation-calculator/

PROPRIETARY INFORMATION
PROPRIETARY OF GLOBTEK, INC. ANY REPRODUCTION, DISCLOSURE OR USE OF THIS DRAWING, IN WHOLE OR IN PART, IS HEREBY PROHIBITED EXCEPT AS SPECIFIED IN WRITING BY GLOBTEK, INC. © GlobTek, Inc. 2016 - 2022
guest /09/13/2022 7:22:52 AM CLONED FROM RR9KA6000C9PCIM(RVB

GlobTek, Inc.
www.globtek.com
186 Veterans Drive,
Northvale, NJ 07647
Tel. (201) 784-1000
Fax (201) 784-0111

| | |
|---|---|
| Drawing Title: GTM96300-3014.5-2.5-R3A, Medical/ICT/ITE/Household use Power Supply, Efficiency Level: USA DOE Level VI / Eco-design Directive 2009/125/EC, (EU) 2019/1782, Case Color/Style: GlobTek Black, Wall Plug-in+Desktop Combination, Regulated Switchmode AC-DC Power Supply AC Adaptor, Input Rating: 100-240V~, 50-60 Hz, IEC 60320/C6 w/ Wall Blades Option , Output Rating: 30W, 12.0V@2.5A, Output Configuration: 1830 mm, 18/1C + Shield Cond, UL 1185, Female Barrel 5.5 * 2.5 * 11mm with internal Spring Clip and Locking Notch or Equal, Ferrite: Core Size: 14.2*28.5*8.2, GlobTek Black, GT Cord # C0446, Pin Out: Center Positive (+V), symbol compliant with IEC 60417 symbol no. 5926, Blades/Input Cord: (Order Separately), Approvals: CCC (up to 48V only); CB 62368; CB 60950; ETL 1310; ETL; ETL; 230V CoC Tier 2; EAC; ETL 62368; UKCA; LPS 62368; UL 1310; Conforms to 62368-1; RCM; cETLus 60950-1; UL 1310; cETLus 60950-1; cETLus 60601; Morocco; RCM; S-Mark 62368; IRAM; NOM (5V only); Korea (5, 5.4, 5.95, 7.5V Only); CAN ICES-3; FCC; cETLus 60601-1 3rd; CB 60335; IP40; LPS 60950; Class I; Fuse 60335; Book 60601; cETLus 60950; Fuse 60335; S-Mark IEC/EN 60601-1; PSE; PSE; PSE; CE; China RoHS; Level VI; RoHS; Ukraine; VCCI; WEEE; CB 60601-1;cETLus; S-Mark 60950; | |
| Model No. GTM96300-3014.5-2.5-R3A | |
| Part No./Ordering No. RR9LE2500LCPCIM(R6B) | Rev C1 |

## OUTPUT CONNECTOR HOOK UP

TO ADDRESS SYSTEM-LEVEL EMI CONCERNS, FERRITE CHOKES/BEADS MAY BE ADDED/REVISED UPON REQUEST. A SAMPLE KIT OF GLOBTEK'S STANDARD FERRITES IS AVAILABLE UNDER GLOBTEK P/N: EMI-MITIGATION-KIT1

FOR ADDITIONAL INFORMATION, PLEASE READ OUR WHITE PAPER AT:
https://en.globtek.com/technical-articles/ferrite-kit-radiated-emi-suppression-kit-for-globtek-power-supplies-cable-assemblies

PROPRIETARY INFORMATION
PROPRIETARY OF GLOBTEK, INC. ANY REPRODUCTION, DISCLOSURE OR USE OF THIS DRAWING, IN WHOLE OR IN PART, IS HEREBY PROHIBITED EXCEPT AS SPECIFIED IN WRITING BY GLOBTEK, INC. © GlobTek, Inc. 2016 - 2022
guest /09/13/2022 7:22:52 AM CLONED FROM RR9KA6000C9PCIM(RVB

GlobTek, Inc.
www.globtek.com
186 Veterans Drive,
Northvale, NJ 07647
Tel. (201) 784-1000
Fax (201) 784-0111

Drawing Title: GTM96300-3014.5-2.5-R3A, Medical/ICT/ITE/Household use Power Supply, Efficiency Level: USA DOE Level VI / Eco-design Directive 2009/125/EC, (EU) 2019/1782, Case Color/Style: GlobTek Black, Wall Plug-in+Desktop Combination, Regulated Switchmode AC-DC Power Supply AC Adaptor, Input Rating: 100-240V~, 50-60 Hz, IEC 60320/C6 w/ Wall Blades Option , Output Rating: 30W, 12.0V@2.5A, Output Configuration: 1830 mm, 18/1C + Shield Cond, UL 1185, Female Barrel 5.5 * 2.5 * 11mm with internal Spring Clip and Locking Notch or Equal, Ferrite: Core Size: 14.2*28.5*8.2, GlobTek Black, GT Cord # C0446, Pin Out: Center Positive (+V), symbol compliant with IEC 60417 symbol no. 5926, Blades/Input Cord: (Order Separately), Approvals: CCC (up to 48V only); CB 62368; CB 60950; ETL 1310; ETL; ETL; 230V CoC Tier 2; EAC; ETL 62368; UKCA; LPS 62368; UL 1310; Conforms to 62368-1; RCM; cETLus 60950-1; UL 1310; cETLus 60950-1; cETLus 60601; Morocco; RCM; S-Mark 62368; IRAM; NOM (5V only); Korea (5, 5.4, 5.95, 7.5V Only); CAN ICES-3; FCC; cETLus 60601-1 3rd; CB 60335; IP40; LPS 60950; Class I; Fuse 60335; Book 60601; cETLus 60950; Fuse 60335; S-Mark IEC/EN 60601-1; PSE; PSE; PSE; CE; China RoHS; Level VI; RoHS; Ukraine; VCCI; WEEE; CB 60601-1;cETLus; S-Mark 60950;

Model No. GTM96300-3014.5-2.5-R3A

Part No./Ordering No. RR9LE2500LCPCIM(R6B) Rev C1

## LABEL:L-1470

| | |
|---|---|
| LABEL P/N: | ISO 15223 medical device compliant label |
| MATERIAL: | Flat Thermal Transfer, Imprintable, Polyester Label and/or Pad Printed and/or Molded, and/or Laser Engraved in the case |
| BACKGROUND COLOR: | Black if housing is Black, White or Silver if housing is White or Gray. |
| TEXT COLOR: | White or Silver if label is Black Background for Black housing. Black if label is White or Silver background and Housing is White or Gray. |
| LABEL WIDTH (mm): | 37.5 |
| LABEL HEIGHT (mm): | 33.5 |
| SPECIAL BARCODE LABEL MATERIAL: | No |

Below is the minimum information which will appear on the label. NOTE: in the logo area additional/actual positioning of symbols and text is subjected to change as per agency updates/requirements or additional model approvals become available.
Agency logos may be in Regulatory Certifications/Label Markings area on the label or molded into the case housing outside the label area. Information will be shown via Label and/or Pad Printed and/or Molded in the case.

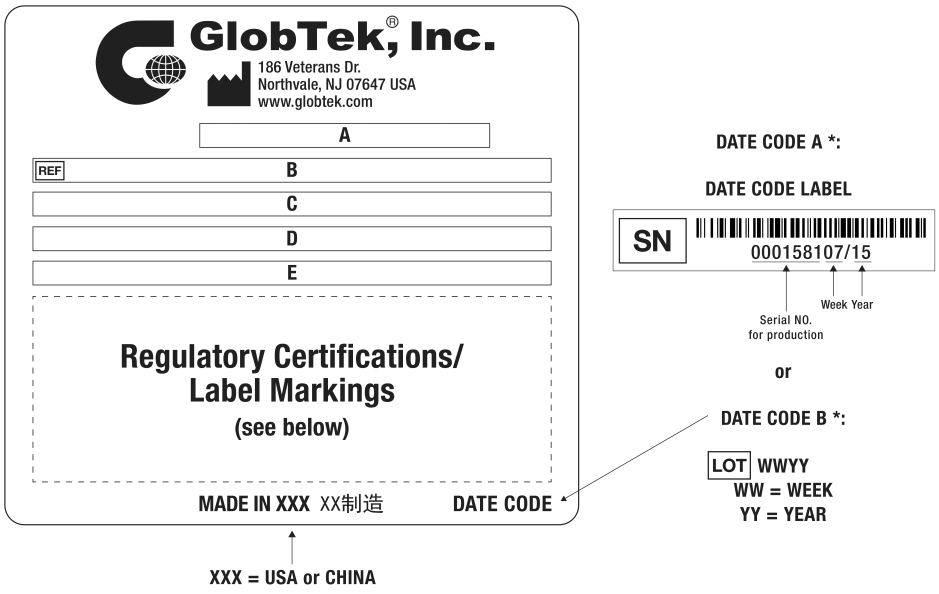


A=Medical/ICT/ITE/Household use Power Supply
B=P/N: (料号) RR9LE2500LCPCIM(R6B)
C=Model (型号) GTM96300-3014.5-2.5-R3A
D=Input (输入)100-240V~, 50-60 Hz, 1.0A
E=Output (输出)12.0 V ⎓ 2.5 A, 30.0W

PROPRIETARY INFORMATION
PROPRIETARY OF GLOBTEK, INC. ANY REPRODUCTION, DISCLOSURE OR USE OF THIS DRAWING, IN WHOLE OR IN PART, IS HEREBY PROHIBITED EXCEPT AS SPECIFIED IN WRITING BY GLOBTEK, INC. © GlobTek, Inc. 2016 - 2022
guest /09/13/2022 7:22:52 AM CLONED FROM RR9KA6000C9PCIM(RVB

GlobTek, Inc.
www.globtek.com
186 Veterans Drive,
Northvale, NJ 07647
Tel. (201) 784-1000
Fax (201) 784-0111

Drawing Title: GTM96300-3014.5-2.5-R3A, Medical/ICT/ITE/Household use Power Supply, Efficiency Level: USA DOE Level VI / Eco-design Directive 2009/125/EC, (EU) 2019/1782, Case Color/Style: GlobTek Black, Wall Plug-in+Desktop Combination, Regulated Switchmode AC-DC Power Supply AC Adaptor, Input Rating: 100-240V~, 50-60 Hz, IEC 60320/C6 w/ Wall Blades Option , Output Rating: 30W, 12.0V@2.5A, Output Configuration: 1830 mm, 18/1C + Shield Cond, UL 1185, Female Barrel 5.5 * 2.5 * 11mm with internal Spring Clip and Locking Notch or Equal, Ferrite: Core Size: 14.2*28.5*8.2, GlobTek Black, GT Cord # C0446, Pin Out: Center Positive (+V), symbol compliant with IEC 60417 symbol no. 5926, Blades/Input Cord: (Order Separately), Approvals: CCC (up to 48V only); CB 62368; CB 60950; ETL 1310; ETL; ETL; 230V CoC Tier 2; EAC; ETL 62368; UKCA; LPS 62368; UL 1310; Conforms to 62368-1; RCM; cETLus 60950-1; UL 1310; cETLus 60950-1; cETLus 60601; Morocco; RCM; S-Mark 62368; IRAM; NOM (5V only); Korea (5, 5.4, 5.95, 7.5V Only); CAN ICES-3; FCC; cETLus 60601-1 3rd; CB 60335; IP40; LPS 60950; Class I; Fuse 60335; Book 60601; cETLus 60950; Fuse 60335; S-Mark IEC/EN 60601-1; PSE; PSE; PSE; CE; China RoHS; Level VI; RoHS; Ukraine; VCCI; WEEE; CB 60601-1;cETLus; S-Mark 60950;

Model No. GTM96300-3014.5-2.5-R3A

Part No./Ordering No. RR9LE2500LCPCIM(R6B) Rev C1

| | |
|---|---|
| AGENCY ONLINE DOCUMENTS | http://www.globtek.info/certs/GTM96300-TZ/ |
| CE EC-Declaration for Medical | http://globtek.force.com/models/ec_declaration_product?id=01ta0000005xktb&m=1 |
| CE EC-Declaration for Industrial/Commercial/ITE | http://globtek.force.com/models/ec_declaration_product?id=01ta0000005xktb&i=2 |
| CE EC-Declaration for Household | http://globtek.force.com/models/ec_declaration_product?id=01ta0000005xktb&h=2 |
| UKCA-Declaration for Medical | http://globtek.force.com/models/ukca_declaration_product?id=01ta0000005xktb&m=1 |
| UKCA-Declaration for Industrial/Commercial/ITE | http://globtek.force.com/models/ukca_declaration_product?id=01ta0000005xktb&i=2 |
| UKCA-Declaration for Household | http://globtek.force.com/models/ukca_declaration_product?id=01ta0000005xktb&h=2 |
| Morocco SDoC Declaration | https://globtek.secure.force.com/models/Morocco_SDoC_Declaration?id=a0Oa000000Mm3T6EAJ |
| RoHS/RoHS3 Declaration | https://www.globtek.com/pdf/rohs_cert/01ta0000005xktbAAA |
| REACH Declaration | https://www.globtek.com/pdf/iso_certificates/REACH.pdf |
| Conflict Minerals Declaration | https://www.globtek.com/pdf/conflict-minerals.pdf |
| Prop 65 Statement | https://en.globtek.com/prop-65-statement.pdf |

IPXY rating is based on 3rd party testing and customers should check suitability and test system level IPXY rating before ordering.

## Regulatory Certifications/Label Markings

Below follows a link to the latest regulatory certifications and marks for this specific product. National standards as well as certification schemes are constantly changing and so is the set of certification marks and symbols applicable to this product. Various standards, marks and symbols, and certificates are subject to change at any time without notice.

Additional standards or unique country certifications are available upon request. Please contact Globtek to request a quotation.

| | |
|---|---|
| LATEST PRODUCT/MODEL CERTIFICATIONS: | https://www.globtek.com/datasheet/w71082 |
| AGENCY ONLINE DOCUMENTS: | http://www.globtek.info/certs/GTM96300-TZ/ |



(E1) Earthed output

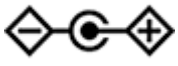

Center Positive (+V), symbol compliant with IEC 60417 symbol no. 5926

PROPRIETARY INFORMATION
PROPRIETARY OF GLOBTEK, INC. ANY REPRODUCTION, DISCLOSURE OR USE OF THIS DRAWING, IN WHOLE OR IN PART, IS HEREBY PROHIBITED EXCEPT AS SPECIFIED IN WRITING BY GLOBTEK, INC. © GlobTek, Inc. 2016 - 2022
guest /09/13/2022 7:22:52 AM CLONED FROM RR9KA6000C9PCIM(RVB

GlobTek, Inc.
www.globtek.com
186 Veterans Drive,
Northvale, NJ 07647
Tel. (201) 784-1000
Fax (201) 784-0111

Drawing Title: GTM96300-3014.5-2.5-R3A, Medical/ICT/ITE/Household use Power Supply, Efficiency Level: USA DOE Level VI / Eco-design Directive 2009/125/EC, (EU) 2019/1782, Case Color/Style: GlobTek Black, Wall Plug-in+Desktop Combination, Regulated Switchmode AC-DC Power Supply AC Adaptor, Input Rating: 100-240V~, 50-60 Hz, IEC 60320/C6 w/ Wall Blades Option , Output Rating: 30W, 12.0V@2.5A, Output Configuration: 1830 mm, 18/1C + Shield Cond, UL 1185, Female Barrel 5.5 * 2.5 * 11mm with internal Spring Clip and Locking Notch or Equal, Ferrite: Core Size: 14.2*28.5*8.2, GlobTek Black, GT Cord # C0446, Pin Out: Center Positive (+V), symbol compliant with IEC 60417 symbol no. 5926, Blades/Input Cord: (Order Separately), Approvals: CCC (up to 48V only); CB 62368; CB 60950; ETL 1310; ETL; ETL; 230V CoC Tier 2; EAC; ETL 62368; UKCA; LPS 62368; UL 1310; Conforms to 62368-1; RCM; cETLus 60950-1; UL 1310; cETLus 60950-1; cETLus 60601; Morocco; RCM; S-Mark 62368; IRAM; NOM (5V only); Korea (5, 5.4, 5.95, 7.5V Only); CAN ICES-3; FCC; cETLus 60601-1 3rd; CB 60335; IP40; LPS 60950; Class I; Fuse 60335; Book 60601; cETLus 60950; Fuse 60335; S-Mark IEC/EN 60601-1; PSE; PSE; PSE; CE; China RoHS; Level VI; RoHS; Ukraine; VCCI; WEEE; CB 60601-1;cETLus; S-Mark 60950;

Model No. GTM96300-3014.5-2.5-R3A

Part No./Ordering No. RR9LE2500LCPCIM(R6B) Rev C1

## PACKAGING

| | |
|---|---|
| Packing Spec P/N: | Standard DT, Individually Box |
| Box Qty: | 60 |
| Gift Box Size (mm): | 142*62*60 |
| Gift Box Color: | White |
| Master Carton Size (mm): | 442 x 330 x 275 |
| Master Carton Cubic Volume ($m^3$): | 0.04 |
| Master GW (Kg): | 15.2 kg |
| BLADES INCLUDED: | None: (Order Separately) |
| BLADE/CORD INSTALLED: | None: (Order Separately) |
| USER MANUAL*: | |
| USER MANUAL WEB LINK: | |

* This specification sheet is considered the user manual for all applications. It is expected that the buyer of this product will use it to formulate their own user manual for their end product and a user manual specifically for the power adapter is not usually required. If a user manual is not specifically listed above then none will be provided with this unit.

If specific packaging is required, this section must specify all requirements and note “no exceptions”. If this section does not specify packaging, it is subject to change without notice at GlobTek’s discretion

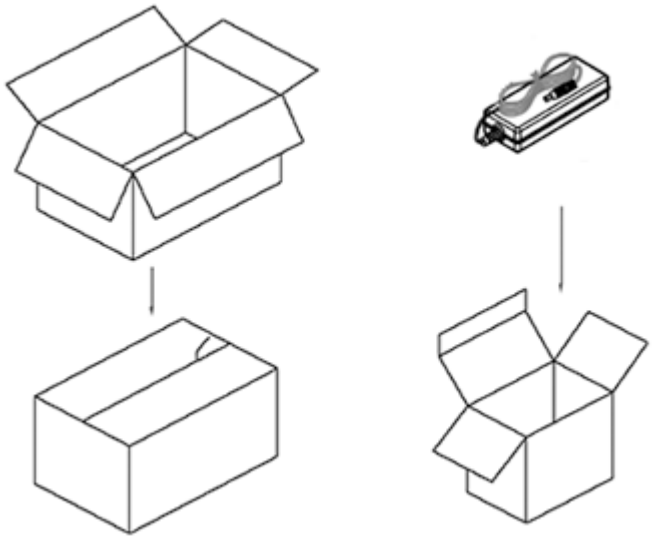

PROPRIETARY INFORMATION
PROPRIETARY OF GLOBTEK, INC. ANY REPRODUCTION, DISCLOSURE OR USE OF THIS DRAWING, IN WHOLE OR IN PART, IS HEREBY PROHIBITED EXCEPT AS SPECIFIED IN WRITING BY GLOBTEK, INC. © GlobTek, Inc. 2016 - 2022
guest /09/13/2022 7:22:52 AM CLONED FROM RR9KA6000C9PCIM(RVB

GlobTek, Inc.
www.globtek.com
186 Veterans Drive,
Northvale, NJ 07647
Tel. (201) 784-1000
Fax (201) 784-0111

| | |
|---|---|
| Drawing Title: GTM96300-3014.5-2.5-R3A, Medical/ICT/ITE/Household use Power Supply, Efficiency Level: USA DOE Level VI / Eco-design Directive 2009/125/EC, (EU) 2019/1782, Case Color/Style: GlobTek Black, Wall Plug-in+Desktop Combination, Regulated Switchmode AC-DC Power Supply AC Adaptor, Input Rating: 100-240V~, 50-60 Hz, IEC 60320/C6 w/ Wall Blades Option , Output Rating: 30W, 12.0V@2.5A, Output Configuration: 1830 mm, 18/1C + Shield Cond, UL 1185, Female Barrel 5.5 * 2.5 * 11mm with internal Spring Clip and Locking Notch or Equal, Ferrite: Core Size: 14.2*28.5*8.2, GlobTek Black, GT Cord # C0446, Pin Out: Center Positive (+V), symbol compliant with IEC 60417 symbol no. 5926, Blades/Input Cord: (Order Separately), Approvals: CCC (up to 48V only); CB 62368; CB 60950; ETL 1310; ETL; ETL; 230V CoC Tier 2; EAC; ETL 62368; UKCA; LPS 62368; UL 1310; Conforms to 62368-1; RCM; cETLus 60950-1; UL 1310; cETLus 60950-1; cETLus 60601; Morocco; RCM; S-Mark 62368; IRAM; NOM (5V only); Korea (5, 5.4, 5.95, 7.5V Only); CAN ICES-3; FCC; cETLus 60601-1 3rd; CB 60335; IP40; LPS 60950; Class I; Fuse 60335; Book 60601; cETLus 60950; Fuse 60335; S-Mark IEC/EN 60601-1; PSE; PSE; PSE; CE; China RoHS; Level VI; RoHS; Ukraine; VCCI; WEEE; CB 60601-1;cETLus; S-Mark 60950; | |
| Model No. GTM96300-3014.5-2.5-R3A | |
| Part No./Ordering No. RR9LE2500LCPCIM(R6B) | Rev C1 |

## INSTRUCTIONS TO THE OEM SYSTEMS ENGINEER

It is the responsibility of the OEM systems engineer to provide the end system user instructions and warnings for the use of this product in the end system.

If an input cord is required for this product, AC Mains voltage should be provided to the power supply by a power supply cord approved to the national standards of the country in which it will be used.

This product is not designed to be repaired. No serviceable parts inside. A blown internal fuse is an indication of catastrophic failure of circuit component(s). If a Failure Analysis is required for a failed power supply/battery charger, please return the damaged unit to GlobTek for an accurate determination of the root cause of the failure.

EMC Compliance of the complete OEM product, including the GlobTek power supply/battery charger needs to be verified by the OEM systems engineer.

## INSTRUCTION SHEET

N/A

PROPRIETARY INFORMATION
PROPRIETARY OF GLOBTEK, INC. ANY REPRODUCTION, DISCLOSURE OR USE OF THIS DRAWING, IN WHOLE OR IN PART, IS HEREBY PROHIBITED EXCEPT AS SPECIFIED IN WRITING BY GLOBTEK, INC. © GlobTek, Inc. 2016 - 2022
guest /09/13/2022 7:22:52 AM CLONED FROM RR9KA6000C9PCIM(RVB