PART NO	ENGINEERING NO.	FINISHED LENGTH
1300130291	1R4000A20M010	1M [3 FT 3 IN]
1300130293	1R4000A20M015	1.5M [4 FT 11 IN]
1300130294	1R4000A20M020	2M [6 FT 7 IN]
1300130295	1R4000A20M030	3M [9 FT 10 IN]
1300130296	1R4000A20M050	5M [16 FT 5 IN]
1300130287	1R4000A20F020	2 FT [0.6M]

PART NO. MATRIX

1R4000A20M010

FINISHED LENGTH:
A120= 12 IN.
F020= 2 FEET
M005= 0.5 METER
M010= 1 METER
M100= 10 METER

FACE VIEW-FEMALE INSERT

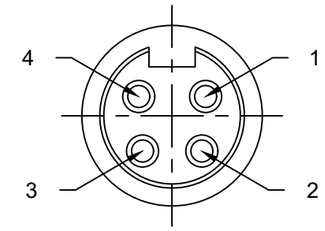

1 BLACK
2 WHITE
3 RED
4 GREEN/YELLOW

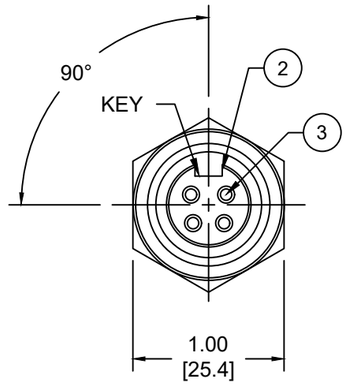

FEMALE - FACE VIEW

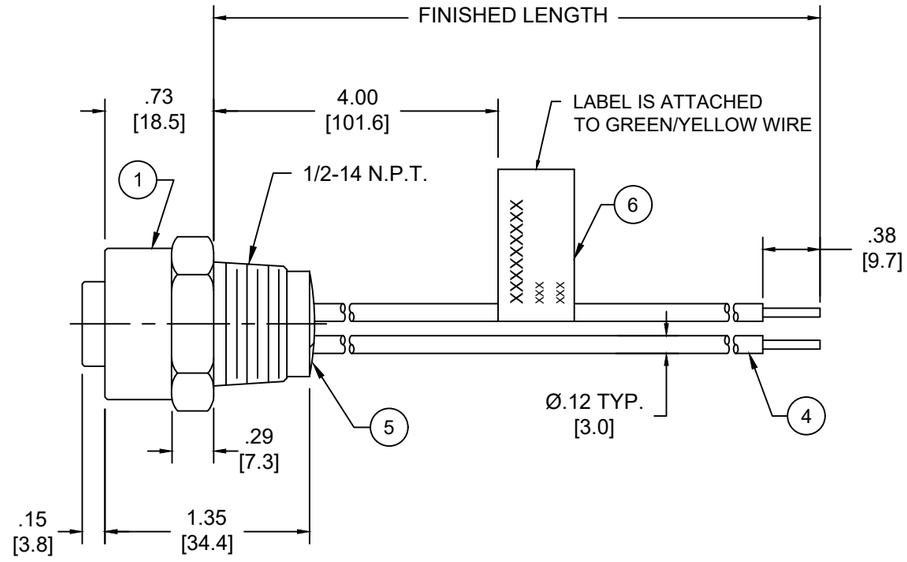

NOTES:
1. MATERIAL: AS NOTED
2. FINISH: AS NOTED
3. ELECTRICAL:
   VOLTAGE: 483V PER IEC60664
   600V PER UL2238
   CURRENT: 10A
4. TEMP RATING: -20°TO +105°C
5. PROTECTION: IP67 (WHEN MATED)
6. COUPLING THREAD: 7/8-16UN
7. CSA CERTIFIED FILE: LR6837
8. ALL DIMENSIONS ARE FOR REFERENCE
   UNLESS TOLERANCED OR NOTED OTHERWISE

CABLE LENGTH TOLERANCES
<.3M [1FT]: +19mm-0 [+.75in-0]
.3 - .9M [1 - 3FT]: +44.5mm-0 [+1.75in-0]
.9 - 1.8M [3 - 6FT]: +55.6mm-0 [+2.19in-0]
1.8 - 3.7M [6 - 12FT: +88.9mm-0 [+3.50in-0]
3.7 - 7.3M [12 - 24FT]: +165.1mm-0 [+6.50in-0]
7.3-14.6M [24 - 48FT]: +317.5mm-0 [+12.50in-0]
14.6 - 30.5M [48-100FT]: +622.3mm-0 [+24.50in-0]
OVER 30M [100FT] +2% OF FINISHED LENGTH

ITEM	DESCRIPTION	MATERIAL	FINISH
6	FLAG LABEL	VINYL	BLACK/YELLOW
5	POTTING MATERIAL	EPOXY	
4	WIRE, 16 AWG (UL1015)	PVC INSULATION	SEE FACE VIEW
3	CONTACT SOCKET	COPPER ALLOY	GOLD PLATED
2	FEMALE INSERT	TPE	YELLOW
1	RECEPTACLE SHELL	ZINC DIE-CAST	NICKEL PLATED

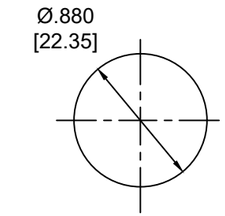

REF. KNOCKOUT HOLE

THIS DRAWING CONTAINS INFORMATION THAT IS PROPRIETARY TO MOLEX ELECTRONIC TECHNOLOGIES, LLC AND SHOULD NOT BE USED WITHOUT WRITTEN PERMISSION

FUNCTIONAL SYMBOLS
FA=0
FC=0
FP=0
DIVISIONAL SYMBOLS

DIMENSION UNITS: INCH/MM
SCALE: NTS
GENERAL TOLERANCES (UNLESS SPECIFIED)

	mm	INCH
4 PLACES	±----	±----
3 PLACES	±----	±----
2 PLACES	±----	±----
1 PLACE	±----	±----
0 PLACES	±----	±----
ANGULAR TOL	± ---- °	

DRAFT WHERE APPLICABLE MUST REMAIN WITHIN DIMENSIONS

CURRENT REV DESC: INITIAL RELEASE

EC NO: 673395
DRWN: RSTONE 2021/08/11
CHK'D: CCHRASTKA 2021/08/11
APPR: BWOODMAN 2021/08/18

INITIAL REVISION:
DRWN: RSTONE 2021/08/11
APPR: BWOODMAN 2021/08/18

THIRD ANGLE PROJECTION
DRAWING: B-SIZE
SERIES: 130013

molex

MINI-CHANGE RECEPTACLE A-SIZE
4 POLE, FEMALE, STRAIGHT, SINGLE KEY,
16 AWG

PRODUCT CUSTOMER DRAWING

DOCUMENT NUMBER	DOC TYPE	DOC PART	REVISION
1300130291	PSD	000	A

MATERIAL NUMBER	CUSTOMER	SHEET NUMBER
	GENERAL MARKET	1 OF 1

DOCUMENT STATUS	P1	RELEASE DATE	2021/08/18 23:36:24

FORMAT: IN-ACAD-tb-prod-B
REVISION: B
DATE: 2020/01/14