MOLEX P/N	ENGINEERING NO.	COUPLING NUT MATERIAL & FINISH
1300390341	DND3020	DIE CAST ZINC, BLACK E-COAT
1300390342	DND3020SS	ST. STEEL, PASSIVATED

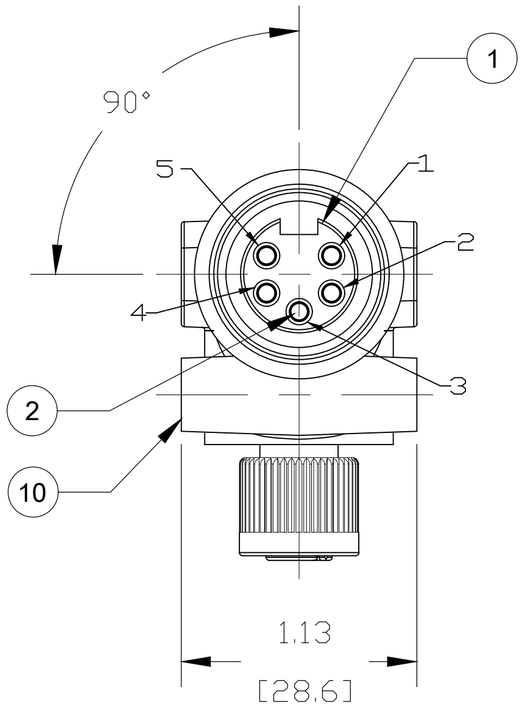

FEMALE FACE VIEW

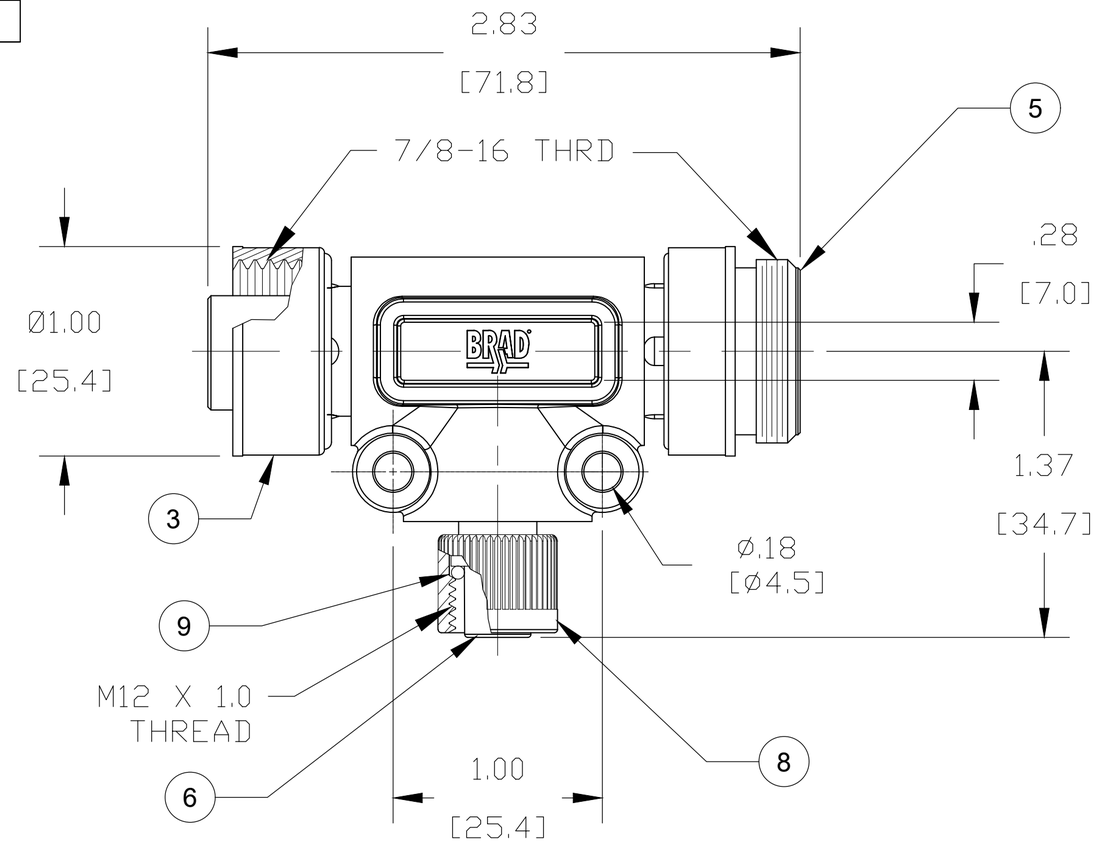

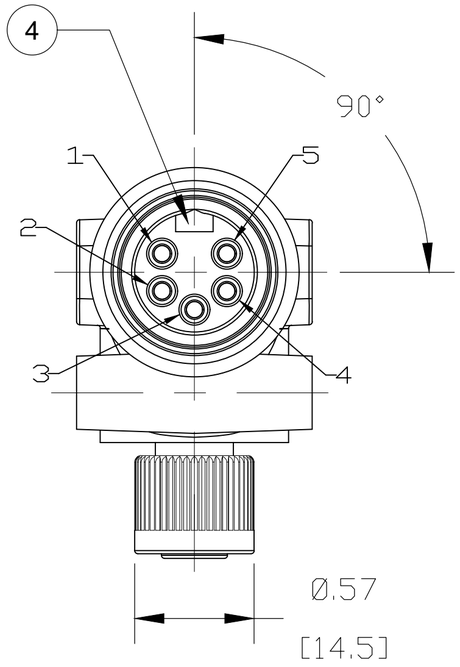

MALE FACE VIEW

NOTES:
1. MATERIAL: AS NOTED
2. FINISH: AS NOTED
3. ELECTRICAL:
   VOLTAGE: 250VDC
   CURRENT: ((TRUNK) 10A
   CURRENT (DROP): 4A
4. TEMP RATING: -25°C TO +105°C
5. PROTECTION: IP67 (WHEN MATED)
6. COUPLING THREADS: AS NOTED
7. UL RECOGNIZED FILE: E152210
   CSA CERTIFIED FILE: LR6837
8. ALL DIMS ARE FOR REFERENCE UNLESS TOLERANCED OR NOTED OTHERWISE

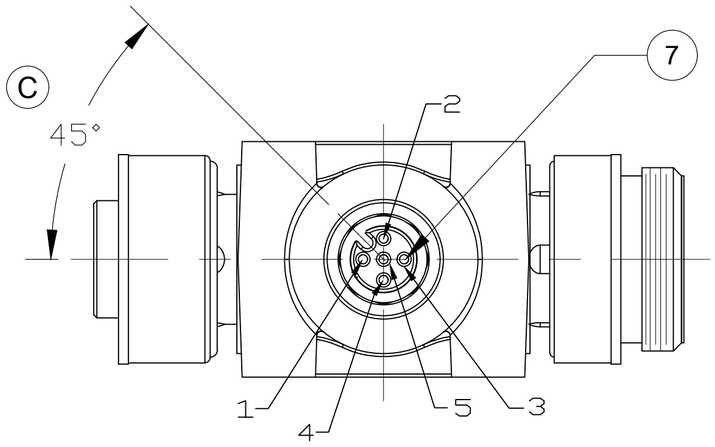

FEMALE FACE VIEW (MIC DROP)

ELECTRICAL DIAGRAM

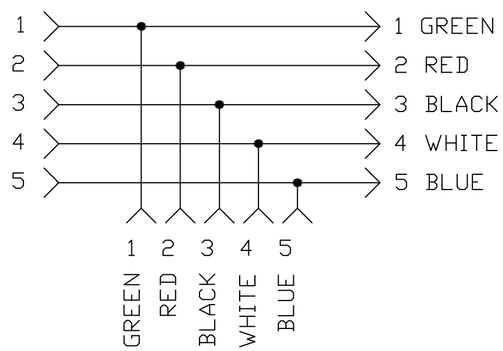

ITEM	DESCRIPTION	MATERIAL	FINISH
10	OVERMOLD	TPC	GRAY
9	O-RING	NITRILE	RED
8	MIC FEMALE COUPLING	SEE P/N CHART	SEE P/N CHART
7	CONTACT SOCKET	COPPER ALLOY	GOLD PLATED
6	MIC FEM INSERT 5P	NYLON	BLACK
5	MC COUPLING, MALE	SEE P/N CHART	SEE P/N CHART
4	MC MALE INSERT 5P	TPC	GRAY
3	MC COUPLING, FEMALE	SEE P/N CHART	SEE P/N CHART
2	CONTACT SKT/PIN	COPPER ALLOY	GOLD PLATED
1	MC FEMALE INSERT 5P	TPC	GRAY

DOCUMENT STATUS	P1	RELEASE DATE	2020/12/07 21:21:58

THIS DRAWING CONTAINS INFORMATION THAT IS PROPRIETARY TO MOLEX ELECTRONIC TECHNOLOGIES, LLC AND SHOULD NOT BE USED WITHOUT WRITTEN PERMISSION

FUNCTIONAL SYMBOLS
FA=0
FC=0
FP=0
DIVISIONAL SYMBOLS

DIMENSION UNITS: INCH/MM
SCALE: 1:1

GENERAL TOLERANCES (UNLESS SPECIFIED)

	mm	INCH
4 PLACES	±----	±----
3 PLACES	±----	±----
2 PLACES	±----	±----
1 PLACE	±----	±----
0 PLACES	±----	±----
ANGULAR TOL ±	---- °	

DRAFT WHERE APPLICABLE MUST REMAIN WITHIN DIMENSIONS

CURRENT REV DESC: CHANGED MIC KEY ORIENTATION

EC NO: 650547
DRWN: RSTONE 2020/12/02
CHK'D: ALEON01 2020/12/07
APPR: BWOODMAN 2020/12/07

INITIAL REVISION:
DRWN: RSTONE 2020/05/08
APPR: BWOODMAN 2020/05/14

THIRD ANGLE PROJECTION | DRAWING: C-SIZE | SERIES: 130039

molex

MINI-CHANGE 5P TEE WITH MIC DROP
DEVICE-NET

PRODUCT CUSTOMER DRAWING

DOCUMENT NUMBER	DOC TYPE	DOC PART	REVISION
1300390341	PSD	000	C

MATERIAL NUMBER	CUSTOMER	SHEET NUMBER
SEE P/N CHART	----	1 OF 1

FORMAT: ACAD-tb-prod-C
REVISION: B
DATE: 2020/01/14