SIC1181KQ / SIC1182KQ
SCALE-iDriver Family

Up to 8 A Single Channel SiC MOSFET and IGBT Gate Driver for Automotive Applications Providing Advanced Active Clamping and Reinforced Isolation up to 1200 V

Product Highlights

Highly Integrated, Compact Footprint

- ±8 A peak gate output current
- Integrated FluxLink™ technology providing reinforced isolation
- SiC MOSFET optimized Advanced Active Clamping
- Ultrafast short-circuit detection
- UVLO primary and secondary side
- Rail-to-rail stabilized output voltage
- Unipolar supply voltage for secondary-side
- Up to 150 kHz switching frequency
- Propagation delay jitter ±5 ns
- -40 °C to +125 °C operating ambient temperature
- High common-mode transient immunity
- eSOP package with 9.5 mm creepage and clearance, CTI 600

Protection / Safety Features

- Undervoltage lock-out protection for primary and secondary-side including fault feedback
- Over-current detection for SiC MOSFETs with current-sense terminal
- Ultrafast short-circuit monitoring, turn-off and reporting
- Overvoltage limitation during SiC MOSFET turn-off

Full Safety and Regulatory Compliance

- 100% production partial discharge test
- 100% production HIPOT compliance testing at 8000 V peak for 1 s
- Reinforced insulation pending VDE V 0884-11 certification
- UL 1577 recognized
- AEC Q-100 qualified for automotive grade level 1

Green Package

- Halogen free and RoHS compliant

Applications

- Electric vehicle BEV traction drives
- Hybrid electric vehicle PHEV traction drives
- Electric vehicle on-board and off-board chargers

Description

The SIC1181KQ and SIC1182KQ are single channel gate drivers for SiC MOSFETs. Reinforced galvanic isolation is provided by Power Integrations' revolutionary solid insulator FluxLink technology. Up to ±8 A peak output drive current enables the product to drive devices with nominal currents of up to 600 / 800 A (typical).

Additional features such as undervoltage lock-out (UVLO) for primary-side and secondary-side and rail-to-rail output with temperature and process compensated output impedance guarantee safe operation even in harsh conditions.

Furthermore, this gate driver IC comes along with short-circuit protection (at and during turn-on phase) as well as overvoltage limitation by AAC advanced active clamping (at turn-off phase) through a single sensing pin. For SIC MOSFET with current-sense terminal, an adjustable over-current detection can be realized.

Product Portfolio

Product[1]	Peak Output Drive Current	Switch Rating
SIC1181KQ	8.0 A	750 V
SIC1182KQ	8.0 A	1200 V

Table 1. SCALE-iDriver Portfolio.
Notes:
1. Package: eSOP-R16B.

Figure 2. eSOP-R16B Package.

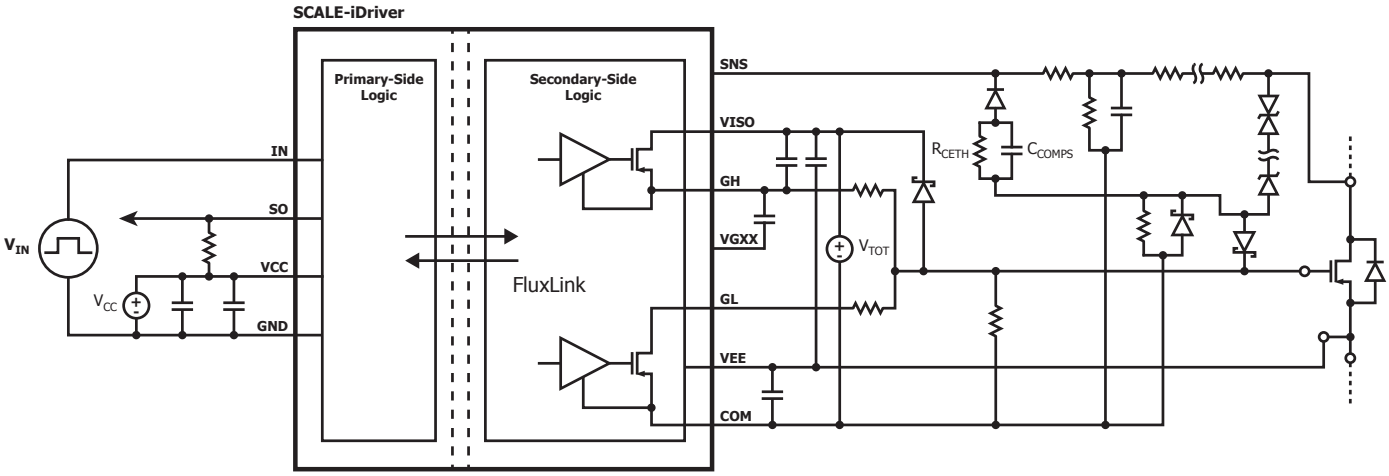

Figure 1. Typical Application Schematic.

This Product is Covered by Patents and/or Pending Patent Applications.

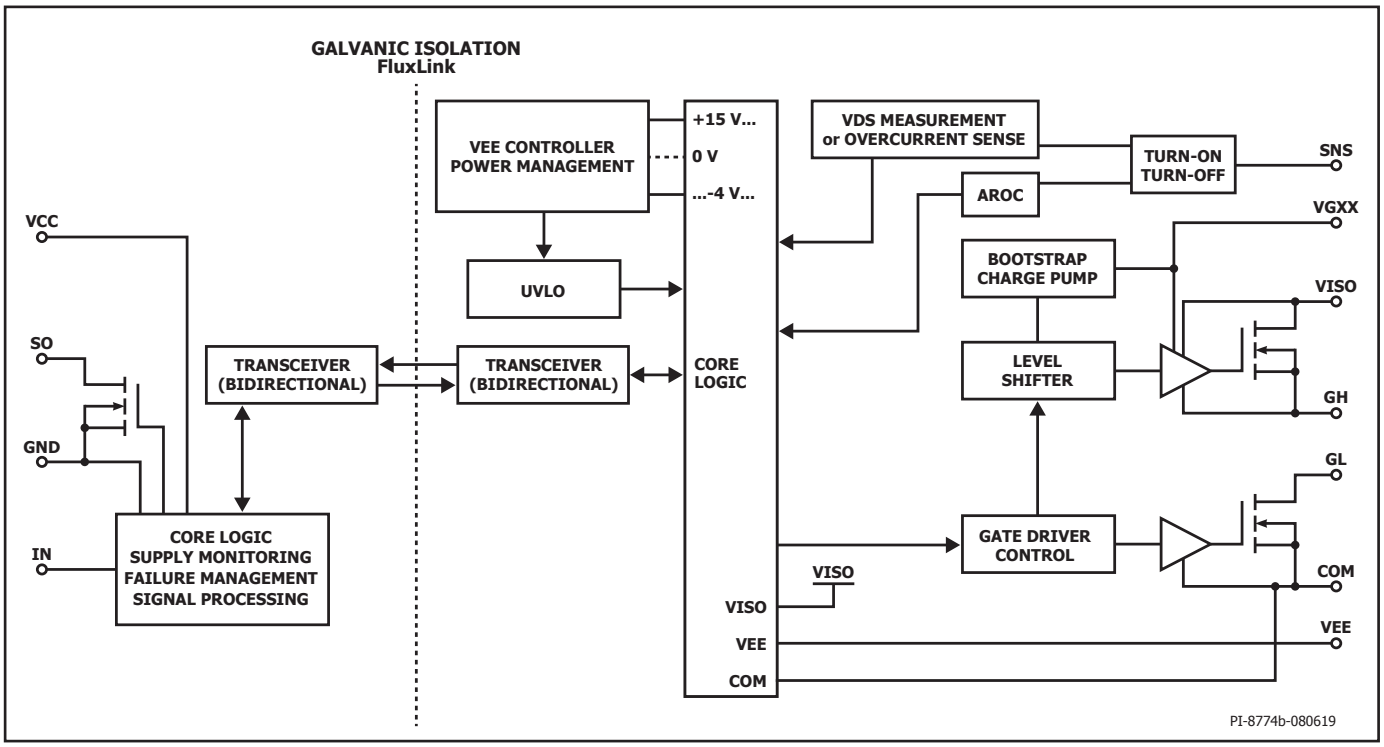

Figure 3. Functional Block Diagram.

Pin Functional Description

VCC Pin (Pin 1)
This pin is the primary-side supply voltage connection.

GND Pin (Pin 3-6)
This pin is the connection for the primary-side ground potential. All primary-side voltages refer to this pin.

IN Pin (Pin 7)
This pin is the input for the logic command signal.

SO Pin (Pin 8)
This pin is the output for the logic fault signal (open drain).

NC Pins (Pin 9)
This pin must be un-connected. Minimum PCB pad size for soldering is required.

VEE Pin (Pin 10)
Common (MOSFET source) output supply voltage.

SNS Pin (Pin 11)
This pin is the sense input detecting short-circuit events at turn-on and limiting overvoltages at turn-off.
SiC MOSFET with sense function can be used with SNS pin as over-current monitor.

VGXX Pin (Pin 12)
This pin is the bootstrap and charge pump supply voltage source.

GH Pin (Pin 13)
This pin is the driver output-sourcing current (turn-on) connection.

VISO Pin (Pin 14)
This pin is the secondary-side positive supply voltage.

COM Pin (Pin 15)
This pin provides the secondary-side reference potential.

GL Pin (Pin 16)
This pin is the driver output-sinking current (turn-off) connection.

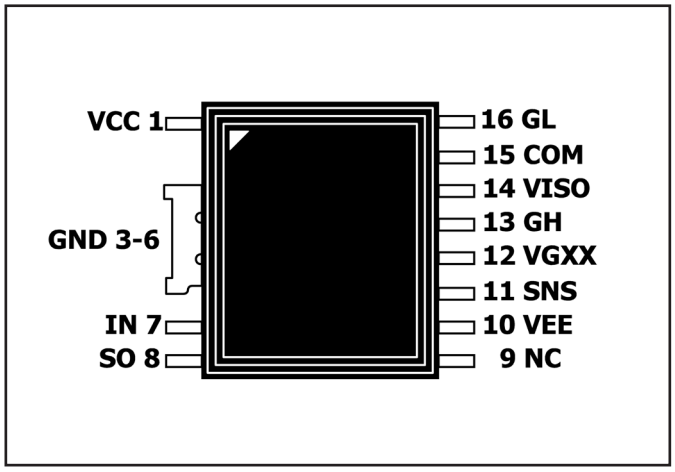

Figure 4. Pin Configuration.

SCALE-iDriver SIC118xKQ Functional Description

The single channel SCALE-iDriver™ family SIC118xKQ drives SiC MOSFET semiconductor devices with a blocking voltage of up to 1200 V and provides reinforced isolation between controller and the semiconductor device. The logic input (PWM) command signal applied via IN and the primary supply voltage supplied via VCC are both referenced to GND. The working status of the semiconductor device and SCALE-iDriver is monitored via SO.

Command signals are transferred from the primary (IN) to secondary-side via FluxLink isolation technology. GH supplies a positive gate voltage and charges the semiconductor gate during the turn-on process. GL supplies a negative gate voltage and discharges the gate during turn-off process.

Short-circuit protection as well as overvoltage limitation can be implemented by connecting a network between SNS and drain terminal of the semiconductor device. In case of a turn-on event SNS senses short-circuits, which will lead to a driver initiated turn-off to protect the semiconductor device from short-circuit damage. In case of a turn-off event SNS senses turn-off overvoltages and limits them by AAC advanced active clamping) to a save value below the semiconductor devices blocking voltage. In case the semiconductor device offers a current-sense terminal, an adjustable over-current detection can be realized as alternative to a short-circuit monitoring.

Power Supplies

The SIC118xKQ is equipped with an integrated power and voltage failure management. These features control IC power and voltage. It also generates and regulates secondary-side bipolar supply voltage. Two supply voltages are required. One for the primary-side (V_{VCC}), which powers the primary-side logic and communication with the secondary (insulated) side. The other supply voltage (V_{TOT}) is required for the secondary-side as a unipolar voltage. V_{TOT} is applied between VISO and COM. V_{TOT} has to be insulated from the primary-side and should provide at least the same insulation capabilities as the SCALE-iDriver. V_{TOT} should have a low coupling capacitance to the primary or any other secondary-side. The positive gate-source voltage is provided by V_{VISO}, which is internally generated and stabilized to 15 V (typically) with respect to VEE. The negative gate-source voltage is provided by V_{VEE} with respect to COM. Due to the limited current sourcing/sinking capabilities of VEE, any additional load needs to be applied between VISO and COM. No additional load between VISO and VEE or between VEE and COM is allowed.

Input and Fault Logic (Primary-Side)

The input (IN) logic is designed to work directly with controllers using 5 V CMOS logic. It is recommended to use a pull-down resistor R1 close to the input pin of the SIC118xKQ.

If the physical distance between the controller and the SCALE-iDriver is large a line driver is recommended or increase the logic level to 15 V. For 15 V logic level, the resistive divider in Figure 6 is recommended. This solution adjusts the logic level as necessary and will also improve driver's noise immunity.

Gate driver commands are transferred from IN to GH (turn-on) and GL (turn-off) with a propagation delay $t_{P(LH)}$ and $t_{P(HL)}$.

During normal operation, when there is no fault detected, the SO pin stays at high impedance (open drain). Any fault is reported by connecting the SO pin to GND. SO stays low as long as V_{VCC} (primary-side) stays below $UVLO_{VCC}$. If a short-circuit is detected or the supply voltage V_{VISO}, (secondary-side) drops below $UVLO_{VISO}$, the SO status changes with a delay time t_{FAULT} and keeps status low for a time defined as t_{SO}. In case of a fault condition the driver applies the off-state (GL is connected to COM). During the t_{SO} period, command signal transitions from IN are ignored. A new turn-on command transition is required before the driver will enter the on-state.

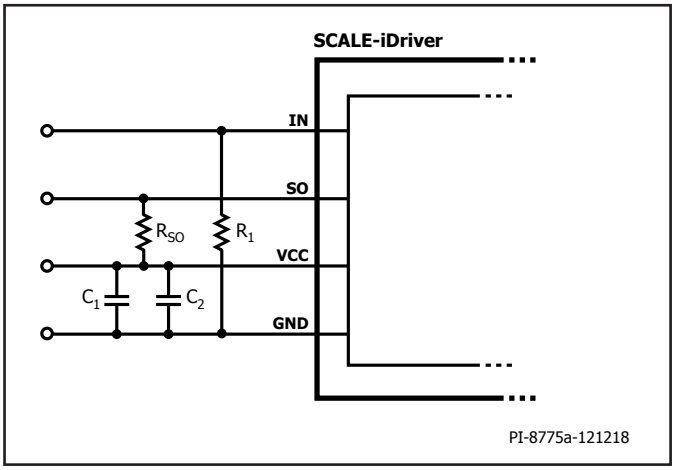

Figure 5. Recommended Circuitry for Standard 5 V IN Logic Level.

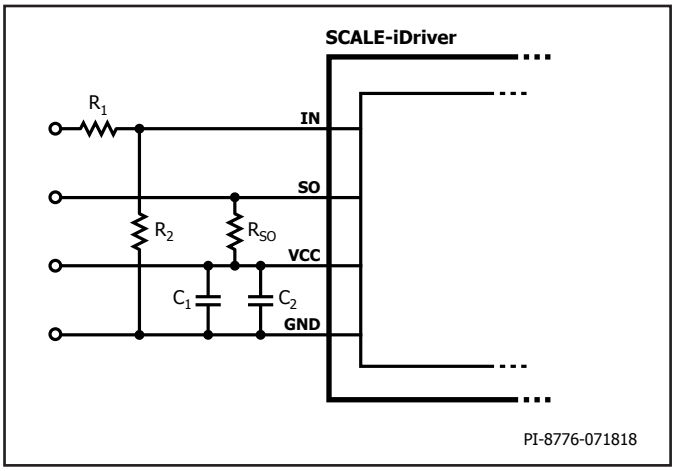

Figure 6. Recommended Circuitry for Increased IN Logic Levels. For R_1 = 3.3 kΩ and R_2 = 1.2 kΩ the IN Logic Level is 15 V.

Output (Secondary-Side)

The gate of the semiconductor device to be driven can be connected to the SCALE-iDriver output via GH and GL, using two different resistor values. Turn-on gate resistor R_{GON} needs to be connected to the GH pin and turn-off gate resistor R_{GOFF} to GL. If both gate resistors have the same value, GL and GH can be connected together.
The SCALE-iDriver data sheet defines the R_{GH} and R_{GL} values as total resistances connected to the respective GH and GL. Note that most semiconductor device data sheets specify an internal gate resistor R_{GINT} which is already integrated into the semiconductor device. In addition to R_{GINT}, external resistor devices R_{GON} and R_{GOFF} are specified to setup the gate current levels to the application requirements. Consequently, R_{GH} is the sum of R_{GON} and R_{GINT}. Careful consideration should be given to the power dissipation and peak current associated with the external gate resistors. The GH pin output current source (I_{GH}) of SIC118xKQ is capable of handling up to 7.8 A during turn-on, and the GL pin output current source (I_{GL}) is able to sink up to 7.3 A during turn-off. The SCALE-iDriver's internal resistances are described as R_{GHI} and R_{GLI} respectively. If the gate resistors for SCALE-iDriver attempt to draw a higher peak current, the peak current will be internally limited to a safe value.

Safe Power-Up and Power-Down

It is recommended during power-up and power-down that the IN pin stays at logic low. Any supply voltage related to VCC, VISO, VEE and VGXX pins should be stabilized using ceramic capacitors C_1, C_2, C_{S1}, C_{S2}, and C_{GXX} respectively as shown in Figure 5, 6, 7 and 8. After supply voltages reach their nominal values, the driver will begin to function after a time delay t_{START}.

Short-Pulse Operation

If command signals applied to IN are shorter than the minimum specified by $t_{GE(MIN)}$, then SIC118xKQ output signals at GH and GL will extend to a value of $t_{GE(MIN)}$. The duration of pulses longer than $t_{GE(MIN)}$ will not be changed.

Short-Circuit Protection

The SIC118xKQ uses the semiconductor device drain to source voltage to detect a short-circuit utilizing a sensing resistor network. With the help of a well stabilized V_{VISO} and a Schottky diode connected between semiconductor device gate and VISO the V_{GS} is clamped to the regulated VISO and the short-circuit current as well related SiC semiconductor energy will be limited.

During the off-state, SNS is internally connected to the COM pin. In case an optional filter-capacitor is applied between SNS pin and COM this capacitor is discharged.

When the driver is in turn-on transition or in on-state, the short-circuit detection algorithm through SNS is activated after an ASIC internally blanking time has elapsed. If now a voltage drop of about 0.4 V (typically) is detected at SNS referenced to VEE, this is interpreted as a detected short-circuit. The driver initiates a short-circuit turn-off without receiving a primary-side command. A fault command is sent to the primary side and SO is pulled to GND for typically 10 μs. During this time the driver ignores any command signal at the IN pin. In parallel to the short-circuit turn-off transition phase, the SCALE-iDriver's internal Advanced Active Clamping overvoltage limitation scheme is activated.

V_{DS} Overvoltage Limitation (Advanced Active Clamping)

If the driver is in turn-off transition or in off-state the overvoltage limitation algorithm is activated at SNS and the internal reference is COM. In case a current of typically 440 μA (turn-off transition) to 520 μA (off-state) is feed to SNS, the driver will regulate the gate current to limit the turn-off di/dt and therefore the overvoltage at drain to source during turn-off.

Over-Current Detection

In case the semiconductor device offers a so called current-sense terminal, this signal can be fed into SNS with reference to VEE. As described in the short-circuit protection section, a voltage of about 0.4 V at SNS with reference to VEE will now be handled as an over-current. That leads to an over-current turn-off, following the same scheme as for a short-circuit condition.

Application Example

This example describes how to set up the SIC118xKQ to use overvoltage limitation with a chain of TVS-diodes between the SiC MOSFET device Drain and SIC118xKQ SNS pin as well as a short-circuit detection via a resistive network also connected to the SNS pin.

Primary-Side

For the input the circuitry of Figure 6 is recommended, when using 15 V input logic. R_1 and R_2 represent a voltage divider to get a 5 V signal at the IN pin. If additional filtering is required a capacitor C_F can be placed in parallel to R_2 as depicted in Figure 7. The time constant τ can be calculated by Equation (1). In case direct 5 V logic is used at the IN pin, R_2 is recommended at any case and R_1 can be reduced to 100 Ω.

$$t = \frac{R_1 \times R_2}{R_1 + R_2} \times C_F \quad (1)$$

The pull up resistor R_{SO} shall be connected to VCC and SO, with a value of 1 kΩ, to provide around 5 mA to SO (open drain) in a fault condition. The primary-side power supply is connected to VCC and COM, where C_1 is buffering V_{VCC} and C_2 acts as high frequency filter.

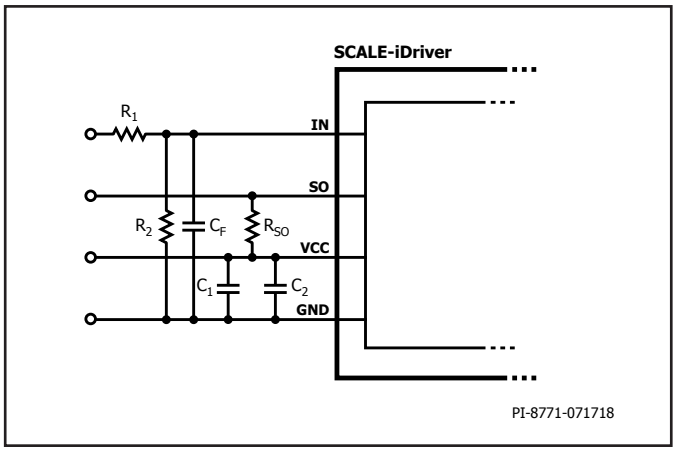

Figure 7. Primary-Side of Example Circuitry.

Secondary-Side

The secondary-side power supply is connected to VISO and COM as shown in Figure 8. It is for instance recommended for SiC MOSFET to use V_{TOT} = 20 V, to get V_{GH} = 15 V for turn-on referenced to VEE and V_{GL} = -5 V referenced to VEE for turn-off, to avoid additional components. In any case parasitic turn-on effects need to get considered.

For each μC of semiconductor's gate charge a buffer capacitor of at least 3 μF shall be placed at VEE to COM (C_{S1}) as well as between VISO and VEE (C_{S2}). A 10 nF capacitor is connected between GH and VGXX.

To ensure gate voltage stabilization and drain current limitation during short-circuit the gate is connected to V_{VISO} through Schottky diode D_{STO}.

To avoid parasitic turn-on during system power-on, the gate is connected to COM via a 22 kΩ resistor R_{DIS}.

The SNS pin has an alternating function that can be used for an overvoltage limitation, the so called Advanced Active Clamping, via a TVS-diodes chain during the turn-off transient as well as for a short-circuit detection via a resistive network during the turn-on transient.

The SiC MOSFET AAC is triggered with the current I_{SNS} flowing into the SNS pin of the SIC118xKQ which gradually reduces the GL-current down to typically 20 mA with increased I_{SNS}. This increases the effectiveness of the Active Clamping function provided by the TVS-diodes drastically. For example: the total voltage limit of the TVS chain is set to 900 V for a 1200 V-SiC MOSFET device.

During the turn-on transition the SNS pin serves the short-circuit detection and shut-down is triggered by a detection level referenced to COM of V_{SNS}. The resistor chain to the Drain of the SiC MOSFET is consisting of the resistors from R_{CE2} to R_{CE10}. For example 2.43 MΩ for a 1200 V-SiC MOSFET device.

If the SiC MOSFET has a sense terminal referenced to VEE which provides a fraction of the actual Source current this signal can also be fed back to the SNS pin via a shunt resistor. If here the SNS detection level of V_{SNS} is reached the SIC118xKQ will turn-off the SiC MOSFET and thus provide an over-current detection.

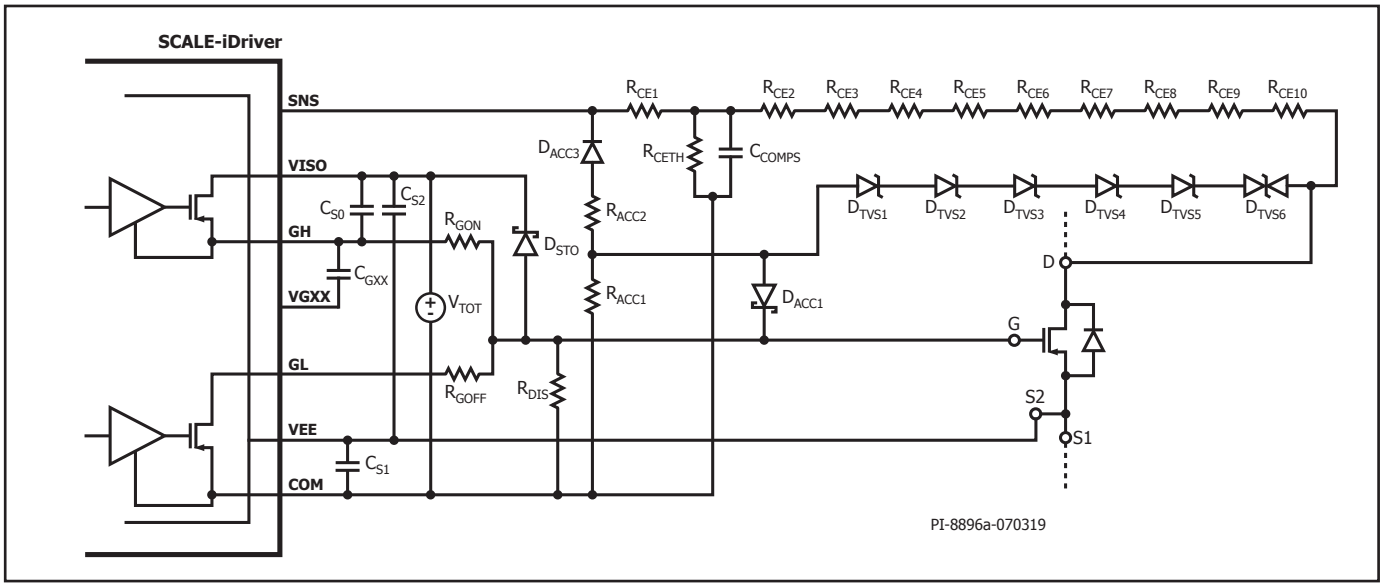

Figure 8. Secondary-Side of Example Circuitry without Booster Transistors.

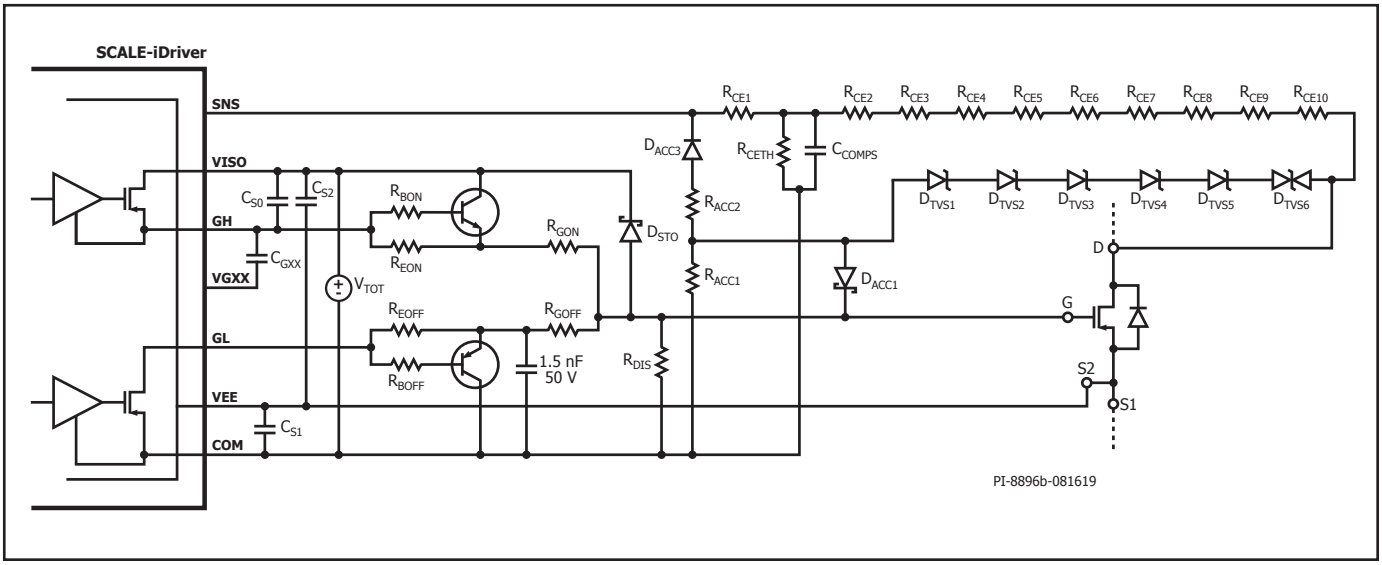

Figure 9. Secondary-Side of Example Circuitry with Booster Transistors to Increase Gate Current.

Power Dissipation and IC Junction Temperature Estimation

The first step in designing the power semiconductor switch gate driver stage is to calculate the required gate power P_{DRV}. The power is calculated based on equation (2):

$$P_{DRV} = Q_{GATE} \times f_S \times V_{TOT} \quad (2)$$

Where,

Q_{GATE} – Controlled power semiconductor switch gate charge derived for the particular gate potential range defined by V_{TOT}.

f_S – Switching frequency which is the same as applied to the IN pin of SCALE-iDriver.

V_{TOT} – SCALE-iDriver secondary-side supply voltage.

In addition to P_{DRV}, the primary-side IC power dissipation P_P and the secondary-side IC power dissipation without capacitive load P_{SNL} must be considered according to Equation (3) and (4). Both are ambient temperature and switching frequency dependent (see Typical Performance Characteristics).

$$P_P = V_{VCC} \times I_{VCC} \quad (3)$$

$$P_{SNL} = V_{TOT} \times I_{VISO} \quad (4)$$

During IC operation, the P_{DRV} is shared between the external turn-on gate resistor R_{GH}, turn-off gate resistor R_{GL}, the internal gate resistor R_{GINT} of the power switch (if available) and internal driver resistances R_{GHI} and R_{GLI}.

For junction temperature estimation purposes, the dissipated power under load P_{OL} inside the IC can be calculated according to Equation (5).

$$P_{OL} = 0.5 \times Q_{GATE} \times f_S \times V_{TOT} \times \left(\frac{R_{GHI}}{R_{GHI} + R_{GH}} + \frac{R_{GLI}}{R_{GLI} + R_{GL}} \right) \quad (5)$$

R_{GH} and R_{GL} represent the sum of the external gate resistors (R_{GON}, R_{GOFF}) as well as the internal gate resistance of the SiC MOSFET power semiconductor R_{GINT} as shown in Equation (6) and (7).

$$R_{GH} = R_{GON} + R_{GINT} \quad (6)$$

$$R_{GL} = R_{GOFF} + R_{GINT} \quad (7)$$

Total IC power dissipation P_{DIS} is estimated as per Equation (8) as sum of Equation (3), (4) and (5).

$$P_{DIS} = P_P + P_{SNL} + P_{OL} \quad (8)$$

The operating junction temperature T_J for a given ambient temperature T_A can be estimated with the thermal resistance from junction to ambient θ_{JA} according to Equation (9).

$$T_J = \theta_{JA} \times P_{DIS} + T_A \quad (9)$$

Parameter	Symbol	Conditions	Min	Max	Units
Absolute Maximum Ratings[1]					
Primary-Side Supply Voltage[2]	V_{VCC}	VCC to GND	-0.5	6.5	V
Secondary-Side Total Supply Voltage	V_{TOT}	VISO to COM	-0.5	30	V
Secondary-Side Positive Supply Voltage	V_{VISO}	VISO to VEE	-0.5	20	V
Secondary-Side Negative Supply Voltage	V_{VEE}	VEE to COM	-0.5	15	V
Logic Input Voltage (command signal)	V_{IN}	IN to GND	-0.5	V_{VCC} + 0.5	V
Logic Output Voltage (fault signal)	V_{SO}	SO to GND	-0.5	V_{VCC} + 0.5	V
Logic Output Current (fault signal)	I_{SO}	Positive Current Flowing into the Pin		10	mA
Switching Frequency	f_S			150	kHz
Storage Temperature	T_S		-65	150	°C
Operating Junction Temperature	T_J		-40	150[3]	°C
Operating Ambient Temperature	T_A		-40	125	°C
Operating Case Temperature	T_C		-40	125	°C
Input Power Dissipation[4]	P_P	V_{VCC} = 5 V, V_{TOT} = 28 V, T_A = 25 °C f_S = 150 kHz		188	mW
Output Power Dissipation[4]	P_S			1602	
Total IC Power Dissipation	P_{DIS}			1790	mW

NOTES:

1. Stresses beyond those listed under absolute maximum ratings may cause permanent damage to the device.
2. Defined as peak voltage measured directly on VCC pin.
3. Transmission of command signals could be affected at junction temperatures higher than recommended.
4. Input Power Dissipation refers to Equation (3). Output Power Dissipation is secondary-side IC power dissipation without capacitive load (P_{SNL}, Equation (4)) and dissipated power under load (P_{OL}, Equation (5)). Total IC power dissipation is sum of P_P and P_S.

Thermal Resistance

Thermal Resistance: eSOP-R16B Package:

(θ_{JA}) ..... 67 °C/W[1]
(θ_{JC}) ..... 34 °C/W[2]

Notes:

1. 2 oz. (610 g/m^2) copper clad.
2. The case temperature is measured at the plastic surface at the top of the package.

Parameter	Symbol	Conditions T_J = -40 °C to +125 °C See Note 1 (Unless Otherwise Specified)	Min	Typ	Max	Units
Recommended Operation Conditions						
Primary-Side Supply Voltage	V_{VCC}	VCC – GND	4.75		5.25	V
Secondary-Side Total Supply Voltage	V_{TOT}	VISO – COM	18		28	V
Logic Low Input Voltage	V_{IL}				0.5	V
Logic High Input Voltage	V_{IH}		3.3			V
Switching Frequency	f_S		0		150	kHz
Operating IC Junction Temperature	T_J		-40		125	°C
Electrical Characteristics						
Logic Low Input Threshold Voltage	V_{IN+LT}		0.6	1.25	1.8	V
Logic High Input Threshold Voltage	V_{IN+HT}		1.7	2.2	3.05	V
Logic Input Voltage Hysteresis	V_{IN+HS}	See Note 8	0.1			V
Input Bias Current	I_{IN}	V_{IN} = 4 V	14	23	30	µA
Supply Current (Primary-Side)	I_{VCC}	V_{IN} = 0 V		15	22	mA
		V_{IN} = 5 V		25	35	
		f_S = 20 kHz		22	30	
		f_S = 75 kHz		25	35	
Supply Current (Secondary-Side)	I_{VISO}	V_{IN} = 0 V		7	9	mA
		V_{IN} = 5 V		7.5	9	
		f_S = 20 kHz		8	10	
		f_S = 75 kHz		11	14	
Power Supply Monitoring Threshold (Primary-Side)	$UVLO_{VCC}$	Resume Operation		4.3	4.65	V
		Suspend Operation	3.85	4.15		
		Hysteresis See Note 8	0.02			
Power Supply Monitoring Threshold (Secondary-Side, Positive Rail V_{VISO})	$UVLO_{VISO}$	Resume Operation		12.85	13.5	V
		Suspend Operation	11.7	12.35		
		Hysteresis See Note 8	0.3			
Power Supply Monitoring Blanking Time (Secondary-Side, Positive Rail V_{VISO})	$UVLO_{VISO(BL)}$	VISO Voltage Drop 13.5 V to 11.5 V See Note 8	0.5			µs

Parameter	Symbol	Conditions T_J = -40 °C to +125 °C See Note 1 (Unless Otherwise Specified)	Min	Typ	Max	Units
Electrical Characteristics (cont.)						
Secondary-Side Positive Supply Voltage Regulation	$V_{VISO(HS)}$	21 V < V_{TOT} ≤ 30 V: $\|I_{VEE}\|$ ≤ 1500 µA V_{TOT} = 19 V, $\|I_{VEE}\|$ ≤ 750 µA V_{TOT} = 18 V, $\|I_{VEE}\|$ ≤ 400 µA	14.4		15.75	V
VEE Source Capability	$I_{VEE(SO)}$	V_{TOT} = 15 V, V_{VEE} set to 0 V	0.1			mA
		V_{TOT} = 25 V, V_{EE} set to 7.5 V, See Note 9	1.85	3.3	4.5	
VEE Sink Capability	$I_{VEE(SI)}$	V_{TOT} = 25 V, V_{EE} set to 12.5 V, See Note 9	1.74	3.1	4.5	mA
SNS Fault Monitoring Threshold	V_{SNS}	During turn-On transient, referenced to COM, See Note 8		400		mV
SNS Fault Monitoring Blanking Time	$t_{SNS(BL)}$	Time between SNS rises at V_{SNS} and GH falls at 16 V	450	650	900	ns
SNS Current Required to Reduce GL-Current to 20 mA	I_{SNS}	During turn-off transient, T_J = 25 °C		535		µA
Turn-On Propagation Delay	$t_{P(LH)}$	T_J = 25 °C See Note 3	250	265	305	ns
		T_J = 125 °C See Note 3	255	282	300	
Turn-Off Propagation Delay	$t_{P(HL)}$	T_J = 25 °C See Note 4	240	270	325	ns
		T_J = 125 °C See Note 4	250	288	320	
Minimum Turn-On and Turn-Off Pulses	$t_{GE(MIN)}$	See Note 8			650	ns
Output Rise Time	t_R	No C_G, See Note 5		22	45	ns
		C_G = 10 nF, See Note 5	55	113	150	
		C_G = 47 nF, See Note 5	300	475	650	
Output Fall Time	t_F	No C_G See Note 6		18	45	ns
		C_G = 10 nF	55	105	150	
		C_G = 10 nF	300	447	650	
Propagation Delay Jitter	Δ_{TP}	See Note 8		±5		ns
Fault Signalization Delay Time	t_{FAULT}	See Note 13		0.8	1.4	µs
SO Fault Signalization Time	t_{SO}		6.8	10	13.4	µs
Power-On Start-Up Time	t_{START}	See Note 7, 8			10	ms

Parameter	Symbol	Conditions T_J = -40 °C to +125 °C See Note 1 (Unless Otherwise Specified)	Min	Typ	Max	Units
Electrical Characteristics (cont.)						
Gate Sourcing Peak Current, GH Pin	$I_{G(H)}$	$V_{GH} \geq V_{TOT} - 11$ V C_G = 470 nF See Note 9	3.6	4.35	5.5	A
		R_G = 0 Ω T_A = 25 °C f_S = 1 kHz See Notes 2, 8, 9		7.8		
Gate Sinking Peak Current, GL Pin	$I_{G(L)}$	$V_{GL} \leq 7.5$ V, C_G = 470 nF V_{GL} referenced to COM	3.6	4.55	5.5	A
		R_G = 0 Ω, f_S = 1 kHz See Notes 2, 8		7.3		
Internal Turn-On Gate Resistance	R_{GHI}	I_G = 250 mA V_{IN}= 5 V See Note 9		0.74	1.2	Ω
Turn-Off Internal Gate Resistance	R_{GLI}	I_G = 250 mA V_{IN} = 0 V See Note 9		0.68	1.1	Ω
Turn-On Gate Output Voltage (Referred to COM Pin)	$V_{GH(ON)}$	I_G = 20 mA V_{IN} = 5 V See Note 9	V_{TOT} - 0.04			V
Turn-Off Gate Output Voltage (Referred to COM Pin)	$V_{GL(OFF)}$	I_G = -20 mA V_{IN} = 5 V See Note 9			0.04	V
SO Output Voltage	$V_{SO(FAULT)}$	Fault Condition, I_{SO} = 3.4 mA $V_{VCC} \geq 3.9$ V		210	450	mV
Package Characteristics (See Notes 8, 10)						
Distance Through the Insulation	DTI	Minimum Internal Gap (Internal Clearance)	0.4			mm
Minimum Air Gap (Clearance)	L1 (IO1)	Shortest Terminal-to-Terminal Distance Through Air	9.5			mm
Minimum External Tracking (Creepage)	L2 (IO2)	Shortest Terminal-to-Terminal Distance Across the Package Surface	9.5			mm
Tracking Resistance (Comparative Tracking Index)	CTI	DIN EN 60112 (VDE 0303-11): 2010-05 EN / IEC 60112:2003 + A1:2009	600			
Isolation Resistance, Input to Output	R_{IO}	V_{IO} = 500 V, T_J = 25 °C See Note 12	10^{12}			Ω
		V_{IO} = 500 V, 100 °C ≤ T_J ≤ $T_{C(MAX)}$ See Note 12	10^{11}			
Isolation Capacitance, Input to Output	C_{IO}	See Note 12		1		pF

Parameter	Symbol	Conditions T_J = -40 °C to +125 °C See Note 1 (Unless Otherwise Specified)		Min	Typ	Max	Units
Package Insulation Characteristics							
Maximum RMS Working Isolation Voltage	V_{IORM}	SIC1181KQ				531	V_{RMS}
		SIC1182KQ				849	
Maximum Repetitive Peak Isolation Voltage	V_{IORM}	SIC1181KQ				750	V_{PEAK}
		SIC1182KQ				1200	
Input to Output Test Peak Voltage	V_{PD}	Method A, After Environmental Tests Subgroup 1, V_{PD} = 1.6 × V_{IORM}, t = 10 s (qualification) Partial Discharge < 5 pC	SIC1181KQ			1200	V_{PEAK}
			SIC1182KQ			1920	
		Method A, After Input/Output Safety Test Subgroup 2/3, V_{PD} = 1.2 × V_{IORM}, t = 10 s, (qualification) Partial Discharge < 5 pC	SIC1181KQ			900	
			SIC1182KQ			1440	
		Method B1, 100% Production Test, V_{PD} = 1.875 × V_{IORM}, t = 1 s Partial Discharge < 5 pC	SIC1181KQ			1407	
			SIC1182KQ			2250	
Maximum Transient Peak Isolation Voltage	V_{IOTM}	V_{TEST} = V_{IOTM}, t = 60 s (qualification), t = 1 s (100% production)	SIC1181KQ			6000	V_{PEAK}
			SIC1182KQ			8000	
Insulation Resistance	R_S	V_{IO} = 500 V at T_S				>10^9	Ω
Maximum Case Temperature	T_S					150	°C
Safety Total Dissipated Power	P_S	T_A = 25 °C Derating See Figure 10				1.79	W
Pollution Degree					2		
Climatic Classification					40/125/21		
RMS Withstanding Isolation Voltage	V_{ISO}	V_{TEST} = V_{ISO}, t = 60 s (qualification), V_{TEST} = 1.2 × V_{ISO} = 6000 V_{RMS}, t = 1 s (100% production)			5000		V_{RMS}

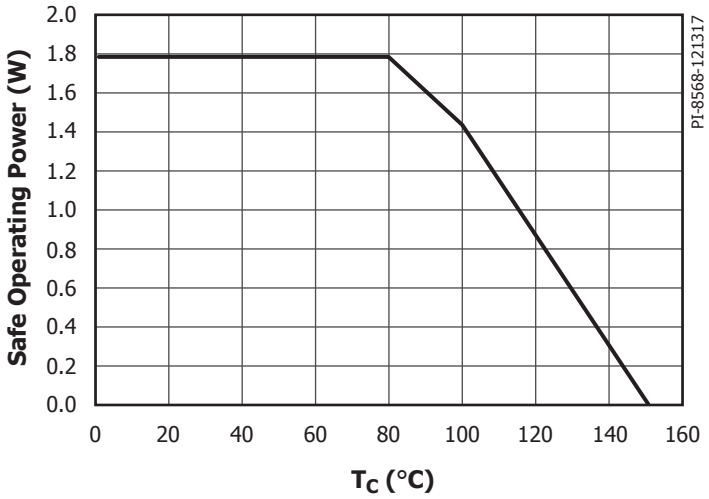

Figure 10. Thermal Derating Curve Showing Dependence of Limited Dissipated Power P_S on Case Temperature T_C (DIN V VDE 0884-11).

Operation is allowed until reaching T_A and/or case temperature of 125 °C. Thermal stress beyond those values but below thermal derating curve may lead to permanent functional product damage. Operating beyond thermal SOP derating curve may affect product reliability.

NOTES:

1. V_{VCC} = 5 V, V_{TOT} = 25 V. R_G = 5.6 Ω, no C_G. The VGXX pin is connected to the G pin through a 10 nF capacitor.
   Typical values are defined at T_J = 25 °C, f_S = 150 kHz, duty cycle = 50%. Positive currents are assumed to be flowing into pins.
2. Pulse width ≤ 10 μs, duty cycle ≤ 1%. The maximum value is controlled by the ASIC to a safe level. The internal peak power is safely controlled for R_G ≥ 0 Ω and power semiconductor module input gate capacitance C_{IES} ≤ 47 nF. The gate sourcing peak current was determined by the time required to charge a gate capacitance of 388 nF with R_{GH} = 0 (and R_{GL} = 4 Ω) from a voltage level of 2.5 V to a voltage level of 12.5 V. The gate sinking peak current was determined by the time required to discharge a gate capacitance of 388 nF with R_{GL} = 0 (and R_{GH} = 4 Ω) from a voltage level of 22.5 V to a voltage level of 12.5 V.
3. V_{IN} potential changes from 0 V to 5 V within 10 ns. Delay is measured from 50% voltage increase on IN pin to 10% voltage increase on G pin.
4. V_{IN} potential changes from 5 V to 0 V within 10 ns. Delay is measured from 50% voltage decrease on IN pin to 10% voltage decrease on G pin.
5. Measured from 10% to 90% of V_{GE} (C_G simulates semiconductor gate capacitance). The V_{GE} is measured across C_G.
6. Measured from 90% to 10% of V_{GE} (C_G simulates semiconductor gate capacitance). The V_{GE} is measured across C_G.
7. The amount of time after primary and secondary-side supply voltages (V_{VCC} and V_{TOT}) reach minimal required level for driver proper operation. No signal is transferred from primary to secondary-side during that time.
8. Guaranteed by design.
9. Positive current is flowing out of the pin.
10. Safety distances are application dependent and the creepage and clearance requirements should follow specific equipment isolation standards of an application. Board design should ensure that the soldering pads of an IC maintain required safety relevant distances.
11. Measured accordingly to IEC 61000-4-8 (f_S = 50 Hz, and 60 Hz) and IEC 61000-4-9.
12. All pins on each side of the barrier tied together creating a two-terminal device.
13. The amount of time needed to transfer fault event (UVLO or SNS fault) from secondary-side to SO pin.

eSOP-R16B

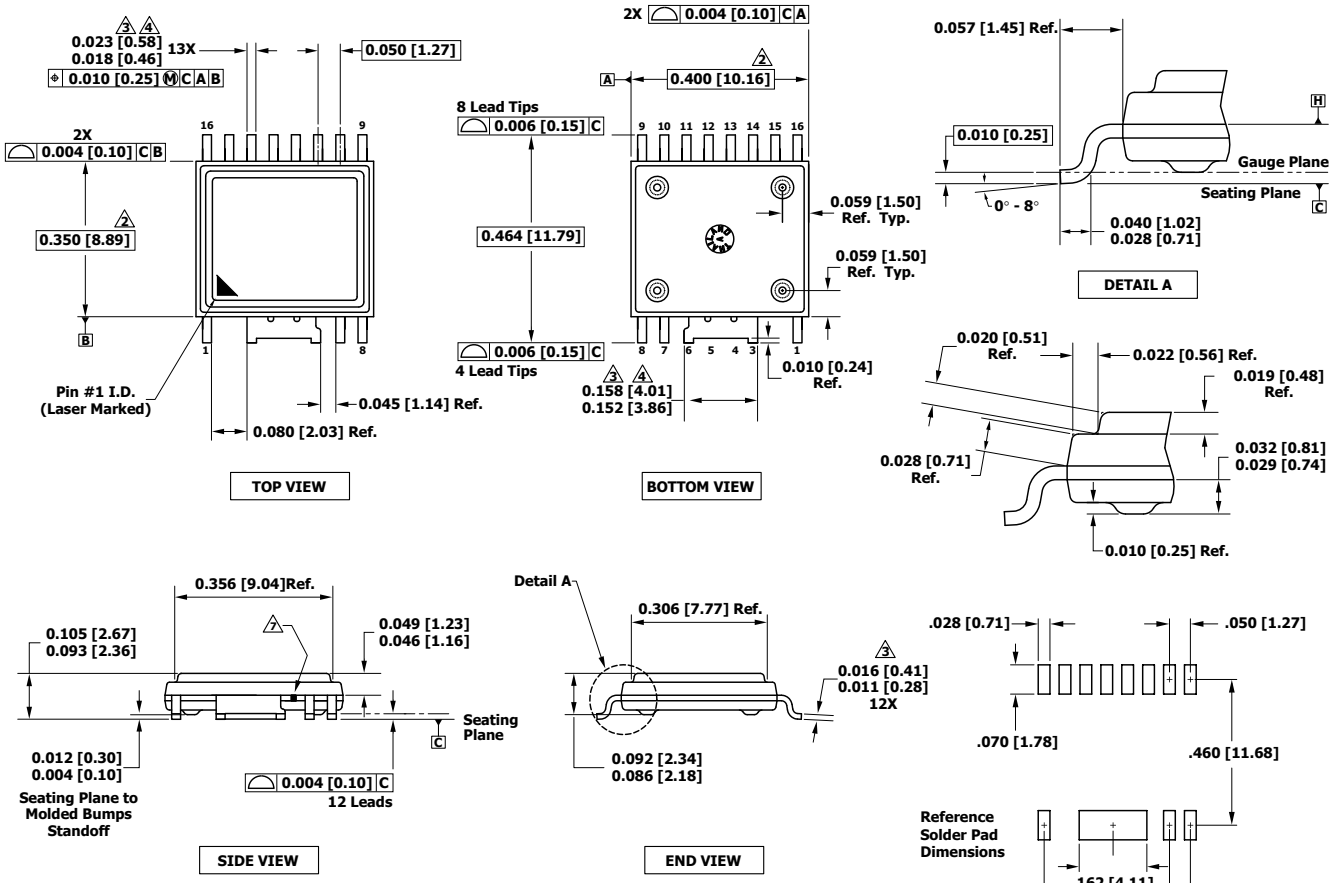

Notes:

1. Dimensioning and tolerancing per ASME Y14.5M-1994.
2. Dimensions noted are determined at the outermost extremes of the plastic body exclusive of mold flash, tie bar burrs, gate burrs, and inter-lead flash, but including any mismatch between the top and bottom of the plastic body. Maximum mold protrusion is 0.007 [0.18] per side.
3. Dimensions noted are inclusive of plating thickness.
4. Does not include inter-lead flash or protrusions.
5. Controlling dimensions in inches [mm].
6. Datums A and B to be determined in Datum H.
7. Exposed metal at the plastic package body outline/surface between leads 6 and 7, connected internally to wide lead 3/4/5/6.

PI-6995-051716
POD-eSOP-R16B Rev B

MSL Table

Part Number	MSL Rating
SIC118xKQ	3

ESD and Latch-Up Table

Test	Conditions	Results
Latch-up at 125 °C	AEC-Q100-002	> ±100 mA or > 1.5 × V_{MAX} on all pins
Human Body Model ESD	AEC-Q100-002	> ±2000 V on all pins
Charged Device Model ESD	AEC-Q100-002	> ±500 V on all pins

IEC 60664-1 Rating Table

Parameter	Conditions	Specifications
Basic Isolation Group	Material Group	I
Installation Classification	Rated mains RMS voltage ≤ 150 V	I - IV
	Rated mains RMS voltage ≤ 300 V	I - IV
	Rated mains RMS voltage ≤ 600 V	I - IV
	Rated mains RMS voltage ≤ 1000 V	I - III (SIC1182KQ only)

Electrical Characteristics (EMI) Table

Parameter	Symbol	Conditions	Min	Typ	Max	Units
Common-Mode Transient Immunity, Logic High	CM_H	Typical values measured according to Figure 11 and Figure 12. Maximum values are design values assuming trapezoid waveforms.		-35 / 50	-100 / 100	kV/µs
Common-Mode Transient Immunity, Logic Low	CM_L					
Variable Magnetic Field Immunity	H_{HPEAK}	See Note 11		1000		A/m
	H_{LPEAK}					

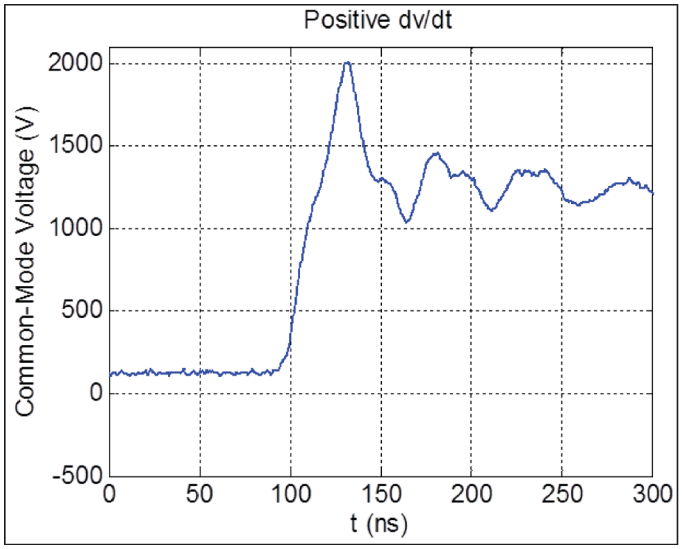

Figure 11. Applied Common Mode Pulses for Generating Positive dv/dt (Shown for SIC1182KQ).

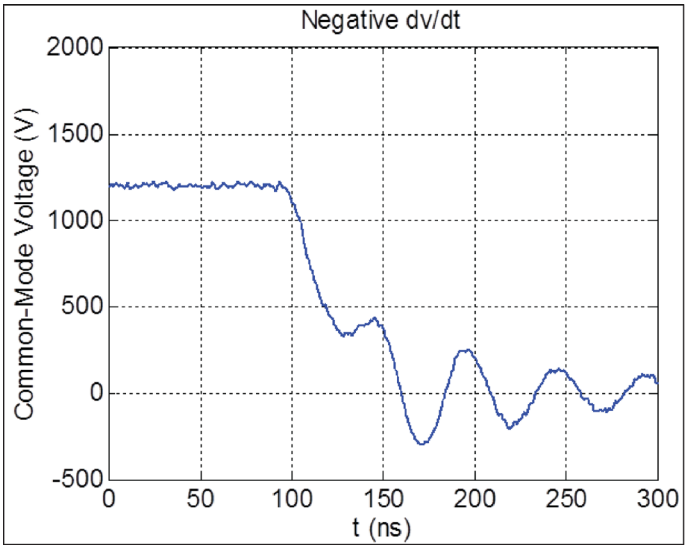

Figure 12. Applied Common Mode Pulses for Generating Negative dv/dt (Shown for SIC1182KQ).

Regulatory Information Table

Product	VDE	UL	CSA
SIC1181KQ	Pending certification to DIN VDE V 0884-11 (VDE V 0884-11):2017-01	UL recognition under UL 1577 Component Recognition Program	CSA Component Acceptance Service No. 5A
	Reinforced insulation for Max. Transient Isolation voltage 6 kV, Max. Surge Isolation voltage 6 kV, Max. Repetitive Peak Isolation voltage 750 V	Single protection, 5000 V_{RMS} dielectric voltage withstand	Single protection, 5000 V_{RMS} dielectric voltage withstand
	File No. Pending	File No. E358471	File No. E358471
SIC1182KQ	Pending certification to DIN VDE V 0884-11 (VDE V 0884-11):2017-01	UL recognition under UL 1577 Component Recognition Program	CSA Component Acceptance Service No. 5A
	Reinforced insulation for Max. Transient Isolation voltage 8 kV, Max. Surge Isolation voltage 8 kV, Max. Repetitive Peak Isolation voltage 1200 V	Single protection, 5000 V_{RMS} dielectric voltage withstand	Single protection, 5000 V_{RMS} dielectric voltage withstand
	File No. Pending	File No. E358471	File No. E358471

Part Ordering Information

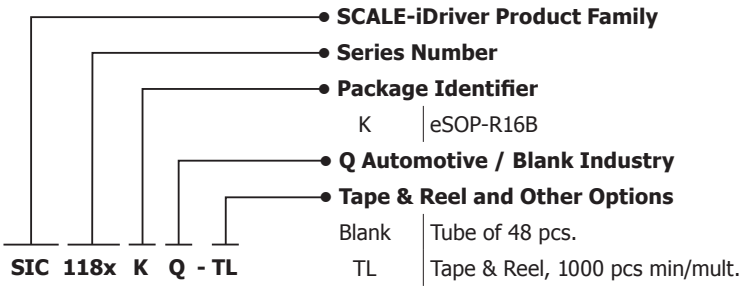

Notes

Revision	Notes	Date
A	Code A release.	10/19
B	Updated UL and CSA regulatory information.	11/19

For the latest updates, visit our website: www.power.com

Power Integrations reserves the right to make changes to its products at any time to improve reliability or manufacturability. Power Integrations does not assume any liability arising from the use of any device or circuit described herein. POWER INTEGRATIONS MAKES NO WARRANTY HEREIN AND SPECIFICALLY DISCLAIMS ALL WARRANTIES INCLUDING, WITHOUT LIMITATION, THE IMPLIED WARRANTIES OF MERCHANTABILITY, FITNESS FOR A PARTICULAR PURPOSE, AND NON-INFRINGEMENT OF THIRD PARTY RIGHTS.

Patent Information

The products and applications illustrated herein (including transformer construction and circuits external to the products) may be covered by one or more U.S. and foreign patents, or potentially by pending U.S. and foreign patent applications assigned to Power Integrations. A complete list of Power Integrations patents may be found at www.power.com. Power Integrations grants its customers a license under certain patent rights as set forth at www.power.com/ip.htm.

Life Support Policy

POWER INTEGRATIONS PRODUCTS ARE NOT AUTHORIZED FOR USE AS CRITICAL COMPONENTS IN LIFE SUPPORT DEVICES OR SYSTEMS WITHOUT THE EXPRESS WRITTEN APPROVAL OF THE PRESIDENT OF POWER INTEGRATIONS. As used herein:

1. A Life support device or system is one which, (i) is intended for surgical implant into the body, or (ii) supports or sustains life, and (iii) whose failure to perform, when properly used in accordance with instructions for use, can be reasonably expected to result in significant injury or death to the user.
2. A critical component is any component of a life support device or system whose failure to perform can be reasonably expected to cause the failure of the life support device or system, or to affect its safety or effectiveness.

Power Integrations, the Power Integrations logo, CAPZero, ChiPhy, CHY, DPA-Switch, EcoSmart, E-Shield, eSIP, eSOP, HiperPLC, HiperPFS, HiperTFS, InnoSwitch, Innovation in Power Conversion, InSOP, LinkSwitch, LinkZero, LYTSwitch, SENZero, TinySwitch, TOPSwitch, PI, PI Expert, PowiGaN, SCALE, SCALE-1, SCALE-2, SCALE-3 and SCALE-iDriver, are trademarks of Power Integrations, Inc. Other trademarks are property of their respective companies. ©2019, Power Integrations, Inc.

Power Integrations Worldwide Sales Support Locations

World Headquarters
5245 Hellyer Avenue
San Jose, CA 95138, USA
Main: +1-408-414-9200
Customer Service:
Worldwide: +1-65-635-64480
Americas: +1-408-414-9621
e-mail: usasales@power.com

China (Shanghai)
Rm 2410, Charity Plaza, No. 88
North Caoxi Road
Shanghai, PRC 200030
Phone: +86-21-6354-6323
e-mail: chinasales@power.com

China (Shenzhen)
17/F, Hivac Building, No. 2, Keji Nan
8th Road, Nanshan District,
Shenzhen, China, 518057
Phone: +86-755-8672-8689
e-mail: chinasales@power.com

Germany (AC-DC/LED Sales)
Einsteinring 24
85609 Dornach/Aschheim
Germany
Tel: +49-89-5527-39100
e-mail: eurosales@power.com

Germany (Gate Driver Sales)
HellwegForum 1
59469 Ense
Germany
Tel: +49-2938-64-39990
e-mail: igbt-driver.sales@power.com

India
#1, 14th Main Road
Vasanthanagar
Bangalore-560052 India
Phone: +91-80-4113-8020
e-mail: indiasales@power.com

Italy
Via Milanese 20, 3rd. Fl.
20099 Sesto San Giovanni (MI) Italy
Phone: +39-024-550-8701
e-mail: eurosales@power.com

Japan
Yusen Shin-Yokohama 1-chome Bldg.
1-7-9, Shin-Yokohama, Kohoku-ku
Yokohama-shi,
Kanagawa 222-0033 Japan
Phone: +81-45-471-1021
e-mail: japansales@power.com

Korea
RM 602, 6FL
Korea City Air Terminal B/D, 159-6
Samsung-Dong, Kangnam-Gu,
Seoul, 135-728, Korea
Phone: +82-2-2016-6610
e-mail: koreasales@power.com

Singapore
51 Newton Road
#19-01/05 Goldhill Plaza
Singapore, 308900
Phone: +65-6358-2160
e-mail: singaporesales@power.com

Taiwan
5F, No. 318, Nei Hu Rd., Sec. 1
Nei Hu Dist.
Taipei 11493, Taiwan R.O.C.
Phone: +886-2-2659-4570
e-mail: taiwansales@power.com

UK
Building 5, Suite 21
The Westbrook Centre
Milton Road
Cambridge
CB4 1YG
Phone: +44 (0) 7823-557484
e-mail: eurosales@power.com