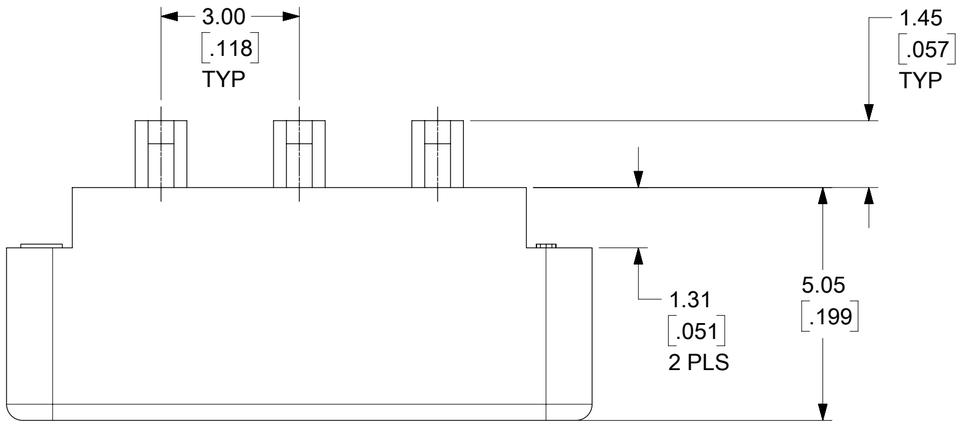

NOTES:
1) MATERIAL:
UNFILLED NYLON, RATED UL94V-2, IEC60335-1 GLOW WIRE CAPABLE, COLOR: NATURAL(WHITE).
2) FINISH: NONE
3) PRODUCT SPECIFICATION: PS-43045
4) PACKAGING SPECIFICATION: BULK PER 1729530001-PK
5) FOR USE WITH: 172952-XX02 RECEPTACLE OR 203632-XX1X PLUG HOUSINGS. NEVER USE WITHOUT TPA.
6) THIS PART CONFORMS TO CLASS B REQUIREMENTS OF COSMETIC SPEC PS-45499-002
7) TEXT ON PART IS FOR REFERENCE ONLY. TEXT AND TEXT LOCATION MAY VARY DEPENDING ON PART NUMBER AND/OR TOOL.
8) BOW 0.38 / .015 MAX PER 25.4 / 1.00 ON SURFACE C
9) CIRCUIT SIZE INDICATES THE SIZE OF THE MATCHING DUAL-ROW RECEPTACLE HOUSING. TWO TPA STRAPS ARE REQUIRED FOR EACH RECEPTACLE HOUSING.
10) SEE SD-172952-002 (RECEPTACLE) OR 2036320010-SD (PLUG) FOR INSTALLATION INSTRUCTIONS

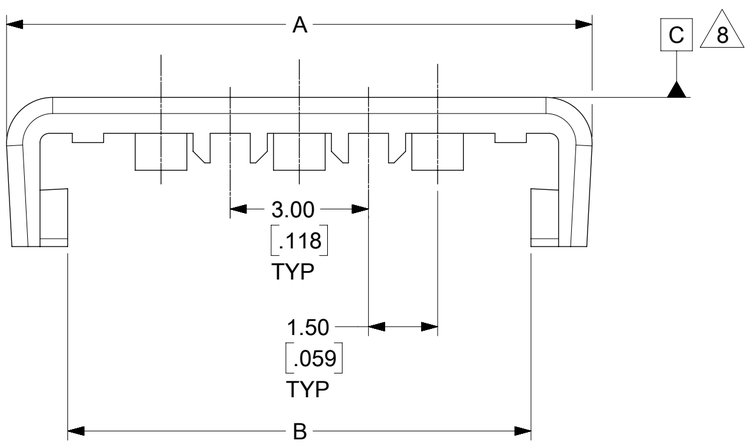

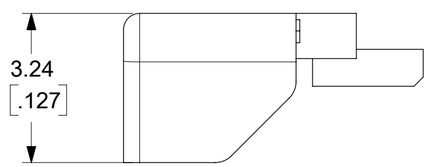

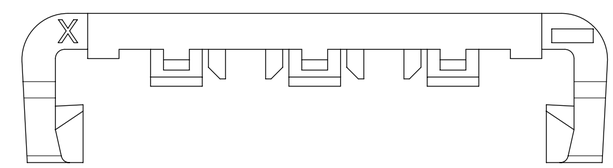

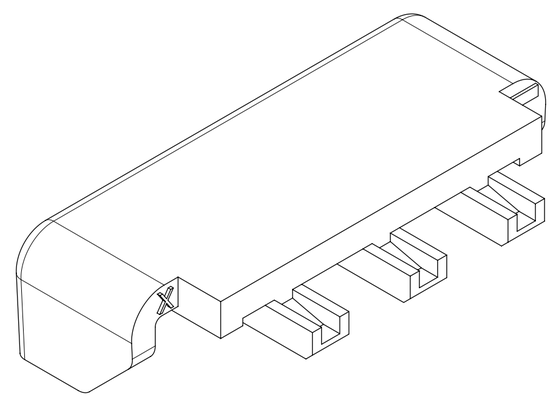

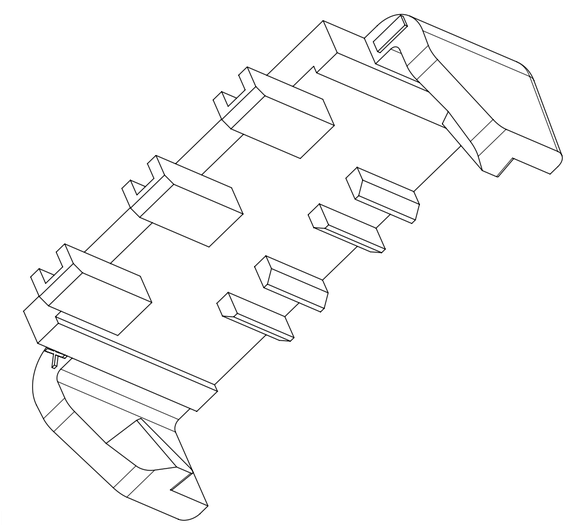

172953-0602 SHOWN

CKT SIZE 9	PART NUMBER	DIM A ±0.51/±.020	DIM B ±0.38/±.015
24	172953-2402	39.70 / 1.563	37.05 / 1.459
22	172953-2202	36.70 / 1.445	34.05 / 1.341
20	172953-2002	33.70 / 1.327	31.05 / 1.222
18	172953-1802	30.70 / 1.209	28.05 / 1.104
16	172953-1602	27.70 / 1.091	25.05 / .986
14	172953-1402	24.70 / .973	22.05 / .868
12	172953-1202	21.70 / .854	19.05 / .750
10	172953-1002	18.70 / .736	16.05 / .632
8	172953-0802	15.70 / .618	13.05 / .514
6	172953-0602	12.70 / .500	10.05 / .396
4	172953-0402	9.70 / .382	7.05 / .278

DOCUMENT STATUS	P1	RELEASE DATE	2018/09/20 15:49:08

THIS DRAWING CONTAINS INFORMATION THAT IS PROPRIETARY TO MOLEX ELECTRONIC TECHNOLOGIES, LLC AND SHOULD NOT BE USED WITHOUT WRITTEN PERMISSION

DIMENSION UNITS	SCALE
MM/IN	10:1

GENERAL TOLERANCES (UNLESS SPECIFIED)

	MM	INCH
4 PLACES	±	±
3 PLACES	±	± 0.01
2 PLACES	± 0.25	± 0.015
1 PLACE	± 0.38	±
0 PLACES	±	±
ANGULAR TOL	± 0.5 °	

DRAFT WHERE APPLICABLE MUST REMAIN WITHIN DIMENSIONS

CURRENT REV DESC: CHANGE COLOR

EC NO: 602458
DRWN: RLALSANGI 2018/02/07
CHK'D: SSOUSEK 2018/09/12
APPR: FSMITH 2018/09/20

INITIAL REVISION:
DRWN: MCOLE 2016/02/24
APPR: BPISZCZOR 2016/03/24

THIRD ANGLE PROJECTION | DRAWING: C-SIZE | SERIES: 172953

molex

MICRO-FIT DUAL ROW TPA GLOW WIRE FOR RECEPTACLE AND PLUG HOUSINGS

PRODUCT CUSTOMER DRAWING

DOCUMENT NUMBER	DOC TYPE	DOC PART	REVISION
SD-172953-002	PSD	001	B

MATERIAL NUMBER	CUSTOMER	SHEET NUMBER
SEE CHART	GENERAL MARKET	1 OF 1

FORMAT: Eng-lega-master-tb-prod-C
REVISION: D
DATE: 2017/10/06