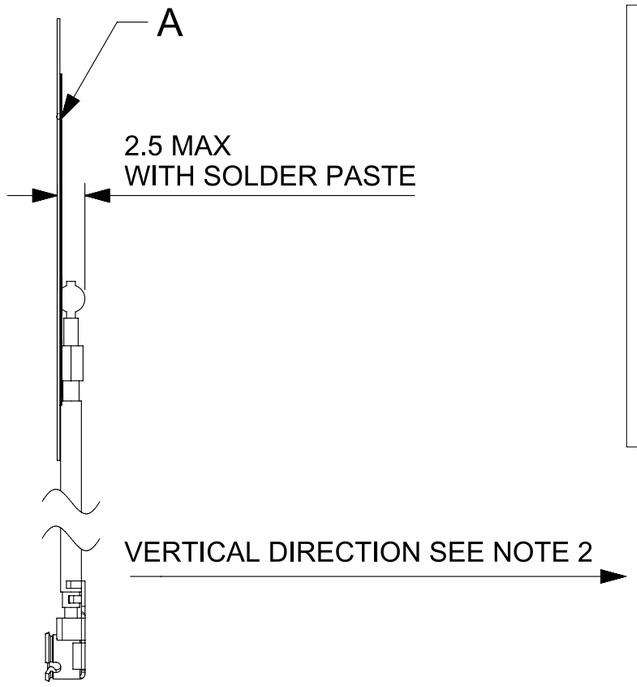

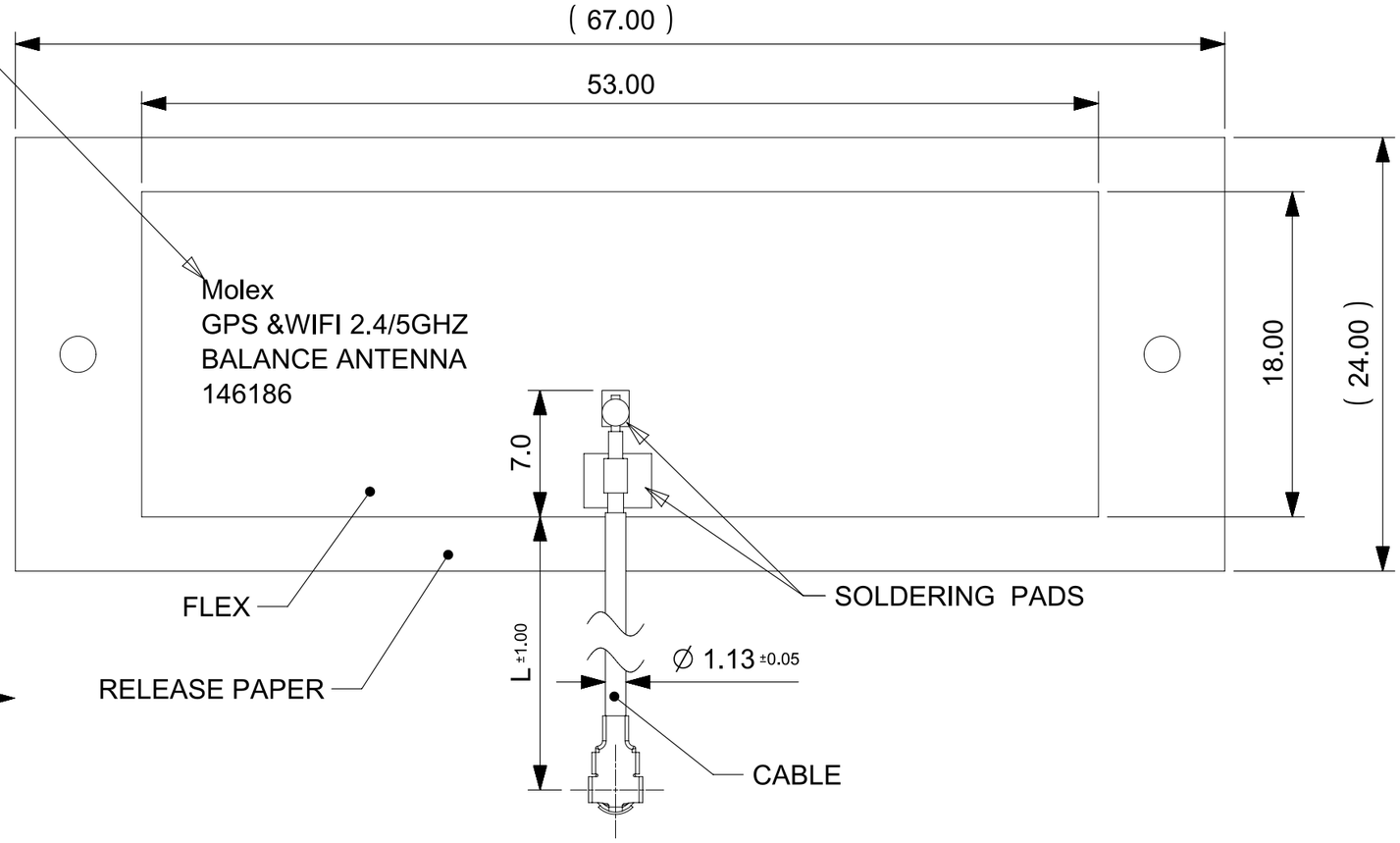

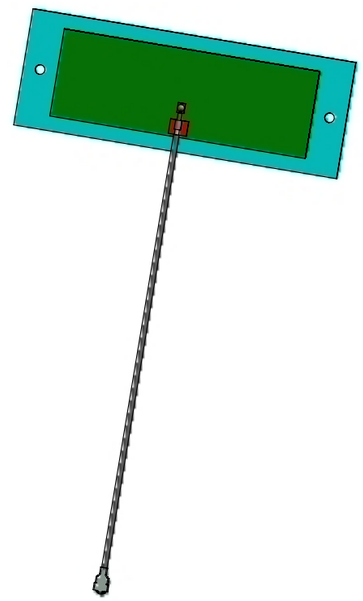

3D VIEW

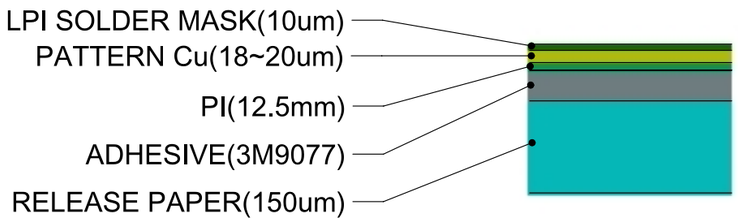

DETAIL A
FLEX LAYER

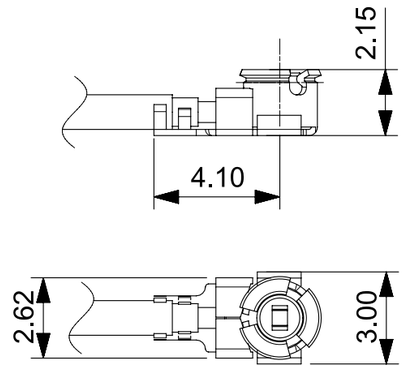

CONNECTOR

ITEM	CABLE TYPE	CABLE LENGTH"L"
1	CABLE 50mm	43mm
2	CABLE 100mm	93mm
3	CABLE 150mm	143mm
4	CABLE 200mm	193mm
5	CABLE 250mm	243mm
6	CABLE 300mm	293mm

NOTE:
1.MATERIAL
FLEX:53mm*18mm
CONNECTOR:OD1.13,2.5H UFL CONNECTOR(COLD PLATED)
2.CAN NOT LIFT UP CABLE IN VERTICAL DIRECTION.
3.Ni&Au PLATING IN THE SOLDER PAD AREA:Ni:1~3um,Au:Min 0.025um THICKNESS.
4.SOLDER MASK:BLACK.
5.APPLICATION SPEC PLEASE REFER TO AS OF AS-146186-100
6.PRODUCT SPEC PLEASE REFER TO PS OF PS-146186-100
7.PACKAGING SPEC REFER TO PK OF PK-146186-001

THIS DRAWING CONTAINS INFORMATION THAT IS PROPRIETARY TO MOLEX ELECTRONIC TECHNOLOGIES, LLC AND SHOULD NOT BE USED WITHOUT WRITTEN PERMISSION

QUALITY SYMBOLS: EA = 0; EC = 0; EP = 0; ▼ = 0; C = 0; ☒ = 0; ■ = 0; C = 0

EC DESCRIPTION
EC NO: 122398 2017/09/22
DRWN: Kang Cheng 2017/09/22
CHK'D: Colin Xu 2017/09/22
APPR: Stary Song
REV: C

GENERAL TOLERANCES (UNLESS SPECIFIED)
ANGULAR TOL ± 0.5 °

4 PLACES	±	
3 PLACES	±	0.05
2 PLACES	±	0.15
1 PLACE	±	0.2
0 PLACES	±	0.5

DRAFT WHERE APPLICABLE MUST REMAIN WITHIN DIMENSIONS

DIMENSION UNITS	mm
SCALE	3:1
DRWN BY	Kang Cheng
DATE	2017/09/22
CHK'D BY	Colin Xu
DATE	2017/09/22
APPR BY	Stary Song
DATE	2017/09/22
DRAWING SIZE	A3
THIRD ANGLE PROJECTION	

molex®

SD FOR GPS/WIFI (2.4/5GHz) COMBO BALANCE FLEX ANTENNA

PRODUCT DESIGN DRAWING

SERIES	MATERIAL NUMBER	CUSTOMER
146186	SEE TABLE	GENERAL MARKET

DOCUMENT NUMBER	DOC TYPE	DOC PART	SHEET NUMBER
SD-146186-050	PSD	SD	1 OF 1

RELEASE STATUS		RELEASE DATE	

FORMAT: tb-prod-A3
REVISION: G
DATE: 2017/02/06