PART NUMBER	ENGINEERING NUMBER	FINISHED LENGTH
1200660424	885030A09M003	0.3M [1FT]
1200660443	885030A09M200	20M [65FT 7 IN]
1202010018	885030A09M400	40M [131FT 2 IN]

D1

FEMALE FACE VIEW

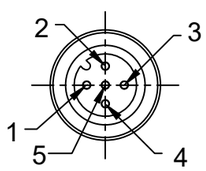

MALE FACE VIEW

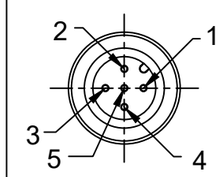

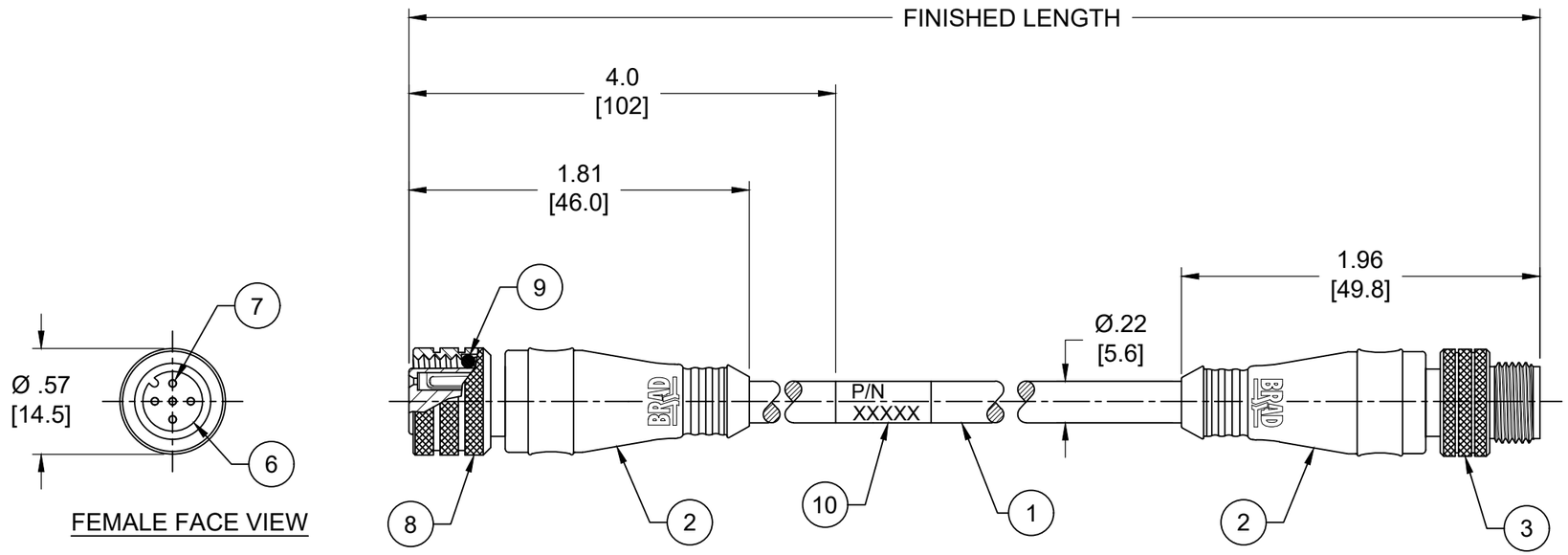

NOTES:
1. MATERIAL: AS NOTED
2. FINISH: AS NOTED
3. ELECTRICAL:
   VOLTAGE: 250 VAC/VDC
   CURRENT: 4A
4. TEMP RATING: -20°TO +105°C
5. PROTECTION: IP67 (WHEN MATED)
6. COUPLING THREAD: M12X1
7. UL RECOGNIZED FILE: E152210 (D1)
   CSA CERTIFIED FILE: LR6837
8. ALL DIMENSIONS ARE FOR REFERENCE
   UNLESS TOLERANCED OR NOTED OTHERWISE

ITEM	DESCRIPTION	MATERIAL	FINISH
10	WRAP LABEL	VINYL	BLACK/YELLOW
9	O-RING	VITON	RED
8	M12 COUPLING NUT, FEMALE	BRASS	NICKEL PLATED
7	CONTACT SOCKET	COPPER ALLOY	GOLD OVER NICKEL
6	FEMALE INSERT	PUR	BLACK
5	CONTACT PIN	COPPER ALLOY	GOLD OVER NICKEL
4	MALE INSERT	PUR	BLACK
3	M12 COUPLING NUT, MALE	BRASS	NICKEL PLATED
2	OVERMOLDS	PUR	YELLOW
1	CABLE, 5P, 22AWG	PVC JACKET	YELLOW

PART NUMBER LEGEND

885030A09M003

FINISHED LENGTH
M003 = 0.3 METER
M010 = 1 METER
M100 = 10 METER

WIRING DIAGRAM

CABLE LENGTH TOLERANCES
<.3M [1FT]: +19mm-0 [+.75in-0]
.3 - .9M [1 - 3FT]: +44.5mm-0 [+1.75in-0]
.9 - 1.8M [3 - 6FT]: +55.6mm-0 [+2.19in-0]
1.8 - 3.7M [6 - 12FT: +88.9mm-0 [+3.50in-0]
3.7 - 7.3M [12 - 24FT]: +165.1mm-0 [+6.50in-0]
7.3-14.6M [24 - 48FT]: +317.5mm-0 [+12.50in-0]
14.6 - 30.5M [48-100FT]: +622.3mm-0 [+24.50in-0]
OVER 30M [100FT] +2% OF FINISHED LENGTH

THIS DRAWING CONTAINS INFORMATION THAT IS PROPRIETARY TO MOLEX ELECTRONIC TECHNOLOGIES, LLC AND SHOULD NOT BE USED WITHOUT WRITTEN PERMISSION

FUNCTIONAL SYMBOLS
FA=0
FC=0
FP=0
DIVISIONAL SYMBOLS

DIMENSION UNITS: INCH/MM
SCALE: NTS

GENERAL TOLERANCES (UNLESS SPECIFIED)

	mm	INCH
4 PLACES	±----	±----
3 PLACES	±----	±----
2 PLACES	±----	±----
1 PLACE	±----	±----
0 PLACES	±----	±----
ANGULAR TOL ±	---- °	

DRAFT WHERE APPLICABLE MUST REMAIN WITHIN DIMENSIONS

CURRENT REV DESC: ADDED UL & CSA NUMBER. MODIFIED PART NUMBER CHART

EC NO: 702709
DRWN: ABENJAMINLW 2021/10/21
CHK'D: RSTONE 2022/04/11
APPR: BWOODMAN 2022/04/16

INITIAL REVISION:
DRWN: LHARTMAN 2009/07/28
APPR: JFMURPHY 2009/08/10

molex

MICRO-CHANGE CORDSET, M12
5 POLE, MALE- FEMALE, STRAIGHT,
SINGLE KEY, #22 AWG

PRODUCT CUSTOMER DRAWING

DOCUMENT NUMBER	DOC TYPE	DOC PART	REVISION
SD-120066-007	PSD	001	D1

THIRD ANGLE PROJECTION	DRAWING	SERIES	MATERIAL NUMBER	CUSTOMER	SHEET NUMBER
	B-SIZE	120066	SEE P/N CHART	GENERAL MARKET	1 OF 1

DOCUMENT STATUS	P1	RELEASE DATE	2022/04/16 16:04:39

FORMAT: IN-ACAD-tb-prod-B
REVISION: B
DATE: 2020/01/14