E-T-A ESX10-TC-DC 12 V electronic circuit protector

Description

E-T-A's ESX10-TC extends our product group of electronic overcurrent protection devices for DC 12 V applications.

ESX10-T helps to save time and costs. The track-mountable circuit protector's standard version provides one channel in the current ratings 1 A through 10 A. By means of busbars, the modular device allows construction of multi-channelled solutions and configuration of single or group signalling. E-T-A's ESX10-T electronic circuit protector is only 12.5 mm wide and selectively protects all DC 12 V load circuits, thereby increasing the uptime of machines and systems. This is achieved by a combination of active electronic current limitation in the event of a short circuit and overload disconnection typically from 1.1 times rated current. The ESX10-T responds faster than frequently used DC 12 V switch mode power supplies without tripping fast and thus prevents disastrous voltage dips of the supply. It works with a single trip curve for all loads. Even capacitive loads up to 75,000 µF can be handled very easily. The integral fail-safe element (fuse) is adjusted to the circuit breaker's rated current and can thus very easily be synchronised with the wired cable cross section. This makes planning much easier.



ESX10-TC

Features

- track-mountable
- active linear current limitation
- capacitive loads up to 75,000 µF
- fixed current ratings 1 A ... 10 A
- approvals: UL, DNV GL
- OPTION: Control inputs, signalling
- OPTION: ATEX and IECEx approval

Your benefits

- Increases machine uptime through clear failure detection and stable power supply
- Reduces downtimes through quick fault resolution
- Simplifies planning through clear sizes and ratings
- Saves costs and time through fast and flexible mounting including integral power distribution solution

Approvals

Instructions

Please observe separate user manual:
http://www.e-t-a.de/qr1007/

Compliance

4

Technical data (T_{amb} = 25 °C, U_B = DC 12 V)

Operating data	
Operating voltage U_B	DC 12 V (9...18 V)
Current ratings I_N	1 A, 1 A, 2 A, 3 A, 4 A, 6 A, 10 A
Standby current I_0	in ON condition: typically 15 ... 20 mA
Visual status indication via	• multicoloured LED: **green:** - device is ON (S1 = ON) - load circuit/Power-MOSFET connected **orange:** - overload or short circuit until electronic disconnection **red:** - device switched OFF electronically - load circuit/power MOSFET disconnected - undervoltage (< 3.25 V) - after switch-on until the end of the switch-on delay period **OFF** - manually switched off (S1 = OFF) or device is dead-voltage • status output SF (optional) • on/off position of the switch S1
Load circuit	
Load output	power MOSFET switching output (plus switching)
Overload disconnection (OL)	typically 1.1 x I_N (1.05...1.35 x I_N)
Short circuit current I_{SC}	active current limitation (see table 1)
Trip times	see time/current characteristic for electronic disconnection typically 3 s at I_{load} > 1.1 x I_N typically 50 ms ... 3 s at I_{load} > 1.8 x I_N (or 1.5 x I_N)
Temperature disconnection	internal temperature monitoring with electronic disconnection
Low voltage monitoring of load output	with hysteresis, at voltage dips < 500 ms no reset required: load »OFF« at U_B < 3.2 V
Switch-on delay t_{Start}	typically 10 ms after each ON operation, after reset and after applying of U_B
Disconnection of load circuit	electronic disconnection upon overload / short circuit
Free-wheeling diode	external free-wheeling diode recommended for inductive load
Parallel connection of several load outputs	not permitted
Status output SF	**ESX10-T.-114/-124**
Electrical data	plus-switching signal output, switches U_B to terminal 23 Current ratings: DC 12 V/max. 0.2 A (short circuit proof) The status output is connected internally with a 10 kOhm resistor against 0 V.
Status OUT	ESX10-TC-114/-124 (Signal Status OUT), + 12 V = switch S1 is ON, load output ON 0 V = S1 is ON, load output locked and/ or switch S1 is OFF red LED lighted
OFF condition	0 V level at status output whenever: • switch S1 is in ON position, but device is still in ON delay • Switch S1 in OFF position, or control signal OFF, device is switched off • No operating voltage U_B

Technical data (T_{amb} = 25 °C, U_B = DC 12 V)

Reset input RE	**ESX10-T.-124**
Electrical data	voltage max. DC 18 V high > DC 4.5 V ≤ DC 18 V low ≤ DC 2.5 V > 0 V current consumption typically 1.4 mA (DC 12 V) min. pulse duration 10 ms
Reset signal RE terminal 22	with the falling edge of a + DC 12 V pulse the electronically blocked ESX10-TC-124 can be remotely controlled via an external switch. A joint reset signal can also be applied to more than one device at a time. Devices in ON condition will remain unaffected.
Control input IN+	**ESX10-TC-114**
Electrical data	as reset input RE
Control signal IN+ Terminal 21	12 V level (HIGH): device is switched on by a remote ON/OFF signal. 0 V level (LOW) device is switched off by a remote ON/OFF signal.
Switch S1 ON/OFF	device can only be switched on with S1 when a HIGH level is applied to IN+
General data	
Fail-safe element	back-up fuse for ESX10-T not required, since there is an integral redundant fail-safe element (protective element)

Screw terminals	**LINE+/LOAD+/0V**
Screw terminals	M4
max. cable cross section	
rigid and flexible	0.5 - 16 mm²
flexible with wire end ferrule w/wo plastic sleeve	0.5 mm – 10 mm²
multi-lead connection (2 identical cables)	
rigid / flexible	0.5- 4 mm²
flexible with wire end ferrule without plastic sleeve	0.5 – 2.5 mm²
flexible with TWIN wire end ferrule with plastic sleeve	0.5- 6 mm²
stripping length	10 mm
Tightening torque (EN60934)	1.5- 1.8 Nm
Terminals	**signal terminals**
Screw terminals	M3
max. cable cross section	
flexible with wire end ferrule w/wo plastic sleeve	0.25 – 2.5 mm²
Stripping length	8 mm
Tightening torque (EN60934)	0.5- 0.6 Nm

Housing material	moulded
Mounting	symmetrical rail to EN 60715-35x7.5
Ambient temperature	-25...60 °C [1] (without condensation, cf. EN 60204-1) [1] ambient temperature range can differ depending on approvals.
Storage temperature	-40...70 °C
Humidity	96 hrs / 95% RH 40°C to IEC 60068-2-78, test Cab climate class 3K3 to EN60721
Vibration	3g test to IEC 60068-2-6, test Fc
Protection class	housing IP20 EN60529 terminals IP20 DIN 60529

Technical data (T_{amb} = 25 °C, U_B = DC 12 V)

EMC requirements (EMC directive, CE marking)	noise emission EN 61000-6-3 noise immunity: EN 61000-6-2
Insulation co-ordination (IEC 60934)	0.5 kV / pollution degree 2 reinforced insulation at operating area
Dielectric strength	max. DC 18 V (load circuit)
Insulation resistance (OFF condition:)	n/a, only electronic disconnection
Conformity	CE marking to 2014/30/EU
Dimensions (w x h x d)	12.5 x 80 x 83 mm
Mass	approx. 65 g

Ordering information

Type no.
ESX10 Electronic Circuit Protector, with current limitation
- **Mounting**
  - **TC** rail mounting, with signal contact and hole for signal busbars
- **Version**
  - **1** without physical isolation
- **Signal input**
  - **1** with control input IN+ (only ESX10-T.-114)
  - **2** with control reset input RE (only ESX10--124)
- **Signal output**
  - **4** status output SF (only -114, -124)
- **Operating voltage**
  - **DC 12 V** voltage rating DC 12 V
- **Current ratings**
  - **1 A**
  - **2 A**
  - **3 A**
  - **4 A**
  - **6 A**
  - **10 A**
- **Approvals**
  - **E** ATEX/IECEx

ESX10 - TC - 1 2 4 - DC 12 V - 6 A - E ordering example

Notes

- The user has to ensure that the cable cross section of the load circuit in question complies with the current rating of the ESX10-T used.
- In addition special precautions must be taken in the system or machine (e.g. use of a safety PLC) which reliably prevent an automatic re-start of parts of the system (cf. Machinery Directive 2006/42/EG and EN 60204-1, Safety of Machinery). In the event of a failure (short circuit/overload) the load circuit will be disconnected electronically by the ESX10-T.

Information on UL approvals

ESX10-TC-…
UL2367
Solid State Overcurrent Protectors
UL File # E306740

UL 121201
UL File E320024

UL 508, CSA C22.2 No: 14
Auxiliary Devices - Industrial Control Equipment
UL File E322549

E322549
INDUSTRIAL CONTROL EQUIPMENT

Operating Temperature Code T5:
- This equipment is suitable for use in Class I, Division 2, Groups A, B, C and D or non-hazardous locations only

WARNING – EXPLOSION HAZARD:
- Do not disconnect equipment unless power has been removed or the area is known to be non-hazardous.

This device is OPEN type equipment that must be used within a suitable end-use system enclosure, the interior of which is accessible only through the use of a tool. The suitability of the enclosure is subject to investigation by the local Authority Having Jurisdiction at the time of installation.

Wiring to or from this device, which enters or leaves the system enclosure, must utilize wiring methods suitable for Class I, Division 2 Hazardous Locations, as appropriate for the installation.

Approvals ESX10-TC-DC12 V-xxx

Approval authority	Standard	File certificate no.	Voltage ratings	Current rating range
UL	UL 2367	E306740	DC 12 V	1 A … 10 A
UL	UL 121201 (Class ☆, Division 2, Groups A, B, C, D)	E320024	DC 12 V	1 A … 10 A
UL	UL 508 CSA C22.2 No.14	E322549	DC 12 V	1 A … 10 A
DNV GL	CG-0339 (classes: temperature, vibration: B*); humidity, EMC: A)*) with busbars and jumpers	TAE000025Y	DC 12 V	1 A … 10 A
Bureau Veritas	ATEX (EU Directive 2014/34/EU) EN 60079-0 EN 60079-7 EN 60079-15	EPS 18 ATEX 1 127 X	DC 12 V	1 A … 10 A
IECEx	IEC 60079-0 IEC 60079-7 IEC 60079-15	IECEx EPS 18.0059X	DC 12 V	1 A … 10 A

Declaration of Conformity for ATEX version ESX10-TC-...-E

E-T-A Elektrotechnische Apparate GmbH

EU-Konformitätserklärung Nr. 100.218.1053-01
Declaration of Conformity

Wir / We: E-T-A Elektrotechnische Apparate GmbH, Industriestraße 2-8, D-90518 Altdorf, Germany
(Name und Anschrift des Anbieters / supplier's name and address)

erklären in alleiniger Verantwortung, dass das Produkt
declare under our sole responsibility that the product

Elektronische Schutzschalter / Electronic circuit-breaker
Typ/type:
ESX10-1...-E
ESX10-TA...-E
ESX10-TB...-E
ESX10-TC... -E

(Bezeichnung, Typ/Modell, evtl. Spezifikation/ name, type/model, optionally specification)

auf das sich diese Erklärung bezieht, mit den wesentlichen Anforderungen folgender Richtlinie(n) übereinstimmt:
to which this declaration relates, is in conformity with the essential requirements of following Directive(s)

2014/30/EU — EMV-Richtlinie / EMC directive
2014/34/EU — ATEX-Richtlinie / ATEX directive
2011/65/EU — Beschränkung bestimmter gefährlicher Stoffe (RoHS) / Restriction of hazardous substances (RoHS)

Diese Konformitätserklärung folgt den grundlegenden Anforderungen der Norm EN ISO/IEC 17050-1:2010 Konformitätsbewertung - Konformitätserklärung von Anbietern – Teil 1: Allgemeine Anforderungen.

This Declaration of Conformity is following the basic requirements of the standard EN ISO/IEC 17050-1:2010 Conformity assessment - Supplier's declaration of conformity – Part 1: General requirements.

Zur Beurteilung der Übereinstimmung wurde(n) folgende Norm(en) oder normativen Dokumente herangezogen:
For evaluation of the conformity following standard(s) or normative document(s) were consulted:

EN 61000-6-2: 2005 Elektromagnetische Verträglichkeit (EMV) Teil 6-2: Fachgrundnormen – Störfestigkeit für Industriebereiche
Electromagnetic compatibility (EMC) Part 6-2: Generic standards – Immunity for industrial environments

EN 61000-6-3: 2007 +A1:2011 Elektromagnetische Verträglichkeit (EMV) Teil 6-3: Fachgrundnormen – Störaussendung für Wohnbereich, Geschäfts- und Gewerbebereiche sowie Kleinbetriebe
Electromagnetic compatibility (EMC) Part 6-3: Generic standards – Emission standard for residential, commercial and light-industrial environments

EN 60079-0:2012+A11:2013 Explosionsgefährdete Bereiche - Teil 0: Betriebsmittel - Allgemeine Anforderungen/ Explosive atmospheres - Part 0: Equipment - General requirements

EN 60079-7: 2015 Explosionsfähige Atmosphäre - Teil 7: Geräteschutz durch erhöhte Sicherheit "e" / Explosive atmospheres - Part 7: Equipment protection by increased safety "e"

EN 60079-15:2010 Explosionsfähige Atmosphäre - Teil 15: Geräteschutz durch Zündschutzart "n" / Explosive atmospheres - Part 15: Equipment protection by type of protection "n"

E-T-A Elektrotechnische Apparate GmbH • Tel. +49 9187 100 • Fax +49 9187 10398
1/2 form: KE_01.12.2015

E-T-A Elektrotechnische Apparate GmbH

EN ISO/IEC 80079-34:2011 Explosionsgefährdete Bereiche - Teil 34: Anwendung von Qualitätsmanagementsystemen für die Herstellung von Ex-Produkten / Explosive atmospheres. Application of quality systems for equipment manufacture

EN 50581:2012 Technische Dokumentation zur Beurteilung von Elektro- und Elektronikgeräten hinsichtlich der Beschränkung gefährlicher Stoffe
Technical documentation for the assessment of electrical and electronic products with respect to the restriction of hazardous substances

(Titel und/oder Nr. sowie Ausgabedatum der Norm(en) oder der anderen normativen Dokumente / Title and /or number and date of issue of the standard(s) or other normative document(s))

Altdorf, 19.September 2018

ppa. Ralf Dietrich (Mitglied der Geschäftsleitung)
(Name, Position und Unterschrift oder gleichwertige Kennzeichnung des Befugten / name, position and signature or equivalent of authorized person)

(Ort und Datum der Ausstellung / Place and date of issue)

E-T-A Elektrotechnische Apparate GmbH • Tel. +49 9187 100 • Fax +49 9187 10398
2/2 form: KE_01.12.2015

Table 1: Voltage drop, current limitation, max. load current

current rating I_N	typical voltage drop U_{ON} at I_N	active current limitation typically	max. load current: at 100% ON duty	
			T_{amb} = 40 °C	T_{amb} = 60 °C
1 A	80 mV	1.8 x I_N	1 A	1 A
2 A	130 mV	1.8 x I_N	2 A	2 A
3 A	80 mV	1.8 x I_N	3 A	3 A
4 A	100 mV	1.8 x I_N	4 A	4 A
6 A	130 mV	1.8 x I_N	6 A	6 A
10 A	150 mV	1.5 x I_N	10 A	9 A

Note:
When mounted side-by-side without convection the devices can only carry max. 80 % of their rated current continuously (100 % ON duty) due to thermal effect.

Table 2: ESX10-T - product versions

Version		Signal input		Signal output
ESX10-.. DC 12 V		control input ON/OFF + 12 V Control IN+	reset input + 12 V ↓ RE	status output SGF OUT + 12 V = OK
-TC	-114	x		x
-TC	-124		x	x

Dimensions

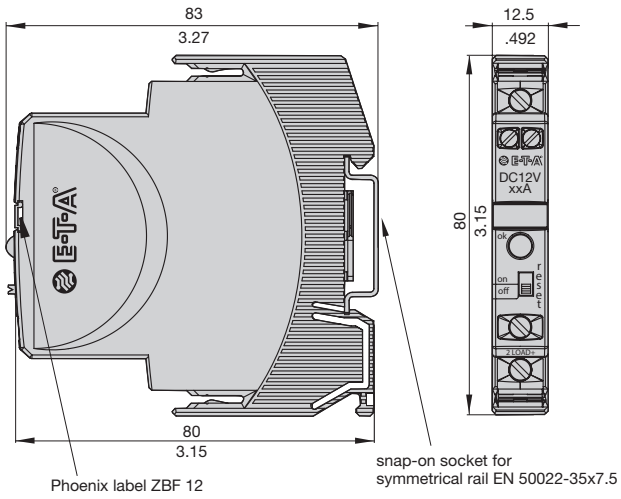

Connection diagram ESX10-TC-124 -DC 12 V (example)

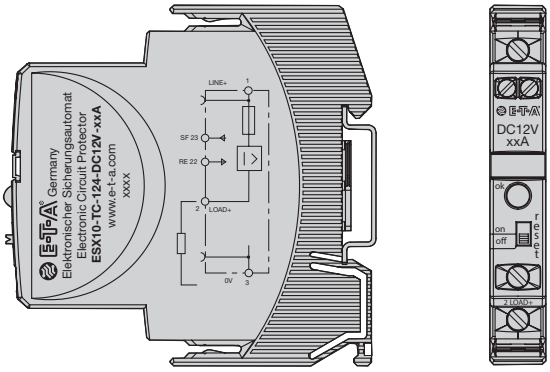

Schematic diagram ESX10-TC-124 voltage DC 12 V (example)

ESX10-TC-124-...

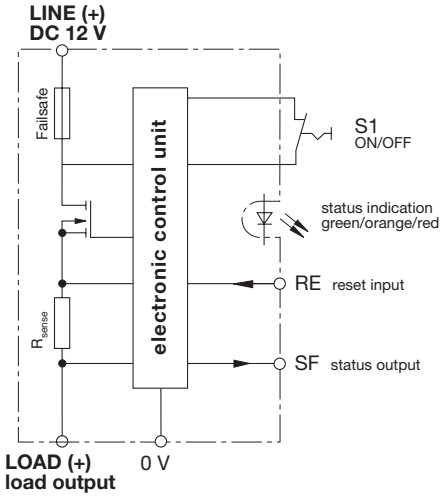

Connection and operation elements ESX10-TC

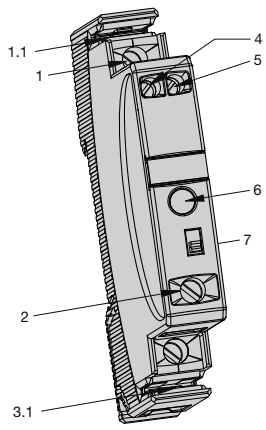

1	LINE + 1 DC 12 V
1.1	LINE + 1 (busbar)
2	LOAD +
3	0 V
3.1	0 V (busbar)
4	21 depending on the version, see data sheet
5	23 depending on the version, see data sheet
6	status LED
7	ON/OFF button (reset)

Time/current characteristic (T_{amb} = 25 °C)

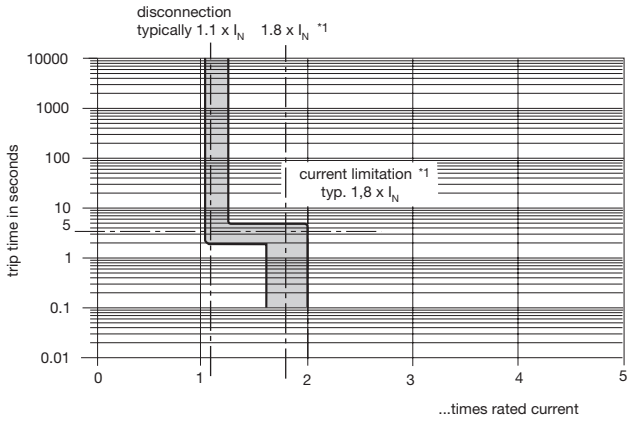

*1 current limitation typically 1.8 x I_N at I_N = 0.5 A...6 A
current limitation typically 1.5 x I_N at I_N = 8 A...10 A

- In a range of 1.1...1.8 x I_N*1) the trip time is typically 3 s.
- The electronic current limitation typically begiins in at 1.8 x I_N. This means: under all overload conditions (independent of power supply and load circuit resistance) typically 1.8 times rated current is applied until disconnection *1). The trip time varies between 50 ms and 3 s depending on the multiple of the current rating or at short circuit (I_K).
- Without the current limitation getting into effect at typically 1.8 x I_N there would be a much higher overcurrent in the event of an overload or short circuit.

ESX10-T signal inputs / outputs / (wiring diagrams)

ESX10-TC-114-DC12V
with control input IN+
(+DC 12 V)
with status output SF
(+12 V = load output ON)

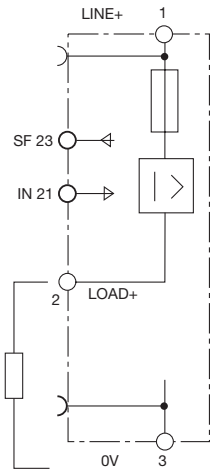

operating condition:
SF +12 V = OK

fault condition:
SF 0 V

ESX10-TC-124-DC12V
with reset input RE
(+DC 12 V ↓)
with status output SF
(+12 V = load output ON)

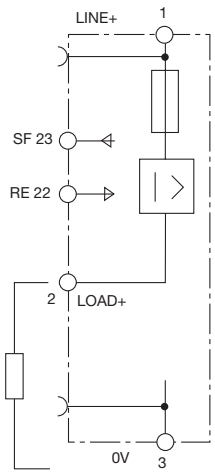

operating condition:
SF +12 V = OK

fault condition:
SF 0 V

4

Mounting examples for ESX10-T

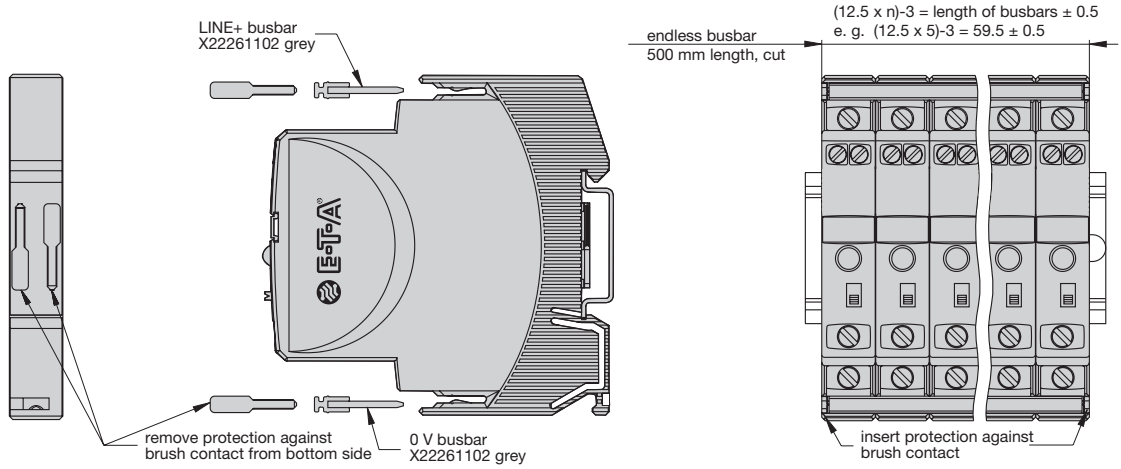

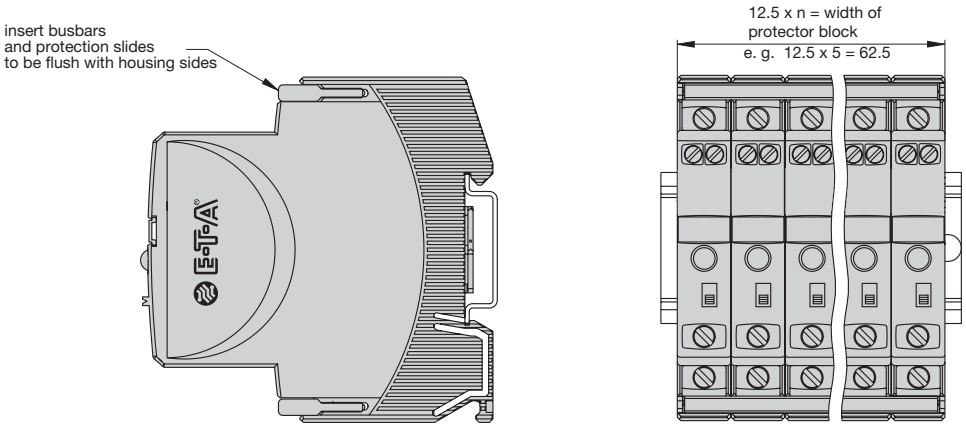

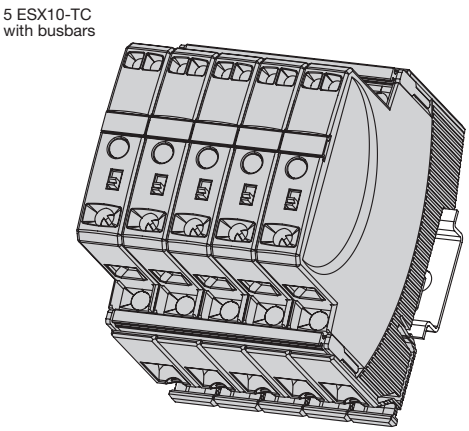

Description of installation:
With a block of devices the busbars have to be inserted before wiring.
Max. 10 plug-in cycles for busbars allowed.

Recommendation:
The line entry busbars and signal busbars should be interrupted after 10 devices and line entry should start a new.

Table of possible busbar lengths
(part no. X 222 611 02 possibly cut to length, see accessories).

Number of devices	2	3	4	5	6	7	8	9	10
Length of rail [mm] ± 0,5 mm	22	34.5	47	59.5	72	84.5	97	109.5	122

Description

The ESX10-T has an integral power distribution system. The following wirings can be carried out with different plug-in type busbars:

- LINE
- 0 V
  Important: The electronic devices ESX10-T require A 0V connection

Accessories

Busbars for LINE+ and 0 V
ampacity with one input I_{max} 50 A
(recommendation: central supply)
ampacity with two inputs I_{max} 63 A
grey insulated, length: 500 mm
part no. X 222 611 02

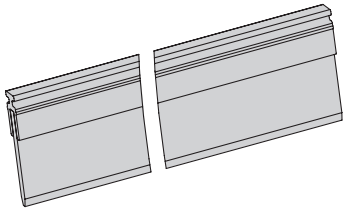

Busbars for LINE+ and 0 V
grey insulated
max. 10 plug-in cycles allowed

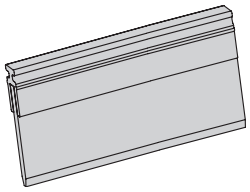

part no. X 222 611 22 **(block of 2 ESX10-Ts),**
length: 22 mm
packaging unit: 10 pcs

part no. X 222 611 34 **(block of 3 ESX10-Ts),**
length: 34.5 mm
packaging unit: 10 pcs

part no. X 222 611 47 **(block of 4 ESX10-Ts),**
length: 47 mm
packaging unit: 10 pcs

part no. X 222 611 59 **(block of 5 ESX10-Ts),**
length: 59.5 mm
packaging unit: 10 pcs

part no. X 222 611 72 **(block of 6 ESX10-Ts),**
length: 72 mm
packaging unit: 4 pcs

part no. X 222 611 97 **(block of 8 ESX10-Ts),**
length: 97 mm
packaging unit: 4 pcs

part no. X 222 611 12 **(block of 10 ESX10-Ts),**
length: 122 mm
packaging unit: 4 pcs

Insulated wire bridge
optional as jumper for ESX10-TC-114.../ESX10-TC-124...
for group signalling

X 223 108 01
Packaging unit: 10 pcs

Connector bus link –K10
suitable for auxiliary contacts (series connection)
X 210 589 02 (1.5 mm², brown),

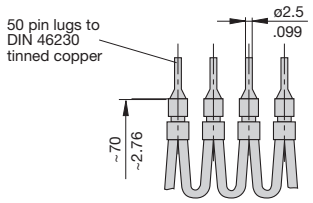

Supply module for LINE+ and 0 V
suitable for ESX10-T... product versions
ampacity I_{max} 50 A
part no. AD-TX-EM01

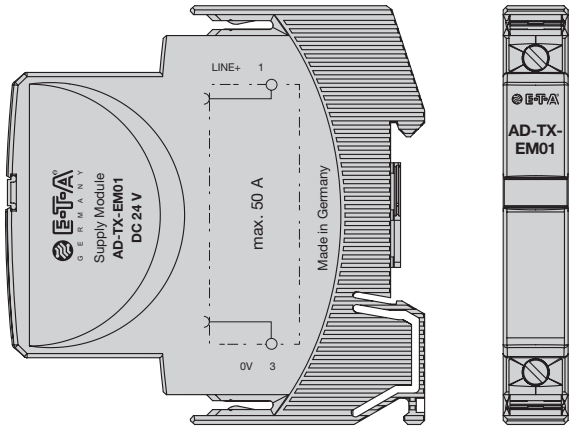

4

All information and data given on our products are accurate and reliable to the best of our knowledge, but E-T-A does not accept any responsibility for the use in applications which are not in accordance with the present specification. E-T-A reserves the right to change specifications at any time in the interest of improved design, performance and cost effectiveness. Dimensions are subject to change without notice. Please enquire for the latest dimensional drawing with tolerances if required. All dimensions, data, pictures and descriptions are for information only and are not binding. Amendments, errors and omissions excepted. Ordering codes of the products may differ from their marking.