DESCRIPTION: M5 FEMALE - CABLE MOUNT - SOLDER CUP - 4 POSITION - SHIELDED

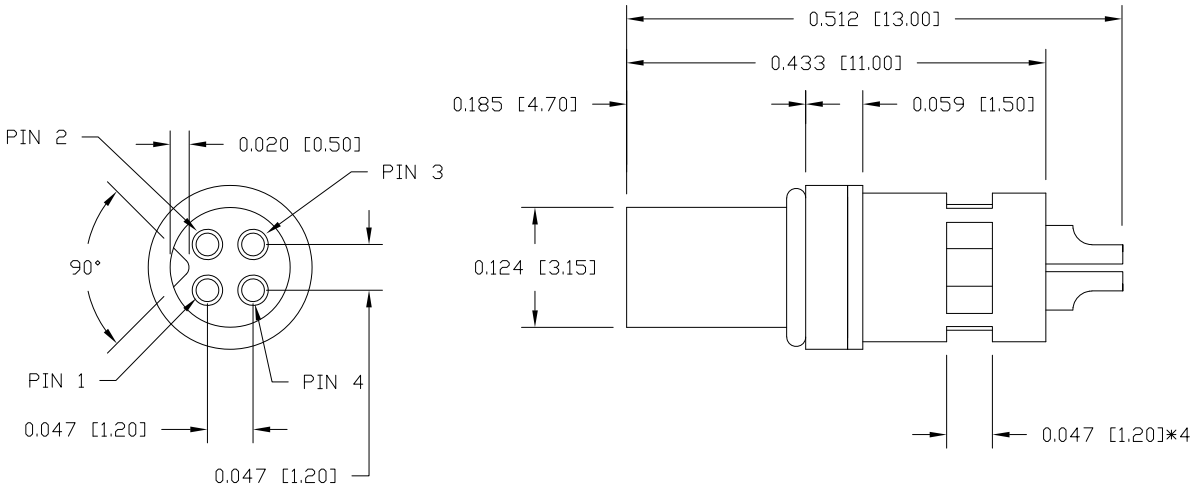

NOTE:

MATERIAL	
HOUSING:	TPU, BLACK
SHELL:	BRASS
CONTACT:	BRASS
NUT:	BRASS
O-RING:	NBR, BLACK
FINISH	
SHELL:	TIN PLATED
CONTACT:	GOLD PLATED OVER 50µ NICKEL
NUT:	NICKEL PLATED
ELECTRICAL	
RATED CURRENT:	1A
RATED VOLTAGE:	60V
INSULATION RESISTANCE:	100 MΩ MIN.
CONTACT RESISTANCE:	10 mΩ MAX.
WATER PROOF:	IP67
ENVIRONMENT	
OPERATION TEMPERATURE:	-40°C TO +85°C
WIRE GAUGE:	28 AWG MAX RECOMMENDED

850-004-203RSSY

1 = GOLD FLASH
4 = 10u" GOLD

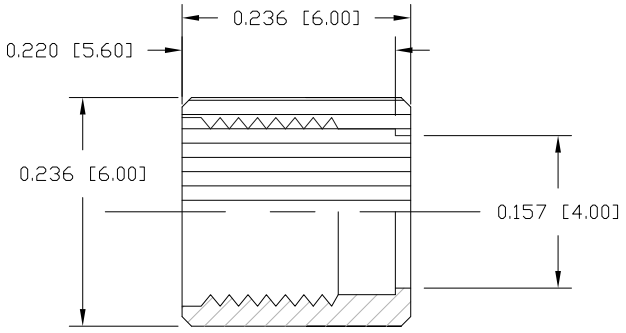

NUT

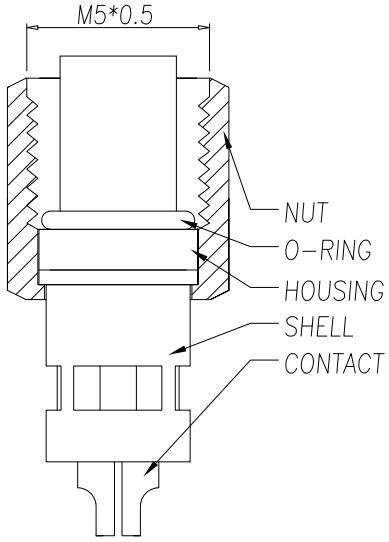

RoHS COMPLIANT

UNITS = inch [mm]

DO NOT SCALE FROM DRAWING

THESE DRAWINGS AND SPECIFICATIONS ARE THE PROPERTY OF NorComp AND SHALL NOT BE REPRODUCED, COPIED OR USED AS THE BASIS FOR THE MANUFACTURE OR SALE OF APPARATUS WITHOUT WRITTEN PERMISSION.

DRAWN:	DATE:		SCALE:	SHEET	OF	REV
M. SIGMON	03-04-16	NorComp	NTS	1	1	7

DWG NO. 850-004-203RSSY