Intel® RealSense™ ID Solution F450, F455

Datasheet

Intel® RealSense™ ID Solution F450, Intel® RealSense™ ID Solution F455

May 2021

Revision 003

You may not use or facilitate the use of this document in connection with any infringement or other legal analysis concerning Intel products described herein. You agree to grant Intel a non-exclusive, royalty-free license to any patent claim thereafter drafted which includes subject matter disclosed herein.

No license (express or implied, by estoppel or otherwise) to any intellectual property rights is granted by this document.

Intel technologies' features and benefits depend on system configuration and may require enabled hardware, software or service activation. Learn more at Intel.com, or from the OEM or retailer.

No computer system can be absolutely secure. Intel does not assume any liability for lost or stolen data or systems or any damages resulting from such losses.

The products described may contain design defects or errors known as errata which may cause the product to deviate from published specifications. Current characterized errata are available on request.

Intel disclaims all express and implied warranties, including without limitation, the implied warranties of merchantability, fitness for a particular purpose, and non-infringement, as well as any warranty arising from course of performance, course of dealing, or usage in trade.

Intel technologies' features and benefits depend on system configuration and may require enabled hardware, software or service activation. Learn more at intel.com, or from the OEM or retailer.

All information provided here is subject to change without notice. Contact your Intel representative to obtain the latest Intel product specifications and roadmaps.

Copies of documents which have an order number and are referenced in this document may be obtained by calling 1-800-548-4725 or visit www.intel.com/design/literature.htm.

By using this document, in addition to any agreements you have with Intel, you accept the terms set forth below.

Contact your local Intel sales office or your distributor to obtain the latest specifications and before placing your product order.

Intel, RealSense, and the Intel logo are trademarks of Intel Corporation in the U.S. and other countries.

*Other names and brands may be claimed as the property of others.

Copyright © 2021, Intel Corporation. All rights reserved.

Contents

1 Overview 8

2 Hardware Details 10
- 2.1 Host Interconnect 11
  - 2.1.1 Data Interface 11
  - 2.1.2 Power Interface 11
  - 2.1.3 Receptacle Pin Out 12
- 2.2 Optical System 14
  - 2.2.1 Cameras 14
  - 2.2.2 IR Illuminators 15
- 2.3 Thermal 15
  - 2.3.1 Intel® RealSense™ ID Solution F450 Thermal 15
  - 2.3.2 Intel® RealSense™ ID Solution F455 Thermal 16
  - 2.3.3 Power Profiling 17
- 2.4 Firmware Upgrade 17

3 Mechanical 18
- 3.1 Mechanical Dimensions 18
- 3.2 Cover Glass 19
- 3.3 Optical Isolation 19
- 3.4 Orientation 20
- 3.5 System Tilt 20
  - 3.5.1 Heat Sink 21

4 Software Definition 22
- 4.1 Intel® RealSense™ ID SDK for Facial Authentication 22
- 4.2 Face Authentication 22

5 System Integration 24
- 5.1 Product Assembly 24
  - 5.1.1 Optical Assembly Considerations 25
- 5.2 Trigger Heuristic 25
- 5.3 User Feedback 26

6 Regulatory Compliance 28
- 6.1 System Laser Compliance 28
  - 6.1.1 Certification Statement 28
  - 6.1.2 Explanatory Label 28
  - 6.1.3 Cautionary Statements 28
  - 6.1.4 US FDA Accession Number 29
- 6.2 Regulatory Compliance 29
  - 6.2.1 Manufacturer's Information 29
  - 6.2.2 EU Single Place of Contact 29
  - 6.2.3 UK Single Place of Contact 29
  - 6.2.4 FCC Part 15 Declaration of Conformity 30
  - 6.2.5 Canada 30
  - 6.2.6 European Directives 31
  - 6.2.7 Australia 31
  - 6.2.8 Japan 31
  - 6.2.9 South Korea 31

6.2.10 Customs Union 32
6.3 Ecology Compliance 33
6.3.1 China RoHS Declaration 33
6.3.2 Waste Electrical and Electronic Equipment (WEEE) 34
6.3.3 Turkey 34

7 Mechanical Drawings 35

8 Appendix A – Interposer Reference Designs 37

List of Figures

Figure 1-1: Intel® RealSense™ ID Solution F450 Module..... 8
Figure 1-2: Intel® RealSense™ ID Solution F450 Module System Topology..... 9
Figure 2-1: Intel® RealSense™ ID Solution F450 Module Front Side 10
Figure 2-2: Intel® RealSense™ ID Solution F450 Module Rear Side 10
Figure 2-3: Intel® RealSense™ ID Solution F450 Connector Pin 1 Location..... 14
Figure 3-1: Intel® RealSense™ ID Solution F450 Module Dimensions 18
Figure 3-2: Through Hole Design 19
Figure 3-4: Mount Orientation 20
Figure 3-5: Tilt Profile and Field of View 20
Figure 3-6: System Tilt..... 21
Figure 5-1: System Design Considerations..... 24
Figure 5-2: Trigger Heuristic 26
Figure 7-1. Intel® RealSense™ ID Solution F455..... 35
Figure 7-2. Intel® RealSense™ ID Solution F450..... 36
Figure 8-1. USB Interposer Reference Design..... 37
Figure 8-2. UART Interposer Reference Design 38

List of Tables

Table 1-1: Intel® RealSense™ ID Solution F450/F455 8
Table 2-1: Intel® RealSense™ ID Solution F450 Component List..... 10
Table 2-2: Data Interface 11
Table 2-3: Power Interface 11
Table 2-4: Power Consumption..... 11
Table 2-5: Intel® RealSense™ ID Solution F450 Module Pin Out 12
Table 2-6. Interposer Interconnect Signal Description 13
Table 2-7: Camera Parameters..... 14
Table 2-8: Lens Parameters 15
Table 2-9: IR Illuminator Parameters 15
Table 2-10: Intel® RealSense™ ID Solution F450 Temperature Specifications..... 15
Table 2-11: Temperature Component Considerations 16
Table 2-12: Intel® RealSense™ ID Solution F450 – Component Power..... 16
Table 2-13: Intel® RealSense™ ID Solution F455 Temperature Specifications..... 16
Table 2-14: Firmware Upgrade Parameter 17
Table 3-1: Intel® RealSense™ ID Solution F450 Module Dimensions..... 18
Table 3-2: Intel® RealSense™ ID Solution F455 Peripheral Dimensions 18
Table 3-3: Transmissivity Requirement..... 19
Table 3-4: Human Height 20
Table 4-1: Functional Metrics 22
Table 4-2: Face Authentication Metrics 22
Table 4-3: Performance Metrics 23
Table 5-1: Product Assembly Recommendation 24
Table 5-2: Product Design Recommendation 25
Table 5-3: User Sensing Parameters 26
Table 5-4: Result Scenario Feedback..... 27
Table 5-5: Device Status Scenario Feedback 27
Table 6-1. U.S. FDA Accession Number..... 29

Revision History

Revision	Description	Date
001	• Initial Public Release	January 2021
002	• Table 2-4: Power Consumption • Table 2-10: Intel® RealSense™ ID Solution F450 Temperature Specifications • Table 2-12: Intel® RealSense™ ID Solution F450 – Component Power • Table 2-13: Intel® RealSense™ ID Solution F455 Temperature Specifications • Table 3-1: Intel® RealSense™ ID Solution F450 Module Dimensions • Table 3-2: Intel® RealSense™ ID Solution F455 Peripheral Dimensions • Figure 3-2: Through Hole Design • Table 4-1: Functional Metrics • Table 4-2: Face Authentication Metrics • Table 4-3: Performance Metrics • Figure 7-1. Intel® RealSense™ ID Solution F455 • Figure 7-2. Intel® RealSense™ ID Solution F450	April 2021
003	• Table 1-1: Intel® RealSense™ ID Solution F450/F455 • Table 2-1: Intel® RealSense™ ID Solution F450 Component List	May 2021

§ §

1 Overview

The Intel® RealSense™ ID Solution F450 is an embedded face authentication module built upon a closed real-time operating system (RTOS) using neural network algorithms. The Intel® RealSense™ ID Solution F450 module integrates the optical components and processing hardware necessary to integrate high performance, local face authentication capabilities into new and existing product types. The Intel® RealSense™ ID Solution F455 is a peripheral device that incorporates the Intel® RealSense™ ID Solution F450 module.

Figure 1-1: Intel® RealSense™ ID Solution F450 Module

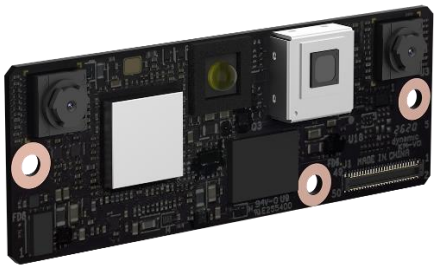

Table 1-1: Intel® RealSense™ ID Solution F450/F455

CONFIG	DESCRIPTION
Module	The Intel® RealSense™ ID Solution F450 is an embedded device. An SOC controls all boot-up and runtime flows of the Intel® RealSense™ ID Solution F450 module through an internal data link connection.
Peripheral	The Intel® RealSense™ ID Solution F450 integrated into a mechanical housing. The Intel® RealSense™ ID Solution F455 connects to an external system through an external cable, typically USB2.

Figure 1-2: Intel® RealSense™ ID Solution F450 Module System Topology

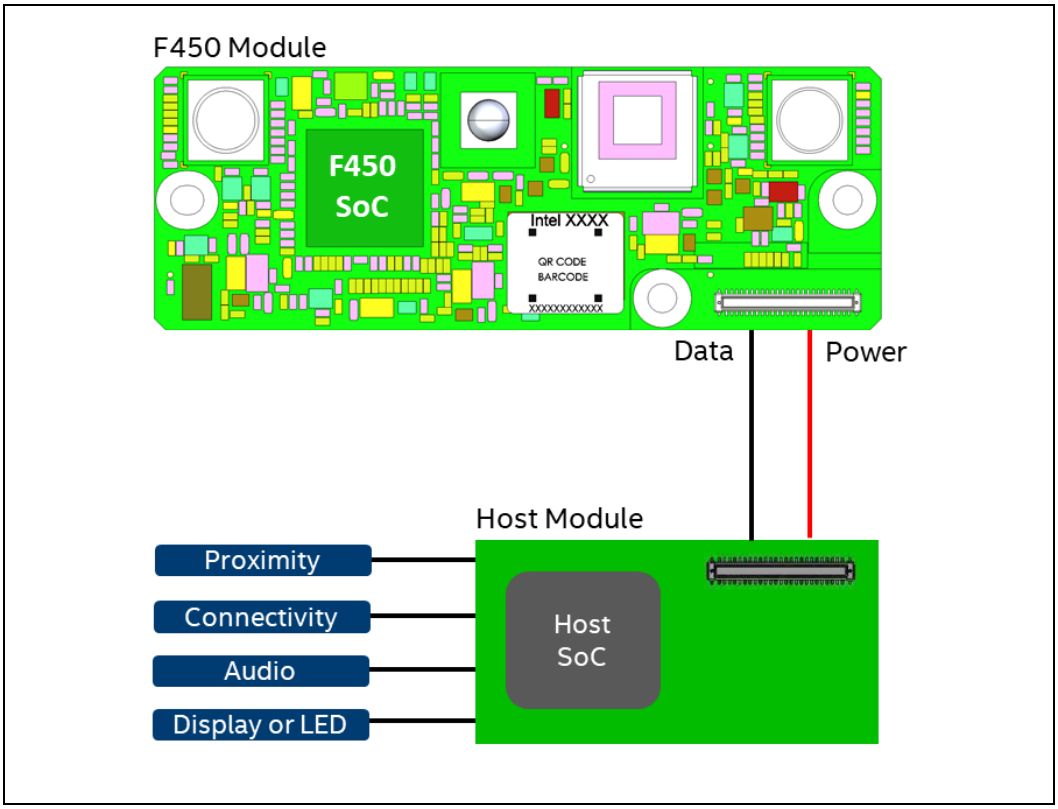

2 Hardware Details

The Intel® RealSense™ ID Solution F450 module is a single optical PCB subassembly with processing capabilities that the product will mount into a system chassis and connect to a host. The optical components consist of both image sensors and illumination components.

Figure 2-1: Intel® RealSense™ ID Solution F450 Module Front Side

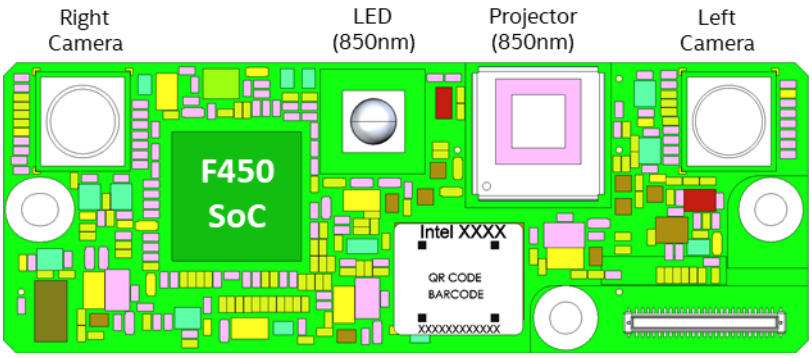

Table 2-1: Intel® RealSense™ ID Solution F450 Component List

SECTION	DESCRIPTION
SOC	System on Chip
Right Camera	Full HD Camera
Left Camera	Full HD Camera
Projector	850nm IR
LED	850nm IR
Host Connector	IPEX 20708-050E Plug (50pin)
Crystal	24MHz
Flash	512Mb Storage

Figure 2-2: Intel® RealSense™ ID Solution F450 Module Rear Side

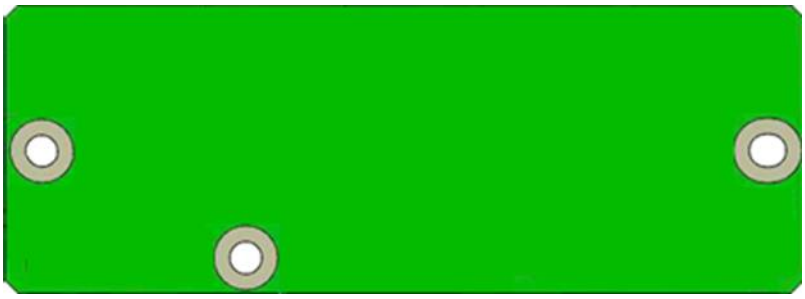

2.1 Host Interconnect

The Intel® RealSense™ ID Solution F450 module requires external power and a serial data link for initialization and control of the Face Authentication system. Data signals and external power are both routed through the same host connector interface.

2.1.1 Data Interface

The Intel® RealSense™ ID Solution F450 supports both UART and USB2 interfaces for the data link.

Table 2-2: Data Interface

SECTION	DATA RATE	PINS
UART (3V Interface)	115.2kbs to 4Mbps	UART_TX (Pin 47), UART_RX (Pin 49)
USB2	480Mbs	USB2_DP (Pin 46), USB2_DN (Pin 48)

2.1.2 Power Interface

The Intel® RealSense™ ID Solution F450 module has a peak power of up to 3.6W. The host system must ensure the power supply can satisfy this peak power based on the chosen Intel® RealSense™ ID Solution F450 voltage source (VDD). If the host system supports power gate control it is the responsibility of the host system to ensure no conflicts between power sequencing and data link initialization occurs during power-up and power-down cycles.

Table 2-3: Power Interface

PIN	VOLTAGE RANGE	PEAK POWER
VDD (Pin 51/52)	3.15 to 5.0V	2.1 – 3.6W(1)(2)
GND	-	-

NOTES:
(1) The power range is primarily dependent on illumination power set by the device.
(2) The typical max current for a USB2 port is 450mA, USB3 port is 900mA.

The Intel® RealSense™ ID Solution F450 supports three device states, off, standby, and operation. In the off state the Intel® RealSense™ ID Solution F450 is shutdown and the power supply from the host is disabled. In the standby, the Intel® RealSense™ ID Solution F450 power supply is enabled, the SOC is in an execution loop for manageability access or FW update, but the optical components are powered down. In the operation state, the power supply is enabled, SOC is running FA enrollment or authentication usage with the optical components activated.

Table 2-4: Power Consumption

SECTION	POWER CONSUMPTION	UNITS
Off	0	mW

Operation	1.3 – 1.5	W

2.1.3 Receptacle Pin Out

The connector plug part number is IPEX 20708-050E. The required host cable plug for connecting the Intel® RealSense™ ID Solution F450 module must use IPEX 20709-050E receptacle.

Table 2-5: Intel® RealSense™ ID Solution F450 Module Pin Out

PIN	SIGNAL	PIN	SIGNAL
2	GND	1	CPU_RXD
4	AUDGPIO_2	3	CPU_TXD
6	AUDGPIO_1	5	GND
8	GND	7	-
10	CSI_DN1	9	I2C_SDA18
12	CSI_DP1	11	I2C_SCL18
14	GND	13	HOST_ADC_In
16	AUDGPIO_0	15	EXT_RSTn (Active Low)
18	-	17	GPO_1
20	GND	19	GPO_0
22	GPIO_6	21	GND
24	GPIO_5	23	-
26	GND	25	SDO1
28	GPIO_3	27	SCK1
30	GPIO_2	29	SDI1
32	GND	31	SEN1
34	CSI_CKN	33	GPO_4
36	CSI_CKP	35	GND
38	GND	37	CSI_VSD0
40	CSI_DN0	39	SCL_3
42	CSI_DP0	41	SDA_3
44	GND	43	PWM4
46	USB_DP	45	PWM3
48	USB_DM	47	CPU_TXD2
50	GND	49	CPU_RXD2
52	5V (Connector Pin)	51	5V (Connector Pin)
54	GND (Connector Pin)	53	GND (Connector Pin)

Table 2-6. Interposer Interconnect Signal Description

Position	Signal	Intel® RealSense™ ID Solution F450 In/Out	Interconnect Description
1	CPU_RXD	Input	3V Debug UART RxD or USB AUX_IN
2	GND		Ground
3	CPU_TXD	Output	3V Debug UART TxD or USB AUX_OUT
5	GND		Ground
8	GND		Ground
14	GND		Ground
15	EXT_RSTn	Input	External Reset, Open/GND discrete, of Intel® RealSense™ ID Solution F450 module (should be connected to open drain I/O).
20	GND		Ground
21	GND		Ground
22	GPIO_6	Input/Output	3V General Purpose I/O, defined by FW (No external PU/PD needed).
26	GND		
32	GND		
33	GPO_4	Output	GPIO Output (No external PU/PD needed).
35	GND		Ground
38	GND		Ground
44	GND		
46	USB2+		USB 2 differential pair positive
47	CPU_TxD2	Output	3V UART TxD (Output from the Intel® RealSense™ ID Solution F450 Module)
48	USB2-		USB 2 differential pair negative
49	CPU_RxD2	Input	3V UART RxD (Input into the Intel® RealSense™ ID Solution F450 Module)
50	GND		Ground
51	Vin	Power IN	F450 Power IN – 3.15V – 5.5V (Peak power consumption = 3.65W) Typical = 3.6V Maximum = 5.5V Minimum = 3.15V
52	Vin	Power IN	Intel® RealSense™ ID Solution F450 Power IN – 3.15V – 5.5V

Position	Signal	Intel® RealSense™ ID Solution F450 In/Out	Interconnect Description
			(Peak power consumption = 3.65W) Typical = 3.6V Maximum = 5.5V Minimum = 3.15V
53	GND	Ground IN	Ground
54	GND	Ground IN	Ground

Figure 2-3: Intel® RealSense™ ID Solution F450 Connector Pin 1 Location

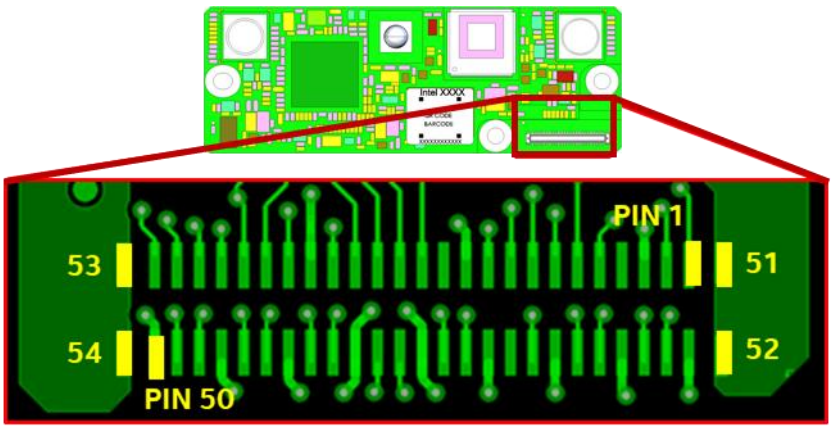

2.2 Optical System

2.2.1 Cameras

The optical system consists of two synced semi-mechanically aligned cameras which capture images from different perspectives for the purpose of 3D triangulation to create disparity. The Intel® RealSense™ ID Solution F450 utilizes the cameras for face authentication. The right camera can provide 1080P RGB.

Note: Although face authentication utilizes RAW format from the sensor, only the processed RGB video stream can be transmitted externally to the host.

Table 2-7: Camera Parameters

DIMENSION	CAMERA 1	CAMERA 2
Position (Camera Perspective)	Left	Right

Orientation	Portrait	Portrait
RGB Support	Yes	No

Table 2-8: Lens Parameters

DIMENSION	MIN
Field of View (Mono)	HFOV = 59°, VFOV = 80°, DFOV = 91°

2.2.2 IR Illuminators

The optical system consists of an IR LED for face illumination in low or non-uniform lighting conditions and an IR dot projector for 3D triangulation to create disparity. The illumination angle and placement of these components is chosen based on the field of view for both cameras.

The IR illuminators are both tested to the eye safety industry standards as defined by the IEC.

Table 2-9: IR Illuminator Parameters

DIMENSION	DOT PROJECTOR	LED
Orientation	Portrait	Portrait
Wavelength	850nm	850nm
Regulatory	Class 1 (IEC-60825-1 ED3)	RG0 (IEC-62471)

2.3 Thermal

2.3.1 Intel® RealSense™ ID Solution F450 Thermal

The Intel® RealSense™ ID Solution F450 module is designed to work indoors and outdoors across a wide temperature range.

Table 2-10: Intel® RealSense™ ID Solution F450 Temperature Specifications

DIMENSION	MIN	NOM	MAX	UNIT
Storage Temperature (Ambient), Not Powered	-30	-	+70	°C
Case (Backside PCB) Temperature, Powered(1)(2)(3)	0	-	+60	°C

NOTES:

1. All temperatures are calculated under the assumption of 100% duty-cycle of the device
2. Specification is based on preliminary assessment and will continue quality and reliability to finalize in later datasheet versions.
3. Powered temperature is average across backside PCB.

The optical properties of the camera and projector components can change based on the temperature of the component. This can range to a decrease in camera quality or decrease in the illumination power. Either of these can have an impact on face authentication performance, including the user being required to stand closer to the Intel® RealSense™ ID Solution F450 module.

Table 2-11: Temperature Component Considerations

COMPONENT	PARAMETER	DESCRIPTION
Projector	Optical Power	The distance in which can be detected by the camera.
	Field of View	The area in which covers the camera FOV.
	Wavelength	Aligned to sensitivity of the camera IR channel.
Camera	Field of View	The area in which covers the camera FOV.
	MTF	Sharpness of fuzziness of the camera FOV.
	Sensitivity	Detection of user wavelengths across the FA spectrum.
	SNR	Signal quality of the input data into the FA algorithms.
	Lag	Time delta in which photons are measured by the camera.

Table 2-12: Intel® RealSense™ ID Solution F450 – Component Power

Component	Power	Unit
Left Imager	90	mW
Right Imager	90	mW
Projector	61	mW
SOC + Flash	703	mW
LED	356	mW

2.3.2 Intel® RealSense™ ID Solution F455 Thermal

Table 2-13: Intel® RealSense™ ID Solution F455 Temperature Specifications

DIMENSION	MIN	NOM	MAX	UNIT
Storage Temperature (Ambient), Not Powered	-30	-	+70	°C
Backside Case Temperature, Powered(1)(2)(3)	0	-	+55	°C

NOTES:

1. All temperatures are calculated under the assumption of 100% duty-cycle of the device
2. Specification is based on preliminary assessment and will continue quality and reliability to finalize in later datasheet versions.
3. Powered temperature is average across backside case.

2.3.3 Power Profiling

To minimize thermal dissipation design requirements for integrating the module into a system, it is recommended to maintain a 1.5s cycle mode of work. Face authentication is designed to work within this time span, but if the module is operating continuously this will cause heating which may not be dissipated by design.

2.4 Firmware Upgrade

The Intel® RealSense™ ID Solution F450 implements 512Mb of local storage which will contain the OS and face authentication runtime. Intel will provide a FW image which is used for initial provisioning of the Intel® RealSense™ ID Solution F450. The FW image contains a local flash update runtime which allows the host to push new FW payloads to update the Intel® RealSense™ ID Solution F450 device.

Table 2-14: Firmware Upgrade Parameter

PARAMETER	SUPPORT	DESCRIPTION
FW Public Key	Yes	Stored on the Intel® RealSense™ ID Solution F450 device.
Signed FW	Yes	Update tool will compare signature before update.
Rollback Protection	No	Host system checks version before initiating an update.
Local Update	No	Host system must push payload.
Update Tool	Yes	Local Storage via Intel Tool
Host Interface	Yes	USB and UART

3 Mechanical

The small form factor of the Intel® RealSense™ ID Solution F450 module enables integration flexibility. The host system will mount and tilt the Intel® RealSense™ ID Solution F450 module based on the system installation height specification, user height range, and user approach paths to the device. The placement and orientation of the system design will depend on the following factors.

1. Sensor and lens field of view.
2. User height range and approach path.
3. Detection range of the face authentication system.

3.1 Mechanical Dimensions

Table 3-1: Intel® RealSense™ ID Solution F450 Module Dimensions

DIMENSION	MIN	NOM	MAX	TOLERANCE	UNIT
X	49.70	49.80	49.90	± 0.10	mm
Y	17.90	18	18.10	± 0.10	mm
Z	4.23	4.38	4.53	± 0.15	mm

Figure 3-1: Intel® RealSense™ ID Solution F450 Module Dimensions

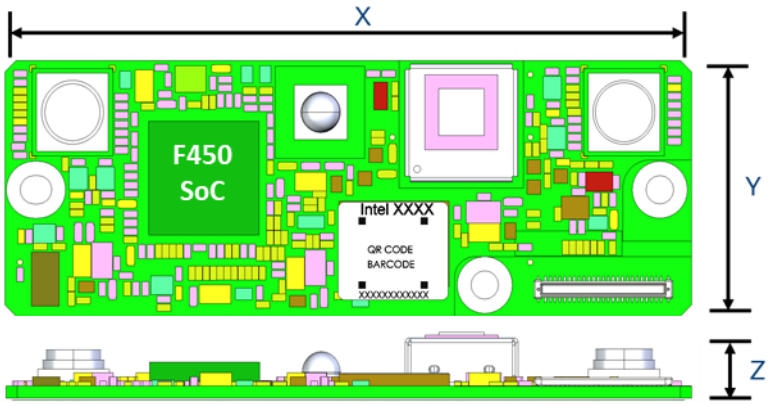

Table 3-2: Intel® RealSense™ ID Solution F455 Peripheral Dimensions

DIMENSION	MIN	NOM	MAX	TOLERANCE	UNIT
X	61.90	62	62.10	± 0.10	mm
Y	32.40	32.50	32.60	± 0.10	mm
Z	10.85	11	11.15	± 0.15	mm

3.2 Cover Glass

The Intel® RealSense™ ID Solution F450 module components must be covered to minimize impact of dust and humidity. The transparent cover glass material stack-up must provide acceptable transmission based on the component wavelengths. The through hole sizes of the cover glass is dependent on the optical component field of view or field of illumination as well as the cone diameter from the optical component to the cover glass.

A 3D CAD assessment should be completed to ensure no collision between the cone part of each optical component and the cover glass opening.

Table 3-3: Transmissivity Requirement

THROUGH HOLE	TRANSMISSIVITY
1, 2, 3 and 4	>98% @ 400nm to 880nm

Figure 3-2: Through Hole Design

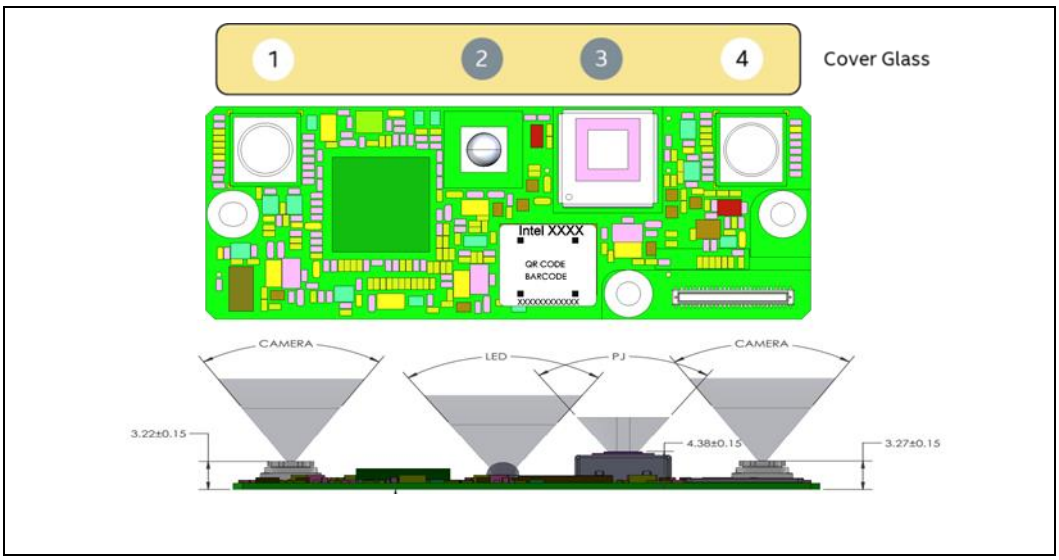

3.3 Optical Isolation

It is recommended to isolate the cameras from the illumination components to prevent reflections off the cover material. Not properly isolating the cameras can result in leakage light from the illumination components. It is recommended to use a gasket material in between the cover glass and the Intel® RealSense™ ID Solution F450 module. The gasket material needs to be compliant so that it does not transmit chassis flex forces to the module.

3.4 Orientation

The module can be assembled in either 0º or 180º landscape rotation. The module cannot be assembled in a 90º or 270º portrait orientation.

Figure 3-3: Mount Orientation

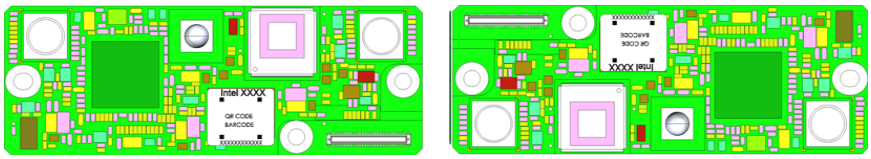

3.5 System Tilt

Given the field of view of the cameras and illumination components, assembling the Intel® RealSense™ ID Solution F450 module parallel to a typical mounting surface may not cover the intended user height range for the product requirement. To mitigate, the Intel® RealSense™ ID Solution F450 module can be assembled at an angle to adjust the min and max user height for face authentication.

Table 3-4: Human Height

DIMENSION	MIN	NOM	MAX	UNIT
Vertical Range @ 55cm	120	-	190	cm
System Tilt	11	16	21	deg
Height Placement(1)	1.1	1.2	1.25	m

NOTES:
(1) The height placement is with respect to the sensor center line position.

Figure 3-4: Tilt Profile and Field of View

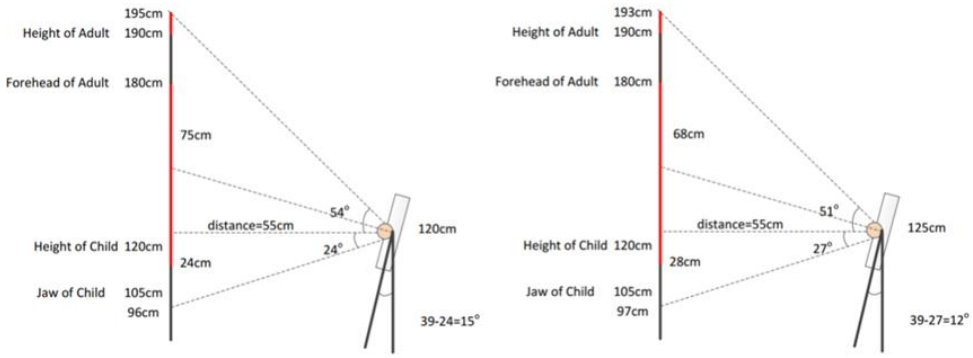

Figure 3-5: System Tilt

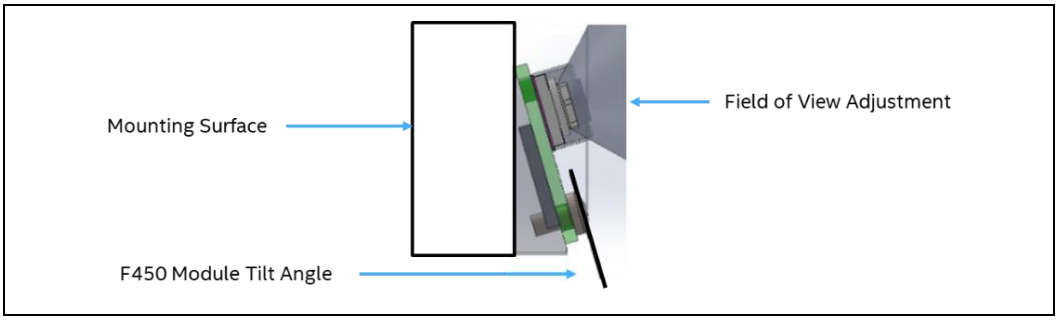

3.5.1 Heat Sink

Although the peak power is up to 3W, the Intel® RealSense™ ID Solution F450 module is only expected to dissipate a total of 1.3W while the optical system is activated during face authentication. This assumes a 30% duty cycle while the illumination components are active.

If needed the system design will need to include a heat sink to maintain proper operating temperatures for the Intel® RealSense™ ID Solution F450 components. Unless multiple retries are required, a typical face authentication session can continue for up to 2s.

4 Software Definition

The Intel® RealSense™ ID Solution F450 module executes in a closed system running a real time operating system. The face authentication uses image pre-processing, anti-spoofing checking, and the SOC matrix acceleration engine embedded to extract the face features of the user. These face features are then stored during enrollment of a new user or compared during authentication to determine whether the user is valid.

4.1 Intel® RealSense™ ID SDK for Facial Authentication

The Intel® RealSense™ ID SDK for Facial Authentication is a library providing Facial Authentication capabilities to applications using the Intel® RealSense™ ID Solution F450 or F455. It is open source and available on https://github.com/IntelRealSense/RealSenseID

4.2 Face Authentication

The Intel® RealSense™ ID Solution F450 optical system and the face authentication algorithms are optimized for functional and performance profiles targeted at access control devices. In this use case, one or more users will walk up to the device in the runtime or standby state, the host will notify the Intel® RealSense™ ID Solution F450 module to perform face authentication and the Intel® RealSense™ ID Solution F450 module will respond back the result. The host can then decide how to feedback status and result back to the end user.

Table 4-1: Functional Metrics

METRIC	VALUE	METRIC
Number of Users	1000	Users
Authentication Range	30 to 100	cm
Anti-Spoofing Range	30 to 100	cm
Ambient Light	0 to 50k*	lux
(*) Reduced performance may be exhibited in semi-shade or direct sunlight.		

Table 4-2: Face Authentication Metrics

METRIC	DESCRIPTION	VALUE
False Acceptance Rate (FAR)	Recognize someone else as you.	1:1M
True Acceptance Rate (TAR)	Recognize you as you.	99.76%
Spoof Acceptance Rate (SAR)	Recognizes a recorded sample of you as you (photo or model).	<0.1%

Table 4-3: Performance Metrics

METRIC	DESCRIPTION	VALUE
Cold Latency	Cold Power Up to Face Authentication Result	<3s
Warm Latency	Wake Up to Face Authentication Result	<1.5s
FA Flow	Time to Complete Face Authentication	<0.8s

5 System Integration

The system design and topology will be owned by the host system OEM with the Intel® RealSense™ ID Solution F450 module as a subassembly component. There are product assembly recommendations that Intel provides to ensure proper function of the Intel® RealSense™ ID Solution F450 module, but design parameters such as user sensing and user feedback will be defined by the OEM.

Figure 5-1: System Design Considerations

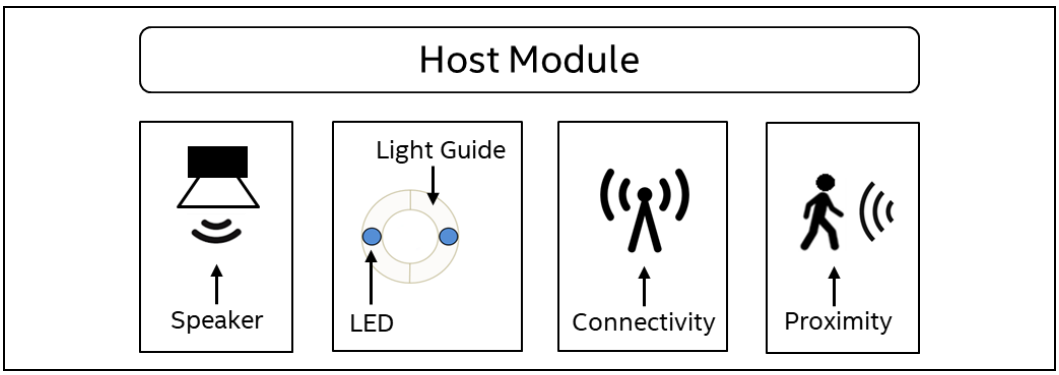

5.1 Product Assembly

The Intel® RealSense™ ID Solution F450 module is intended to be assembled into the system in a horizontal or landscape orientation. The Intel® RealSense™ ID Solution F450 module should be secured to ensure the camera and illumination extrinsic specifications are not exceeded for post assembly and throughout the thermal operating range of the product.

Table 5-1: Product Assembly Recommendation

NAME	DIMENSION	UNIT
YAW (Camera to Camera)	1	deg
PITCH (Camera to Camera)	1	deg
ROLL (Camera to Camera)	1	deg
YAW (Camera to Illumination)	1	deg
PITCH (Camera to Illumination)	1	deg
ROLL (Camera to Illumination)	1	deg

The product design and assembly recommendations for the Intel® RealSense™ ID Solution F450 module are dependent on optimizing the optical performance by minimizing moisture and dust impacts.

Table 5-2: Product Design Recommendation

NAME	DESCRIPTION
Ingress Protection	The system integrator will define ingress protection level based on the installation location of the product (e.g. indoor/outdoor). The Intel® RealSense™ ID Solution F450 optical elements should be protected from dust and moisture accumulation.
Anti-Fog Coating	If this is a design consideration based on the installation location of the product, a coating should be applied to the glass to prevent fogging from occurring. Initial testing has shown that a standard glass coating (e.g. DuPont de-icing spray) proved insufficient
Enclosure	Based on installation location of the product (e.g. indoor/outdoor), recommend designing metal enclosure and not use plastic materials that might allow humidity to pass through.
Purging	Guarantee below 5% humidity during assembly.
Pressurizing*	0.5psig with N2 (nitrogen) so no humidity will be able to enter the system.
Desiccant*	Replaceable bag/capsule - Molecular Sieve (ZEOLITE) or Activated Alumina.
* Might not be required due to the small dimensions of the enclosure, but nice to have to provide best protection against humidity.	

5.1.1 Optical Assembly Considerations

The Intel® RealSense™ ID Solution F450 module will be shipped with an easily removable protective film on the camera and illumination components. This must be removed before assembly as the Intel® RealSense™ ID Solution F450 module will not function with this film installed. It is recommended that the cover glass has similar film protection to minimize dust and fingerprints.

To ensure dust and particles are minimized on the lens and cover glass during assembly it is recommended that the assembly room maintain a clean room metric of greater than 10,000 PPM. If an operator must manually handle the components, then gloves and mask is recommended. The following steps should then be followed to during assembly and performance validation.

1. Remove the protective film on the Intel® RealSense™ ID Solution F450 module optical components.
2. Remove the protective film on the cover glass.
3. Remove the liner on the cover glass edge that protects the glue.
4. Assemble the Intel® RealSense™ ID Solution F450 module and the cover glass.
5. Validate the device.
6. Clean the cover glass, then add protective film.

5.2 Trigger Heuristic

The Intel® RealSense™ ID Solution F450 module does not include a system for sensing user approach, but does support power management for runtime, standby,

and wake. To improve the power efficiency of the Intel® RealSense™ ID Solution F450 system, it is recommended that the host system implement either motion or proximity sensing capabilities to determine when to wake and start a Face Authentication session. The host system would receive an interrupt from the user approach sensors and then propagate that request to the Intel® RealSense™ ID Solution F450 module interface which will cause a wake event.

Table 5-3: User Sensing Parameters

DESIGN PARAMETERS
Horizontal Field of View and Zone Sectioning
Vertical Field of View and Zone Sectioning
User Path (Walk-Up versus Walk-By)
Sensitivity Threshold Granularity and Control
Sensing Distance

Figure 5-2: Trigger Heuristic

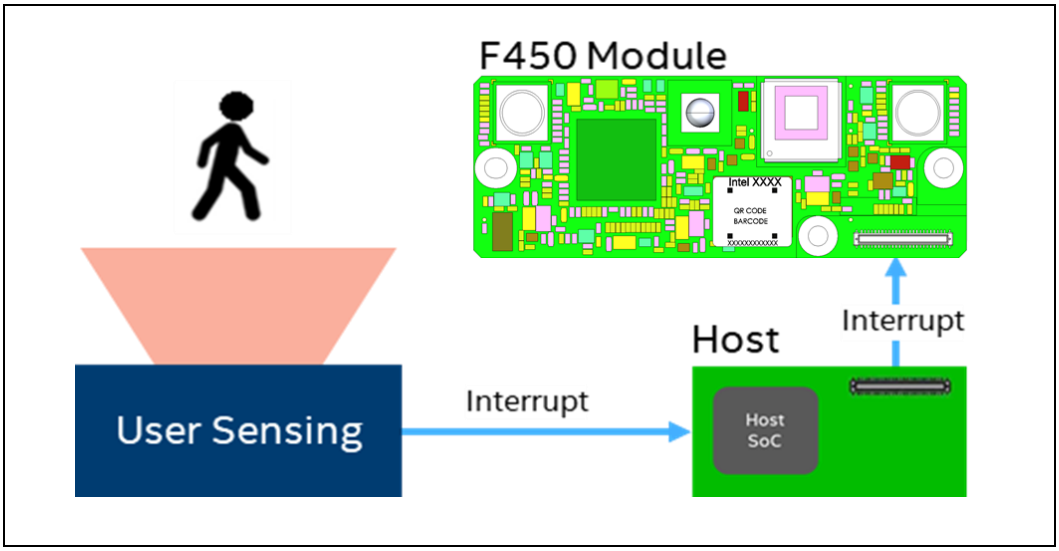

5.3 User Feedback

If the system design requires both audio and visual feedback the host will need to interface to both speaker and/or display/LED components. This will provide the necessary user feedback during enrollment and authentication scenarios. It is up to the host system to define each audio and visual prompt.

As the enrollment and authentication flows are initiated by the host system, the Intel® RealSense™ ID Solution F450 module can return status codes. It is up to the host system to translate those codes into respective audio or visual feedback which can cause the user to perform certain actions.

Table 5-4: Result Scenario Feedback

SCENARIO	AUDIO	VISUAL
Authentication Success	"Welcome"	GREEN (Blink)
Authentication Failed	"Authentication Failed"	RED (Blink)
Enrollment Success	"Enroll Success"	GREEN (Blink)

Table 5-5: Device Status Scenario Feedback

SCENARIO	AUDIO	VISUAL
No Face Detected	"Not Detected"	YELLOW (BLINK)
Face is Too Far Top	"Lower Head"	YELLOW (BLINK)
Face is Too Far Bottom	"Raise Head"	YELLOW (BLINK)
Face is Too Far Right	"Move Left"	YELLOW (BLINK)
Face is Too Far Left	"Move Right"	YELLOW (BLINK)
Face Tilt is Too Up	"Tilt Head Down"	YELLOW (BLINK)
Face Tilt is Too Down	"Tilt Head Up"	YELLOW (BLINK)
Face Tilt is Too Right	"Tilt Head Left"	YELLOW (BLINK)
Face Tilt is Too Left	"Tilt Head Right"	YELLOW (BLINK)
Face is Not Frontal	"Face Front"	YELLOW (BLINK)
Face is too Far from Camera	"Move Forward"	YELLOW (BLINK)
Face is too Close to the Camera	"Move Backward"	YELLOW (BLINK)
Multiple Faces Detected	"Too Man Faces"	YELLOW (BLINK)
Device Error	"Error"	RED (SOLID)

6 Regulatory Compliance

6.1 System Laser Compliance

The Intel® RealSense™ ID Solution series certification is transferable to the system and no system recertification is required. However, the following statements and labels must be included in the user manual of the end product

6.1.1 Certification Statement

This product is classified as a Class 1 Laser Product under the EN/IEC 60825-1, Edition 3 (2014) internationally.

This product complies with FDA performance standards for laser products except for conformance with IEC 60825-1 Ed. 3 as described in Laser Notice No. 56, dated May 8, 2019.

6.1.2 Explanatory Label

This device complies with FDA performance standards for laser products except for conformance with IEC 60825-1 Ed. 3., as described in Laser Notice No. 56, dated May 8, 2019.

6.1.3 Cautionary Statements

System integrators should refer to their respective regulatory and compliance owner to finalize regulatory requirements for a specific geography.

Caution - Use of controls or adjustments or performance of procedures other than those specified herein may result in hazardous radiation exposure.

- Do not power on the product if any external damage was observed.
- Do not attempt to open any portion of this laser product. There are no user serviceable parts.
- Invisible laser radiation when opened. Avoid direct exposure to beam.
- There are no service/maintenance, modification, or disassembly procedures for the stereo module and infrared projector. The system integrator must either notify Intel or return modules before any failure analysis is performed.
- Modification or service of the hardware, specifically the infrared projector, may cause the emissions to exceed Class 1.
- Do not try to update Intel RealSense ID Solution F455 firmware that is not officially released for Intel RealSense ID Solution F455 SKU and revision.

6.1.4 US FDA Accession Number

Table 6-1. U.S. FDA Accession Number

Component	U.S. FDA accession numbers
Intel® RealSense™ ID Solution F455/F450	2010525

This accession number should be entered into Box B.1 of the Food and Drug Administration (FDA) 2877 Declaration for Imported Electronic Products Subject to Radiation Control Standards.

6.2 Regulatory Compliance

6.2.1 Manufacturer's Information

Intel Corporation:
Attn: Corp. Quality
2200 Mission College Blvd,
Santa Clara, CA 95054-1549, USA

6.2.2 EU Single Place of Contact

Att. Corp Quality
Intel Deutschland GmbH
Am Campeon 10-12
Neubiberg, 85579 – Germany

6.2.3 UK Single Place of Contact

Intel Corporation (UK) Ltd.

Attn: Corp Quality
Pipers Way, Swindon
Wiltshire SN3 1RJ, UK

6.2.4 FCC Part 15 Declaration of Conformity

Intel® RealSense™ ID Solution F455

This device complies with part 15 of the FCC Rules. Operation is subject to the following two conditions: (1) This device may not cause harmful interference, and (2) this device must accept any interference received, including interference that may cause undesired operation.

Intel Corporation: Attn: Corp. Quality, 2200Mission College Blvd, Santa Clara, CA 95054-1549, USA

This equipment has been tested and found to comply with the limits for a Class B digital device, pursuant to part 15 of the FCC Rules. These limits are designed to provide reasonable protection against harmful interference in a residential installation. This equipment generates, uses and can radiate radio frequency energy and, if not installed and used in accordance with the instructions, may cause harmful interference to radio communications. However, there is no guarantee that interference will not occur in a particular installation. If this equipment does cause harmful interference to radio or television reception, which can be determined by turning the equipment off and on, the user is encouraged to try to correct the interference by one or more of the following measures:

- Reorient or relocate the receiving antenna.
- Increase the separation between the equipment and receiver.
- Connect the equipment into an outlet on a circuit different from that to which the receiver is connected.
- Consult the dealer or an experienced radio/TV technician for help.

Changes or modifications not expressly approved by the manufacturer could void the user's authority to operate the equipment.

CAUTION: To comply with the limits of the Class B digital device, pursuant to Part 15 of the FCC Rules, this device must be installed with computer equipment certified to comply with Class B limits. All cables used to connect to the computer and peripherals must be shielded and grounded. Operation with non-certified computers or non-shielded cables may result in interference to radio or television reception.

6.2.5 Canada

CAN ICES-3 (B)/NMB-3(B)

This digital apparatus does not exceed the Class B limits for radio noise emissions from digital apparatus set out in the Interference-Causing Equipment Standard ICES-003.

Le présent appareil numerique német pas de bruits radio électriques dépassant les limites applicables aux appareils numériques de la classe B prescrites dans la présente norme sur le matériel brouilleur, NMB-003.

6.2.6 European Directives

This product complies with all applicable European directives.

CAUTION: To keep the product in compliance with the European CE requirement, the device must be installed with CE certified computer equipment which meets the Class B limits. Operation with non-certified computers or incorrect cables may result in interference to other devices or undesired effect to the product.

6.2.7 Australia

Due to the very small size of the product, the marking has been placed in this datasheet.

6.2.8 Japan

この装置は、クラスＢ機器です。この装置は、住宅環境で使用することを目的としていますが、この装置がラジオやテレビジョン受信機に近接して使用されると、受信障害を引き起こすことがあります。 取扱説明書に従って正しい取り扱いをして下さい。　　ＶＣＣＩ－Ｂ

This device is a Class B information technology device. This device is intended for use in a home environment, but if this device is used close to a radio or television receiver it may cause reception interference. Please handle according to the instruction manual correctly. VCCI-B

6.2.9 South Korea

인증 번호: R-R-CPU-F455C
제조자: Intel Corporation
상품명: Intel® RealSense™ ID Solution
모델: F455
제조국: 태국

인증 번호: R-R-CPU-F450
제조자: Intel Corporation
상품명: Intel® RealSense™ ID Solution
모델: F450
제조국: 중국

6.2.10 Customs Union

Наименование продукции: Intel® RealSense™ ID Solution
Модель: F455
Производитель: Intel Corporation
Сделано в Таиланде

6.3 Ecology Compliance

6.3.1 China RoHS Declaration

intel

China RoHS Declaration

产品中有毒有害物质的名称及含量
Hazardous Substances Table

部件名称 Component Name	有毒有害物质或元素 Hazardous Substance					
	铅 Pb	汞 Hg	镉 Cd	六价铬 Cr (VI)	多溴联苯 PBB	多溴二苯醚 PBDE
解决方案 Solution	X	○	○	○	○	○
印刷电路板组**件** Printed Board Assemblies	X	○	○	○	○	○
三角架 Tripod	○	○	○	○	○	○
电缆 Cable	○	○	○	○	○	○

○：表示该有毒有害物质在该部件所有均质材料中的含量均在GB/T 26572标准规定的限量要求以下。

○：Indicates that this hazardous substance contained in all homogeneous materials of such component is within the limits specified in GB/T 26572.

×：表示该有毒有害物质至少在该部件的某一均质材料中的含量超出GB/T 26572标准规定的限量要求。

×： Indicates that the content of such hazardous substance in at least a homogeneous material of such component exceeds the limits specified in GB/T 26572.

对销售之日的所售产品,本表显示我公司供应链的电子信息产品可能包含这些物质。注意：在所售产品中可能会也可能不会含有所有所列的部件。

This table shows where these substances may be found in the supply chain of our electronic information products, as of the date of sale of the enclosed product. Note that some of the component types listed above may or may not be a part of the enclosed product.

除非另外特别的标注,此标志为针对所涉及产品的环保使用期限标志. 某些可更换的零部件可能会有一个不同的环保使用期限(例如,电池单元模块).
此环保使用期限只适用于产品在产品手册中所规定的条件下工作.

The Environment-Friendly Use Period (EFUP) for all enclosed products and their parts are per the symbol shown here, unless otherwise marked. Certain field-replaceable parts may have a different EFUP (for example, battery modules) number. The Environment-Friendly Use Period is valid only when the product is operated under the conditions defined in the product manual.

6.3.2 Waste Electrical and Electronic Equipment (WEEE)

"In the EU, this symbol means that this product must not be disposed of with household waste. It is your responsibility to bring it to a designated collection point for the recycling of waste electrical and electronic equipment. For more information, contact the local waste collection center or your point of purchase of this product."

6.3.3 Turkey

Türkiye Cumhuriyeti: EEE Yönetmeliğine Uygundur

§ §

7 Mechanical Drawings

Figure 7-1. Intel® RealSense™ ID Solution F455

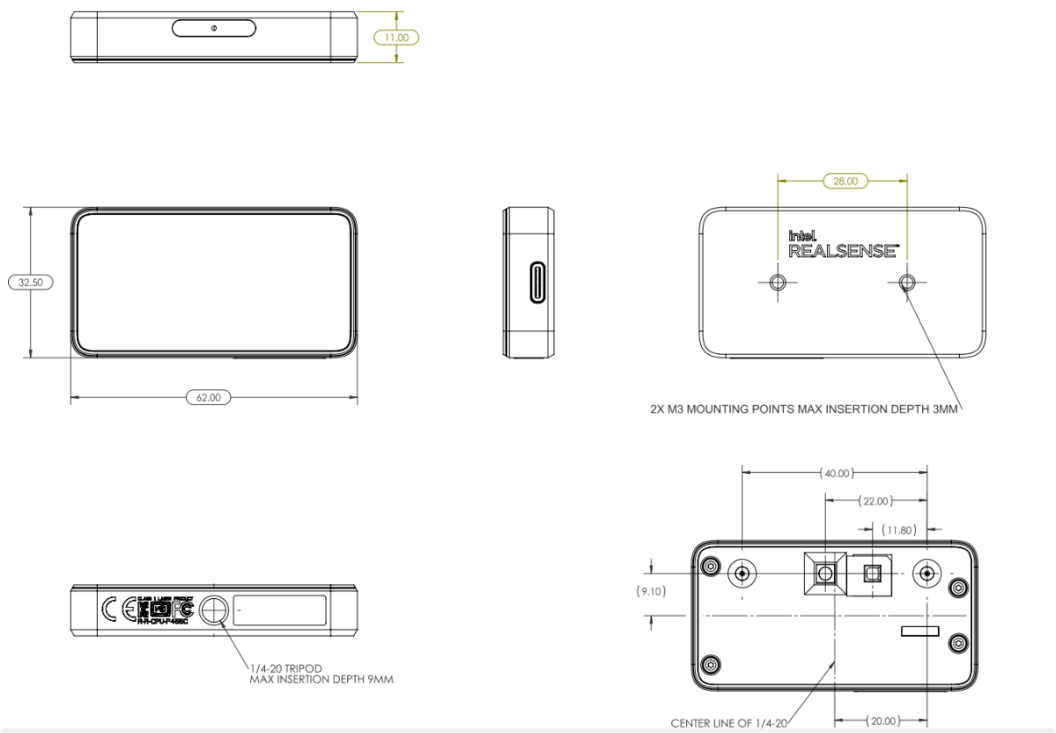

Note: Camera masking lens removed for clarity

Figure 7-2. Intel® RealSense™ ID Solution F450

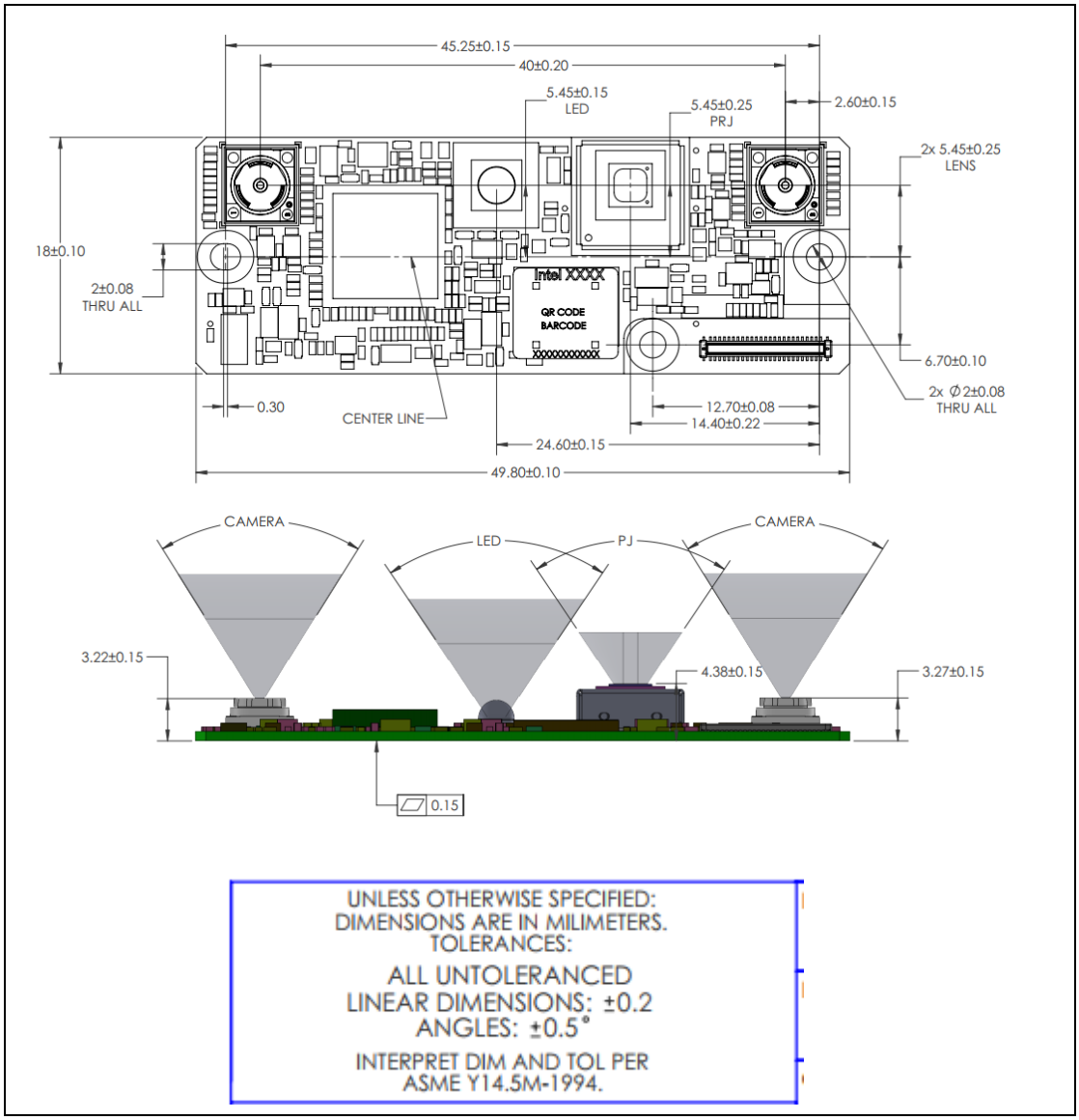

8 Appendix A – Interposer Reference Designs

Figure 8-1. USB Interposer Reference Design

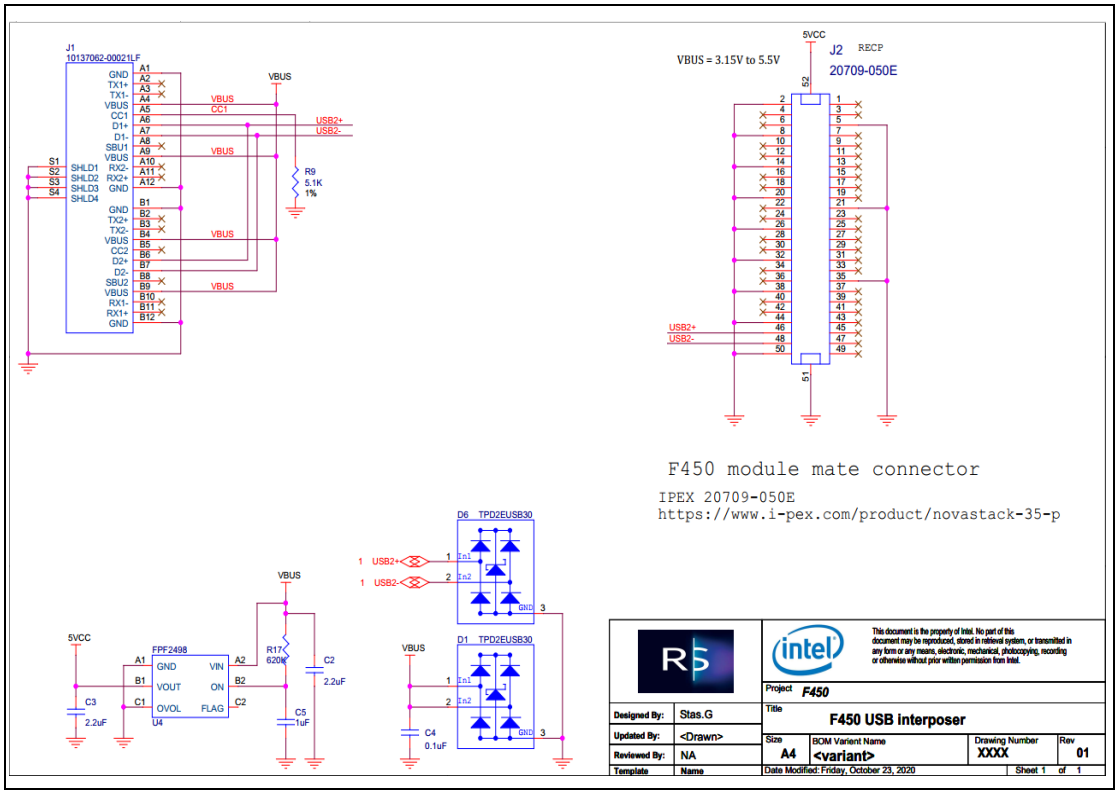

Figure 8-2. UART Interposer Reference Design

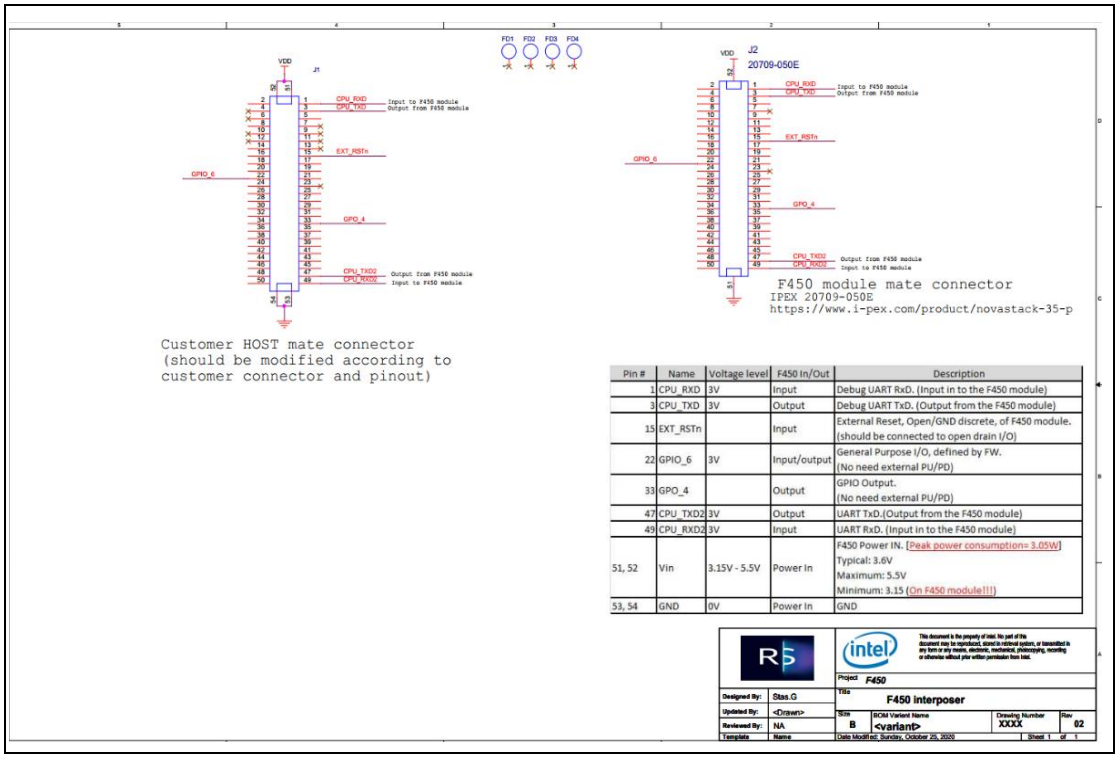

Pin #	Name	Voltage level	F450 In/Out	Description
1	CPU_RXD	3V	Input	Debug UART RxD. (Input in to the F450 module)
3	CPU_TXD	3V	Output	Debug UART TxD. (Output from the F450 module)
15	EXT_RSTn		Input	External Reset, Open/GND discrete, of F450 module. (should be connected to open drain I/O)
22	GPIO_6	3V	Input/output	General Purpose I/O, defined by FW. (No need external PU/PD)
33	GPO_4		Output	GPIO Output. (No need external PU/PD)
47	CPU_TXD2	3V	Output	UART TxD.(Output from the F450 module)
49	CPU_RXD2	3V	Input	UART RxD. (Input in to the F450 module)
51, 52	Vin	3.15V - 5.5V	Power In	F450 Power IN. [Peak power consumption= 3.05W] Typical: 3.6V Maximum: 5.5V Minimum: 3.15 (On F450 module!!!)
53, 54	GND	0V	Power In	GND