ORDER NO.	WOODHEAD NO.	COLOR
130147-0055	27W74MB	YELLOW

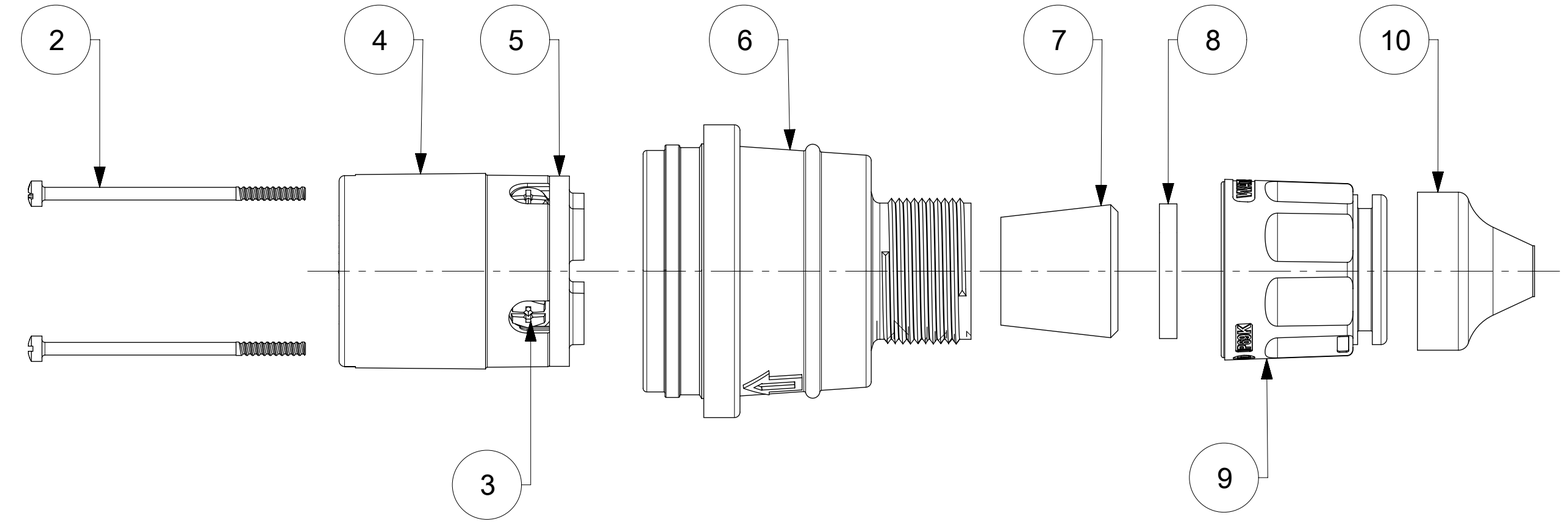

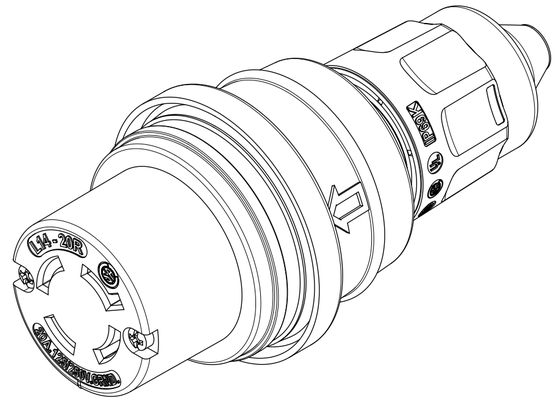

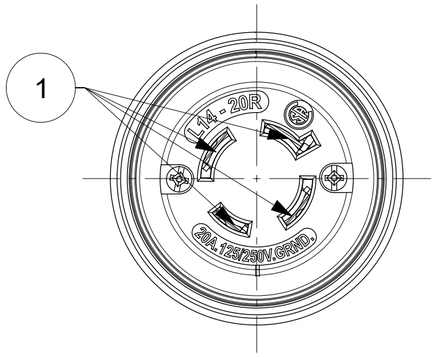

FACE VIEW

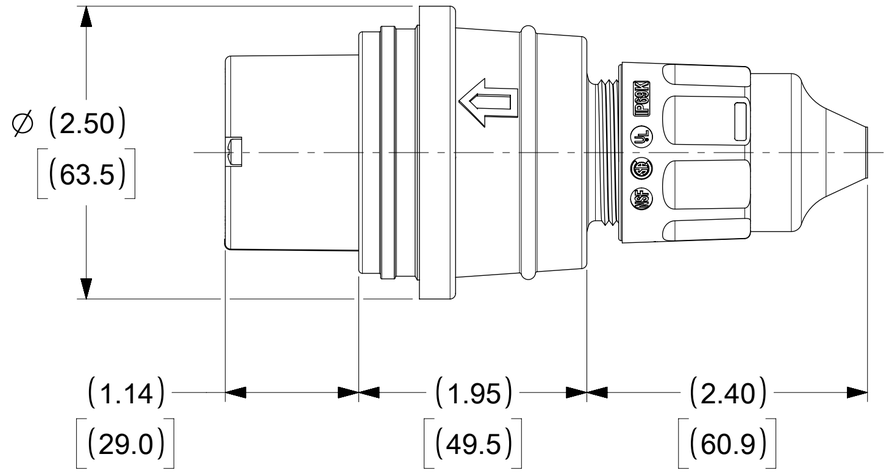

ITEM NO.	DESCRIPTIONS	MATERIAL	QTY.
1	BLADE	BRASS, NICKEL PLATED	4
2	RETAINING SCREWS	STAINLESS STEEL	2
3	CLAMP AND TERMINAL SCREW ASSY	BRASS, ZINC PLATED	4
4	INSERT	NYLON	1
5	TERMINAL COVER	POLYCARBONATE	1
6	HOUSING	SILICONE WITH NYLON THREAD	1
7	GROMMET	RUBBER	4
8	FRICTION RING	NYLON	1
9	COMPRESSION NUT	NYLON	1
10	CABLE GLOVE	SILICONE	1

NOTE:
1. ACCEPT CABLE RANGE FROM .437" TO .750"

DOCUMENT STATUS	P1	RELEASE DATE	2019/10/16 03:46:38

SYMBOLS: FA = 0, FC = 0, FD = 0, S = 0, ▼ = 0, C = 0, ☒ = 0, ■ = 0, ▽ = 0

THIS DRAWING CONTAINS INFORMATION THAT IS PROPRIETARY TO MOLEX ELECTRONIC TECHNOLOGIES, LLC AND SHOULD NOT BE USED WITHOUT WRITTEN PERMISSION

DIMENSION UNITS: INCH[MM] | SCALE: NTS

GENERAL TOLERANCES (UNLESS SPECIFIED)

	MM	INCH
4 PLACES	±	±
3 PLACES	±	±
2 PLACES	±	±
1 PLACE	±	±
0 PLACES	±	±
ANGULAR TOL	± °	

DRAFT WHERE APPLICABLE MUST REMAIN WITHIN DIMENSIONS

CURRENT REV DESC:

EC NO: 617799
DRWN: DSOPPIN 2019/01/14
CHK'D: DNGUYEN62 2019/05/31
APPR: HKNEELAND 2019/10/16

INITIAL REVISION:
DRWN: DSOPPIN 2019/01/14
APPR: HKNEELAND 2019/10/16

THIRD ANGLE PROJECTION | DRAWING: C-SIZE | SERIES: 130147

molex

WATERTITE CONNECTOR MOTOR BASE
3P4W L14-20

PRODUCT CUSTOMER DRAWING

DOCUMENT NUMBER	DOC TYPE	DOC PART	REVISION
1301470055	PSD	000	A

MATERIAL NUMBER	CUSTOMER	SHEET NUMBER
SEE TABLE	GENERAL MARKET	1 OF 1

FORMAT: Eng-lege-master-tb-prod-C
REVISION: D
DATE: 2018/01/18