GlobTek, Inc.
www.globtek.com
186 Veterans Drive,
Northvale, NJ 07647
Tel. (201) 784-1000
Fax (201) 784-0111

Drawing Title: GT-46400-4019-1.0-T3, ICT/ITE Power Supply, Efficiency Level: USA DOE Level VI / Eco-design Directive 2009/125/EC, (EU) 2019/1782, Case Color/Style: GlobTek Black, Desktop/External, Regulated Switchmode AC-DC Power Supply AC Adaptor, Input Rating: 100-240V~, 50-60 Hz, IEC 60320/C14 , Output Rating: 40W, 18.0V@2.22A, Output Configuration: 1200 mm, 16/1C + Shield Cond, UL 1185, Female Barrel 5.5 * 2.5 * 11mm with internal Spring Clip and Locking Notch or Equal, Ferrite: Core Size: 14.2*28.5*8.2, GlobTek Black, GT Cord # C2224, Pin Out: Center Positive (+V), symbol compliant with IEC 60417 symbol no. 5926, Blades/Input Cord: Not Applicable, Approvals: 230V CoC Tier 2; EAC; UKCA; Conforms to 62368-1; Morocco; SIQ; CAN ICES-3; CE; Class I; China RoHS; Level VI; LPS 60950; cULus; RoHS; Ukraine; VCCI; WEEE; cULus; CB 62368; CB 60950; PSE; PSE; FCC;	
Model No. GT-46400-4019-1.0-T3	
Part No./Ordering No. TR9CH2222LCP-N(R6B)	Rev B

In Addition to GlobTek Inc.'s renewed ISO9001:2015 - Quality Management System Certification, GlobTek Inc. is now certified to:

ISO13485:2016 - Medical Devices Quality Management System Certification
ISO14001:2015 - Environmental Management System Certification

ISO Certificates are available online at https://www.globtek.com/iso-certificates/

The acceptance of this specification and use of the product described in this document indicates the acceptance and binding of the customer to Globtek TERMS AND CONDITIONS (attached to the end of this document), which supersede all other agreements, terms, and conditions (https://en.globtek.com/terms-and-conditions/).

The purchaser of this product (Customer) agrees that it is their sole responsibility to determine suitability/fitness of the product described in this specification for their application and to take precautions for protection against any hazards attendant to the handling and use of the product.

Footnote:

GlobTek Inc. will not be liable for the safety and performance of these power supplies/battery packs if unauthorized access and repair occurs. End user should consult applicable UL, CSA or EN standards for proper installation instruction.

Limitation of Use:

GlobTek products are intended for use with commercial, medical, and/or industrial equipment only. GlobTek product are not authorized for use as mission critical components in life support hazardous environment, nuclear or aircraft applications without prior written approval from the CEO of GlobTek Inc.
Contents of this document are subject to change without prior notice.

Customer Approval of Specification:

Please approve, sign and send back to GlobTek so we can complete order processing.
A delay in receipt of this form will delay delivery schedule.

Company Name:	Customer P/N:
Quote Number:	Date:
Authorized Representative Name:	Authorized Representative Signature:

PROPRIETARY INFORMATION
PROPRIETARY OF GLOBTEK, INC. ANY REPRODUCTION, DISCLOSURE OR USE OF THIS DRAWING, IN WHOLE OR IN PART, IS HEREBY PROHIBITED EXCEPT AS SPECIFIED IN WRITING BY GLOBTEK, INC. © GlobTek, Inc. 2017 - 2022
guest /09/09/2022 10:08:19 AM

GlobTek, Inc.
www.globtek.com
186 Veterans Drive,
Northvale, NJ 07647
Tel. (201) 784-1000
Fax (201) 784-0111

Drawing Title: GT-46400-4019-1.0-T3, ICT/ITE Power Supply, Efficiency Level: USA DOE Level VI / Eco-design Directive 2009/125/EC, (EU) 2019/1782, Case Color/Style: GlobTek Black, Desktop/External, Regulated Switchmode AC-DC Power Supply AC Adaptor, Input Rating: 100-240V~, 50-60 Hz, IEC 60320/C14 , Output Rating: 40W, 18.0V@2.22A, Output Configuration: 1200 mm, 16/1C + Shield Cond, UL 1185, Female Barrel 5.5 * 2.5 * 11mm with internal Spring Clip and Locking Notch or Equal, Ferrite: Core Size: 14.2*28.5*8.2, GlobTek Black, GT Cord # C2224, Pin Out: Center Positive (+V), symbol compliant with IEC 60417 symbol no. 5926, Blades/Input Cord: Not Applicable, Approvals: 230V CoC Tier 2; EAC; UKCA; Conforms to 62368-1; Morocco; SIQ; CAN ICES-3; CE; Class I; China RoHS; Level VI; LPS 60950; cULus; RoHS; Ukraine; VCCI; WEEE; cULus; CB 62368; CB 60950; PSE; PSE; FCC;

Model No. GT-46400-4019-1.0-T3

Part No./Ordering No. TR9CH2222LCP-N(R6B) Rev B

REVISION HISTORY

REV	DESCRIPTION	SUB	DATE	APPROVED
B	Update engineering model from GT-46400-4024-6.0-T3 to GT-46400-4019-1.0-T3	rchiu	09/25/2017	QA
A	Initial Release	jwarn	05/02/2017	QA

POWER SUPPLY INFORMATION

TYPE:	Desktop/External
TECHNOLOGY:	Regulated Switchmode AC-DC Power Supply AC Adaptor
CASE COLOR:	GlobTek Black
NAMEPLATE RATED INPUT:	100-240V~, 50-60 Hz, 1.0A
INPUT CONFIG:	IEC 60320/C14
WATTS:	40.0
VOLTS OUT:	18.0
CURRENT OUT (Amps):	2.22
BLADE/CORD INCLUDED:	N/A Not Applicable
BLADE/CORD INSTALLED:	N/A :Not Applicable
INGRESS PROTECTION:	IPX0
GROUNDING CONFIGURATION:	(E1) Earthed output
EFFICIENCY LEVEL:	USA DOE Level VI / Eco-design Directive 2009/125/EC, (EU) 2019/1782 - Europe Code of Conduct on Energy Efficiency of External Power Supplies - Version 5
OUTPUT CONFIGURATION:	1200 mm, 16/1C + Shield Cond, UL 1185, Female Barrel 5.5 * 2.5 * 11mm with internal Spring Clip and Locking Notch or Equal, Ferrite: Core Size: 14.2*28.5*8.2, GlobTek Black, GT Cord # C2224
CONNECTOR PIN OUT:	Center Positive (+V), symbol compliant with IEC 60417 symbol no. 5926
LABEL SPECS:	Standard GT,L-1186
SPECIAL BARCODE LABEL MATERIAL:	No
PACK SPEC:	Standard DT, Individually Box, GT User Manual
USER MANUAL:	809-DESKTOPUSERMANUAL on A4 paper

PROPRIETARY INFORMATION
PROPRIETARY OF GLOBTEK, INC. ANY REPRODUCTION, DISCLOSURE OR USE OF THIS DRAWING, IN WHOLE OR IN PART, IS HEREBY PROHIBITED EXCEPT AS SPECIFIED IN WRITING BY GLOBTEK, INC. © GlobTek, Inc. 2017 - 2022
guest /09/09/2022 10:08:19 AM

GlobTek, Inc.
www.globtek.com
186 Veterans Drive,
Northvale, NJ 07647
Tel. (201) 784-1000
Fax (201) 784-0111

Drawing Title: GT-46400-4019-1.0-T3, ICT/ITE Power Supply, Efficiency Level: USA DOE Level VI / Eco-design Directive 2009/125/EC, (EU) 2019/1782, Case Color/Style: GlobTek Black, Desktop/External, Regulated Switchmode AC-DC Power Supply AC Adaptor, Input Rating: 100-240V~, 50-60 Hz, IEC 60320/C14 , Output Rating: 40W, 18.0V@2.22A, Output Configuration: 1200 mm, 16/1C + Shield Cond, UL 1185, Female Barrel 5.5 * 2.5 * 11mm with internal Spring Clip and Locking Notch or Equal, Ferrite: Core Size: 14.2*28.5*8.2, GlobTek Black, GT Cord # C2224, Pin Out: Center Positive (+V), symbol compliant with IEC 60417 symbol no. 5926, Blades/Input Cord: Not Applicable, Approvals: 230V CoC Tier 2; EAC; UKCA; Conforms to 62368-1; Morocco; SIQ; CAN ICES-3; CE; Class I; China RoHS; Level VI; LPS 60950; cULus; RoHS; Ukraine; VCCI; WEEE; cULus; CB 62368; CB 60950; PSE; PSE; FCC;	
Model No. GT-46400-4019-1.0-T3	
Part No./Ordering No. TR9CH2222LCP-N(R6B)	Rev B

Notes/Modifications/Customizations (notes in this section supersede the values shown in the standard spec):

DIMENSIONS ARE IN MM UNLESS SPECIFIED OTHERWISE.

PROPRIETARY INFORMATION
PROPRIETARY OF GLOBTEK, INC. ANY REPRODUCTION, DISCLOSURE OR USE OF THIS DRAWING, IN WHOLE OR IN PART, IS HEREBY PROHIBITED EXCEPT AS SPECIFIED IN WRITING BY GLOBTEK, INC. © GlobTek, Inc. 2017 - 2022
guest /09/09/2022 10:08:19 AM

GlobTek, Inc.
www.globtek.com
186 Veterans Drive,
Northvale, NJ 07647
Tel. (201) 784-1000
Fax (201) 784-0111

Drawing Title: GT-46400-4019-1.0-T3, ICT/ITE Power Supply, Efficiency Level: USA DOE Level VI / Eco-design Directive 2009/125/EC, (EU) 2019/1782, Case Color/Style: GlobTek Black, Desktop/External, Regulated Switchmode AC-DC Power Supply AC Adaptor, Input Rating: 100-240V~, 50-60 Hz, IEC 60320/C14 , Output Rating: 40W, 18.0V@2.22A, Output Configuration: 1200 mm, 16/1C + Shield Cond, UL 1185, Female Barrel 5.5 * 2.5 * 11mm with internal Spring Clip and Locking Notch or Equal, Ferrite: Core Size: 14.2*28.5*8.2, GlobTek Black, GT Cord # C2224, Pin Out: Center Positive (+V), symbol compliant with IEC 60417 symbol no. 5926, Blades/Input Cord: Not Applicable, Approvals: 230V CoC Tier 2; EAC; UKCA; Conforms to 62368-1; Morocco; SIQ; CAN ICES-3; CE; Class I; China RoHS; Level VI; LPS 60950; cULus; RoHS; Ukraine; VCCI; WEEE; cULus; CB 62368; CB 60950; PSE; PSE; FCC;	
Model No. GT-46400-4019-1.0-T3	
Part No./Ordering No. TR9CH2222LCP-N(R6B)	Rev B

ELECTRICAL SPECIFICATIONS

A) ELECTRICAL SPECIFICATIONS:
01. Input Voltage: Specified 90-264 Vac, Nameplate rated: 100-240Vac
02. Input Frequency: Specified 47-63 Hz, Nameplate rated 50-60Hz
03. Input Rated Current: 1.0A RMS Max
04. Inrush Current: No damage
05. Average Efficiency: 87.6% Min (CEC & DOE LEVEL VI Compliant); 88.3% Min (ErP European Commission's Ecodesign Directive (2005/32/EC) / CoC Tier 2 Compliant)
06. Input Power(no load): <0.1W (CEC &DOE Level VI Compliant); <0.075W ErP European Commission's Ecodesign Directive (2005/32/EC) / CoC Tier 2 Compliant)
07. Load regulation: ±5%
08. Ripple Voltage: 120mV (p-p) (100-240V AC Input). Measuring is done by 20MHz bandwidth oscilloscope and terminated each output with a 10uf aluminum electrolytic capacitor and 0.1uf ceramic capacitor.

B) PROTECTION
01. Over-Voltage: Electronically Protected Zener clamp across the output
02. Short Circuit: Electronically Protected unit will auto recover upon removal of fault
03. Over Temperature Protection
04. Over voltage protection: for 12V - 16V; for 15V - 20.25V, for 19V - 25.65, for 24V - 32.4V

C) SAFETY
01. Dielectric Withstand Voltage: 4242Vdc from primary to secondary
02. Earth Leakage Current: <3.5 mA at 240Vac input voltage
03. Touch Current: <0.25mA @ 240Vac input voltage
04. ROHS 2: Complies with EU 2011/65/EU and China SJ/T 11363-2006
05. Earth continuity test:<0.1Ω or < 0.2Ω when with SUPPLY CORD"

D) OTHER:
01. MTBF: 200,000 Hours @ 25°C ambient temperature
02. Operating Temperature: 0°C to 40°C ambient temperature
03. Humidity: 10% to 90% relative humidity
04. Storage Temperature: -10°C to 70°C
05. Cooling: Convection
06. ROHS 2: Complies with EU 2011/65/EU and China SJ/T 11363-2006

E) ENCLOSURE
01. Housing: High impact plastic, 94V0 polycarbonate, non-vented
02. Size: 111*52*32.3 +/-1.0 mm
03. Markings: Label and/or Pad Printed and/or Molded in the case

TO ADDRESS SYSTEM-LEVEL EMI CONCERNS, FERRITE CHOKES/BEADS MAY BE ADDED/REVISED UPON REQUEST. A SAMPLE KIT OF GLOBTEK'S STANDARD FERRITES IS AVAILABLE UNDER GLOBTEK P/N: EMI-MITIGATION-KIT1

PROPRIETARY INFORMATION
PROPRIETARY OF GLOBTEK, INC. ANY REPRODUCTION, DISCLOSURE OR USE OF THIS DRAWING, IN WHOLE OR IN PART, IS HEREBY PROHIBITED EXCEPT AS SPECIFIED IN WRITING BY GLOBTEK, INC. © GlobTek, Inc. 2017 - 2022
guest /09/09/2022 10:08:19 AM

GlobTek, Inc.
www.globtek.com
186 Veterans Drive,
Northvale, NJ 07647
Tel. (201) 784-1000
Fax (201) 784-0111

Drawing Title: GT-46400-4019-1.0-T3, ICT/ITE Power Supply, Efficiency Level: USA DOE Level VI / Eco-design Directive 2009/125/EC, (EU) 2019/1782, Case Color/Style: GlobTek Black, Desktop/External, Regulated Switchmode AC-DC Power Supply AC Adaptor, Input Rating: 100-240V~, 50-60 Hz, IEC 60320/C14 , Output Rating: 40W, 18.0V@2.22A, Output Configuration: 1200 mm, 16/1C + Shield Cond, UL 1185, Female Barrel 5.5 * 2.5 * 11mm with internal Spring Clip and Locking Notch or Equal, Ferrite: Core Size: 14.2*28.5*8.2, GlobTek Black, GT Cord # C2224, Pin Out: Center Positive (+V), symbol compliant with IEC 60417 symbol no. 5926, Blades/Input Cord: Not Applicable, Approvals: 230V CoC Tier 2; EAC; UKCA; Conforms to 62368-1; Morocco; SIQ; CAN ICES-3; CE; Class I; China RoHS; Level VI; LPS 60950; cULus; RoHS; Ukraine; VCCI; WEEE; cULus; CB 62368; CB 60950; PSE; PSE; FCC;	
Model No. GT-46400-4019-1.0-T3	
Part No./Ordering No. TR9CH2222LCP-N(R6B)	Rev B

FOR ADDITIONAL INFORMATION, PLEASE READ OUR WHITE PAPER AT:
https://en.globtek.com/technical-articles/ferrite-kit-radiated-emi-suppression-kit-for-globtek-power-supplies-cable-assemblies

INGRESS PROTECTION: IPX0

PROPRIETARY INFORMATION
PROPRIETARY OF GLOBTEK, INC. ANY REPRODUCTION, DISCLOSURE OR USE OF THIS DRAWING, IN WHOLE OR IN PART, IS HEREBY PROHIBITED EXCEPT AS SPECIFIED IN WRITING BY GLOBTEK, INC. © GlobTek, Inc. 2017 - 2022
guest /09/09/2022 10:08:19 AM

GlobTek, Inc.
www.globtek.com
186 Veterans Drive,
Northvale, NJ 07647
Tel. (201) 784-1000
Fax (201) 784-0111

Drawing Title: GT-46400-4019-1.0-T3, ICT/ITE Power Supply, Efficiency Level: USA DOE Level VI / Eco-design Directive 2009/125/EC, (EU) 2019/1782, Case Color/Style: GlobTek Black, Desktop/External, Regulated Switchmode AC-DC Power Supply AC Adaptor, Input Rating: 100-240V~, 50-60 Hz, IEC 60320/C14 , Output Rating: 40W, 18.0V@2.22A, Output Configuration: 1200 mm, 16/1C + Shield Cond, UL 1185, Female Barrel 5.5 * 2.5 * 11mm with internal Spring Clip and Locking Notch or Equal, Ferrite: Core Size: 14.2*28.5*8.2, GlobTek Black, GT Cord # C2224, Pin Out: Center Positive (+V), symbol compliant with IEC 60417 symbol no. 5926, Blades/Input Cord: Not Applicable, Approvals: 230V CoC Tier 2; EAC; UKCA; Conforms to 62368-1; Morocco; SIQ; CAN ICES-3; CE; Class I; China RoHS; Level VI; LPS 60950; cULus; RoHS; Ukraine; VCCI; WEEE; cULus; CB 62368; CB 60950; PSE; PSE; FCC;	
Model No. GT-46400-4019-1.0-T3	
Part No./Ordering No. TR9CH2222LCP-N(R6B)	Rev B

3D File Download https://www.globtek.com/file/dl/GT-46400-40VV-XX-T3.stp

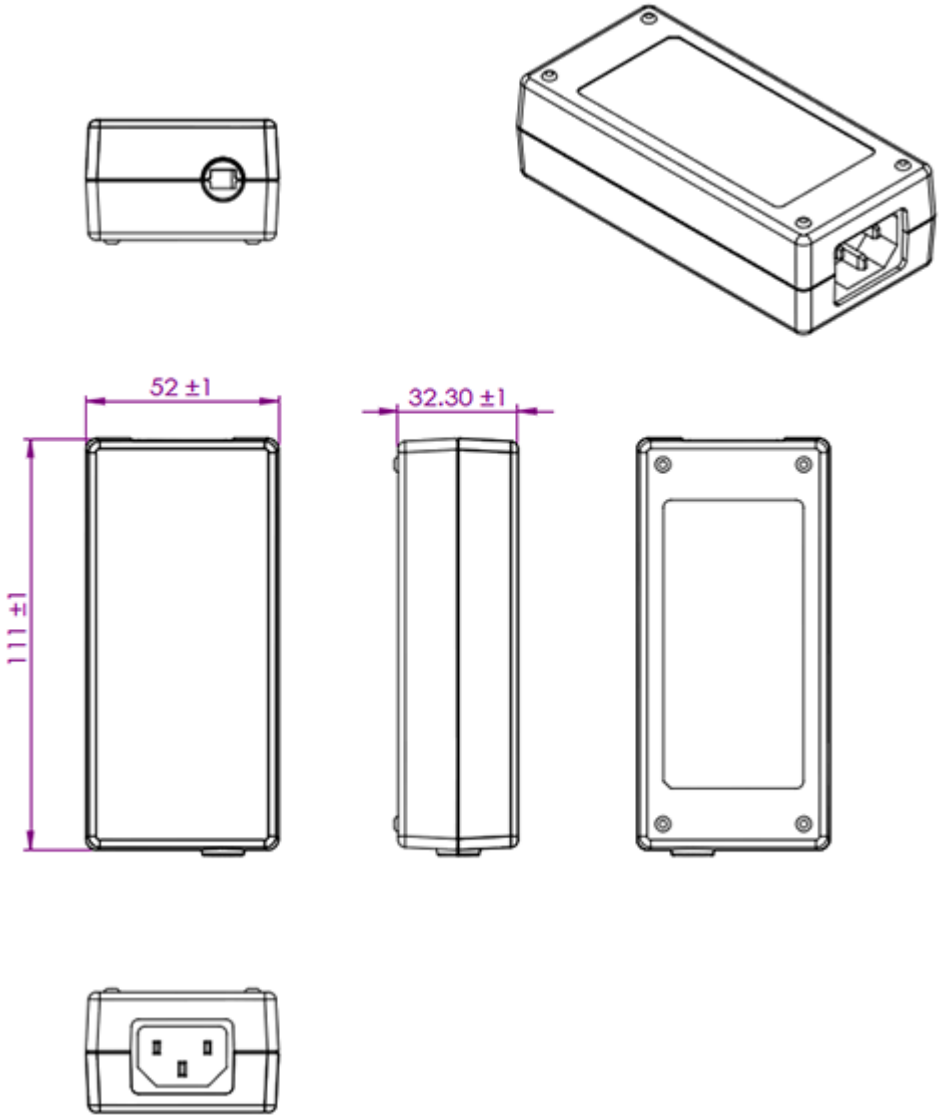

PROPRIETARY INFORMATION
PROPRIETARY OF GLOBTEK, INC. ANY REPRODUCTION, DISCLOSURE OR USE OF THIS DRAWING, IN WHOLE OR IN PART, IS HEREBY PROHIBITED EXCEPT AS SPECIFIED IN WRITING BY GLOBTEK, INC. © GlobTek, Inc. 2017 - 2022
guest /09/09/2022 10:08:19 AM

GlobTek, Inc.
www.globtek.com
186 Veterans Drive,
Northvale, NJ 07647
Tel. (201) 784-1000
Fax (201) 784-0111

Drawing Title: GT-46400-4019-1.0-T3, ICT/ITE Power Supply, Efficiency Level: USA DOE Level VI / Eco-design Directive 2009/125/EC, (EU) 2019/1782, Case Color/Style: GlobTek Black, Desktop/External, Regulated Switchmode AC-DC Power Supply AC Adaptor, Input Rating: 100-240V~, 50-60 Hz, IEC 60320/C14 , Output Rating: 40W, 18.0V@2.22A, Output Configuration: 1200 mm, 16/1C + Shield Cond, UL 1185, Female Barrel 5.5 * 2.5 * 11mm with internal Spring Clip and Locking Notch or Equal, Ferrite: Core Size: 14.2*28.5*8.2, GlobTek Black, GT Cord # C2224, Pin Out: Center Positive (+V), symbol compliant with IEC 60417 symbol no. 5926, Blades/Input Cord: Not Applicable, Approvals: 230V CoC Tier 2; EAC; UKCA; Conforms to 62368-1; Morocco; SIQ; CAN ICES-3; CE; Class I; China RoHS; Level VI; LPS 60950; cULus; RoHS; Ukraine; VCCI; WEEE; cULus; CB 62368; CB 60950; PSE; PSE; FCC;	
Model No. GT-46400-4019-1.0-T3	
Part No./Ordering No. TR9CH2222LCP-N(R6B)	Rev B

DERATING CURVE

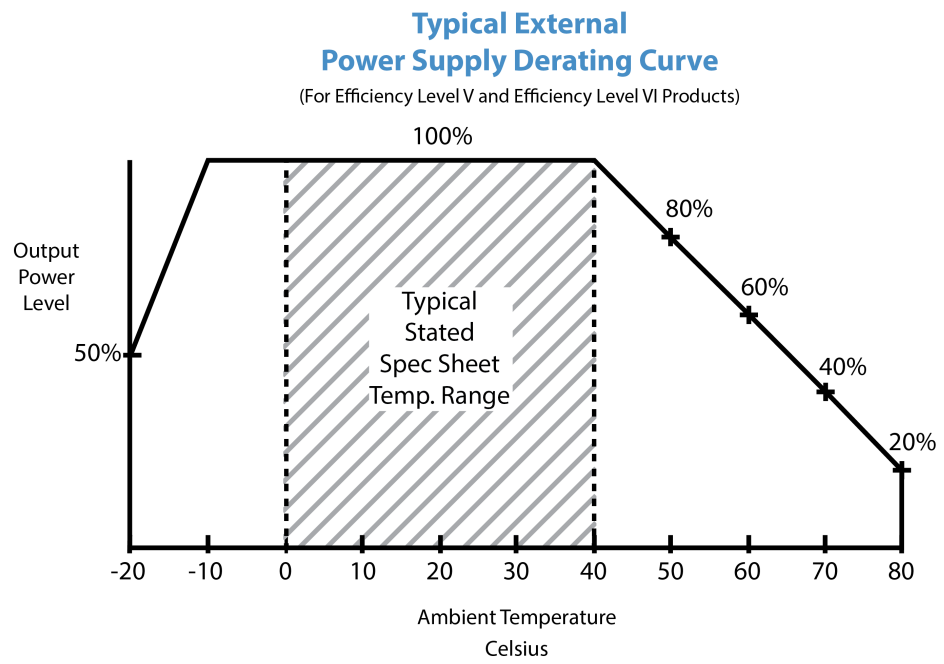

PROPRIETARY INFORMATION
PROPRIETARY OF GLOBTEK, INC. ANY REPRODUCTION, DISCLOSURE OR USE OF THIS DRAWING, IN WHOLE OR IN PART, IS HEREBY PROHIBITED EXCEPT AS SPECIFIED IN WRITING BY GLOBTEK, INC. © GlobTek, Inc. 2017 - 2022
guest /09/09/2022 10:08:19 AM

GlobTek, Inc.
www.globtek.com
186 Veterans Drive,
Northvale, NJ 07647
Tel. (201) 784-1000
Fax (201) 784-0111

Drawing Title: GT-46400-4019-1.0-T3, ICT/ITE Power Supply, Efficiency Level: USA DOE Level VI / Eco-design Directive 2009/125/EC, (EU) 2019/1782, Case Color/Style: GlobTek Black, Desktop/External, Regulated Switchmode AC-DC Power Supply AC Adaptor, Input Rating: 100-240V~, 50-60 Hz, IEC 60320/C14 , Output Rating: 40W, 18.0V@2.22A, Output Configuration: 1200 mm, 16/1C + Shield Cond, UL 1185, Female Barrel 5.5 * 2.5 * 11mm with internal Spring Clip and Locking Notch or Equal, Ferrite: Core Size: 14.2*28.5*8.2, GlobTek Black, GT Cord # C2224, Pin Out: Center Positive (+V), symbol compliant with IEC 60417 symbol no. 5926, Blades/Input Cord: Not Applicable, Approvals: 230V CoC Tier 2; EAC; UKCA; Conforms to 62368-1; Morocco; SIQ; CAN ICES-3; CE; Class I; China RoHS; Level VI; LPS 60950; cULus; RoHS; Ukraine; VCCI; WEEE; cULus; CB 62368; CB 60950; PSE; PSE; FCC;	
Model No. GT-46400-4019-1.0-T3	
Part No./Ordering No. TR9CH2222LCP-N(R6B)	Rev B

INPUT CONFIGURATION

(E1) Earthed output

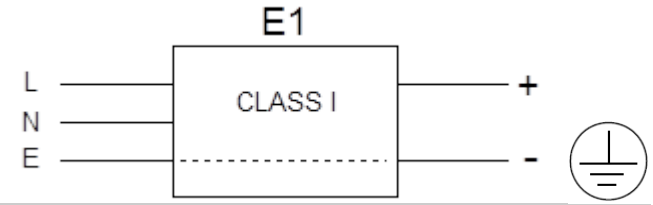

Alternate grounding configurations available upon request.

Blades/Cord Included:N/A:Not Applicable

Blades/Cord Installed:N/A:Not Applicable

IEC 60320/C14 AC Inlet Connector, Class I, Earth Ground

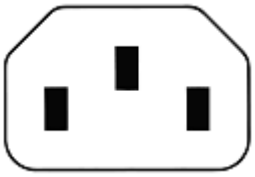

Mates with IEC 60320/C13 Plug

Optional Locking IEC60320 Receptable and cord option available on some models by request.:



Standard International IEC 320/C13 Cordsets

Below are standard cordsets which are "not included" (unless stated above); these can be purchased separately or packaged with the power supply. Contact your Sales Engineer if the style required is not shown below. Many more available in different lengths, colors or cable material.

PROPRIETARY INFORMATION
PROPRIETARY OF GLOBTEK, INC. ANY REPRODUCTION, DISCLOSURE OR USE OF THIS DRAWING, IN WHOLE OR IN PART, IS HEREBY PROHIBITED EXCEPT AS SPECIFIED IN WRITING BY GLOBTEK, INC. © GlobTek, Inc. 2017 - 2022
guest /09/09/2022 10:08:19 AM

Stock Power Supply Cords

Part Number/ Link	Country	Plug	Termination	Length (mm)	(Ft)
3021457F701(R)	N. American (Type B)	NEMA 5-15P	IEC 320/C13	2150	7
1191068F0701(R)	N. American (Type B)	NEMA 5-15P Hospital	IEC 320/C13	2459	8
2194272M5701-T(R)	Argentina (Type I)	IRAM 2073	IEC 320/C13	2500	8
5502022M5701A(R)	Australian (Type I)	AS3112 / 3 PRONG	IEC 320/C13	2500	8
204B4272M5701(R)	Brazil (Type N)	BRAZIL	IEC 320/C13	2500	8
6023602M5701(R)	China (Type I)	CCC GR2099	IEC 320/C13	2500	8
G8014272M5701(R)	Danish (Type K)	AFSNIT SECTION 107-2-D1	IEC 320/C13	2500	8
23144272M5701-T(R)	Europe (Type E)	CEE 7/7	IEC 320/C13	2500	8
23134272M5701EUKR(R)	Europe/Korea Combo (Type E)	CEE 7/7 / KSC8305	IEC 320/C13	2500	8
205IN4272M5701(R)	India (Type D)	India IS 1293 (also known as IA16A3 or BS546)	IEC 320/C13	2500	8
208IN4272M5701(R)	India (Type M)	India IS 1293 (also known as IA16A3 or BS546)	IEC320/C13	2500	8
377C4272M5701(R)	Israel (Type H)	ISL 377C	IEC 320/C13	2500	8
23024272M5701(R)	Italy (Type L)	CEI 23-16/VII	IEC 320/C13	2500	8
3003339F701(R) [3x1.25mm2] 3003068F2701-HK(R) [3 x 2.0mm2]	Japan (Type B)	JIS 8303 / 3 PINS	IEC 320/C13	2500	8
302J115J6F0701J(R)	North America / Japan (Type B – 12A)	NEMA 5-15P (cULus approved), Japan JIS C 8303 (PSE Approved)	IEC 320/C13	1830	6
302J104J6F0701J(R)	North America / Japan (Type B – 15A)	NEMA 5-15P (cULus approved), Japan JIS C 8303 (PSE Approved)	IEC 320/C13	1830	6
302JT104J9F0701JT(R)	North America / Japan / Taiwan (Type B – 15A)	NEMA 5-15P (cULus approved), Japan JIS C 8303 (PSE Approved), Taiwan CNS 6797 (BSMI Approved)	IEC 320/C13	2800	9
2313K3432M5701(R)	Korea (Type F)	KS C 8305	IEC 320/C13	2500	8

PROPRIETARY INFORMATION

PROPRIETARY OF GLOBTEK, INC. ANY REPRODUCTION, DISCLOSURE OR USE OF THIS DRAWING, IN WHOLE OR IN PART, IS HEREBY PROHIBITED EXCEPT AS SPECIFIED IN WRITING BY GLOBTEK, INC. © GlobTek, Inc. 2017 - 2022

guest /09/09/2022 10:08:19 AM

5804272M5701(R)	Russia (Type F)	GOST 7396	IEC 320/C13	2500	8
2084272M5701(R)	South Africa (Type M)	South Africa SABS164-1 (16A type)	IEC 320/C13	2500	8
23214272M5701(R)	Switzerland (Type J)	SEV 1011	IEC 320/C13	2500	8
3003322M5701(R)	Taiwan (Type B)	BSMI	IEC 320/C13	2500	8
6363762M5701(R)	Thailand (Type O)	TIS 166-2549	IEC 320/C13	2500	8
PZ0800100-2M5BK13H(R	UK, Hong Kong,Singapore, Gulf States (Type G)	BS 1363A	IEC 320/C13	2500	8
7055002M5701A(R)	International	IEC 320 C14-C13	IEC 320/C13	2500	8

PROPRIETARY INFORMATION

PROPRIETARY OF GLOBTEK, INC. ANY REPRODUCTION, DISCLOSURE OR USE OF THIS DRAWING, IN WHOLE OR IN PART, IS HEREBY PROHIBITED EXCEPT AS SPECIFIED IN WRITING BY GLOBTEK, INC. © GlobTek, Inc. 2017 - 2022

guest /09/09/2022 10:08:19 AM

GlobTek, Inc. www.globtek.com 186 Veterans Drive, Northvale, NJ 07647 Tel. (201) 784-1000 Fax (201) 784-0111	Drawing Title: GT-46400-4019-1.0-T3, ICT/ITE Power Supply, Efficiency Level: USA DOE Level VI / Eco-design Directive 2009/125/EC, (EU) 2019/1782, Case Color/Style: GlobTek Black, Desktop/External, Regulated Switchmode AC-DC Power Supply AC Adaptor, Input Rating: 100-240V~, 50-60 Hz, IEC 60320/C14 , Output Rating: 40W, 18.0V@2.22A, Output Configuration: 1200 mm, 16/1C + Shield Cond, UL 1185, Female Barrel 5.5 * 2.5 * 11mm with internal Spring Clip and Locking Notch or Equal, Ferrite: Core Size: 14.2*28.5*8.2, GlobTek Black, GT Cord # C2224, Pin Out: Center Positive (+V), symbol compliant with IEC 60417 symbol no. 5926, Blades/Input Cord: Not Applicable, Approvals: 230V CoC Tier 2; EAC; UKCA; Conforms to 62368-1; Morocco; SIQ; CAN ICES-3; CE; Class I; China RoHS; Level VI; LPS 60950; cULus; RoHS; Ukraine; VCCI; WEEE; cULus; CB 62368; CB 60950; PSE; PSE; FCC;	
	Model No. GT-46400-4019-1.0-T3	
	Part No./Ordering No. TR9CH2222LCP-N(R6B)	Rev B

OUTPUT CORD AND CONNECTOR: LCL/C2224

ACTUAL CONNECTORS, OVERMOLDS, FERRITES MAY VARY SLIGHTLY FROM THE PICTURE BELOW

CABLE TYPE	UL 1185
CABLE LENGTH (mm)	1200
CABLE TOLERANCE (mm)	+100-0
WIRE GAUGE (AWG)	16
CONDUCTORS	1C + Shield
HANK DIMENSION (mm)	80 ± 10
CABLE / CONNECTOR OVERMOLD COLOR	GlobTek Black
FERRITE TYPE / DIMENSION	Core Size: 14.2*28.5*8.2
FERRITE # OF TURNS(Definition)	2 Pass thru core (1 turns)
FERRITE DIMENSION FROM STRAIN RELIEF	50 ±10
FERRITE DIMENSION FROM PLUG	N/A
PLUG TYPE	Female Barrel 5.5 * 2.5 * 11mm with internal Spring Clip and Locking Notch or Equal
OUTPUT CONNECTOR GENDER	
OVERMOLDED	
OVER MOLD ORIENTATION	Straight
CONNECTOR PIN OUT:	Center Positive (+V), symbol compliant with IEC 60417 symbol no. 5926
ADDITIONAL REQUIREMENTS	

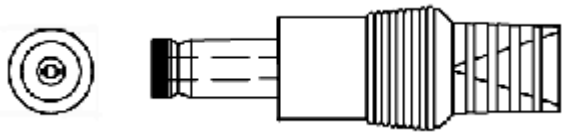

ADDITIONAL OUTPUT PLUG OPTIONS ARE AVAILABLE AT https://www.globtek.com/connectors/
STANDARD PLUGS AND CONNECTORS CAN BE SEEN ONLINE AT https://www.globtek.com/connectors/
CALCULATE VOLTAGE REGULATION/DROP WITH OUR ONLINE CALCULATOR: https://en.globtek.com/output-cable-regulation-calculator/

PROPRIETARY INFORMATION
PROPRIETARY OF GLOBTEK, INC. ANY REPRODUCTION, DISCLOSURE OR USE OF THIS DRAWING, IN WHOLE OR IN PART, IS HEREBY PROHIBITED EXCEPT AS SPECIFIED IN WRITING BY GLOBTEK, INC. © GlobTek, Inc. 2017 - 2022
guest /09/09/2022 10:08:19 AM

GlobTek, Inc.
www.globtek.com
186 Veterans Drive,
Northvale, NJ 07647
Tel. (201) 784-1000
Fax (201) 784-0111

Drawing Title: GT-46400-4019-1.0-T3, ICT/ITE Power Supply, Efficiency Level: USA DOE Level VI / Eco-design Directive 2009/125/EC, (EU) 2019/1782, Case Color/Style: GlobTek Black, Desktop/External, Regulated Switchmode AC-DC Power Supply AC Adaptor, Input Rating: 100-240V~, 50-60 Hz, IEC 60320/C14 , Output Rating: 40W, 18.0V@2.22A, Output Configuration: 1200 mm, 16/1C + Shield Cond, UL 1185, Female Barrel 5.5 * 2.5 * 11mm with internal Spring Clip and Locking Notch or Equal, Ferrite: Core Size: 14.2*28.5*8.2, GlobTek Black, GT Cord # C2224, Pin Out: Center Positive (+V), symbol compliant with IEC 60417 symbol no. 5926, Blades/Input Cord: Not Applicable, Approvals: 230V CoC Tier 2; EAC; UKCA; Conforms to 62368-1; Morocco; SIQ; CAN ICES-3; CE; Class I; China RoHS; Level VI; LPS 60950; cULus; RoHS; Ukraine; VCCI; WEEE; cULus; CB 62368; CB 60950; PSE; PSE; FCC;	
Model No. GT-46400-4019-1.0-T3	
Part No./Ordering No. TR9CH2222LCP-N(R6B)	Rev B

OUTPUT CONNECTOR HOOK UP

TO ADDRESS SYSTEM-LEVEL EMI CONCERNS, FERRITE CHOKES/BEADS MAY BE ADDED/REVISED UPON REQUEST. A SAMPLE KIT OF GLOBTEK'S STANDARD FERRITES IS AVAILABLE UNDER GLOBTEK P/N: EMI-MITIGATION-KIT1

FOR ADDITIONAL INFORMATION, PLEASE READ OUR WHITE PAPER AT:
https://en.globtek.com/technical-articles/ferrite-kit-radiated-emi-suppression-kit-for-globtek-power-supplies-cable-assemblies

PROPRIETARY INFORMATION
PROPRIETARY OF GLOBTEK, INC. ANY REPRODUCTION, DISCLOSURE OR USE OF THIS DRAWING, IN WHOLE OR IN PART, IS HEREBY PROHIBITED EXCEPT AS SPECIFIED IN WRITING BY GLOBTEK, INC. © GlobTek, Inc. 2017 - 2022
guest /09/09/2022 10:08:19 AM

GlobTek, Inc. www.globtek.com 186 Veterans Drive, Northvale, NJ 07647 Tel. (201) 784-1000 Fax (201) 784-0111	Drawing Title: GT-46400-4019-1.0-T3, ICT/ITE Power Supply, Efficiency Level: USA DOE Level VI / Eco-design Directive 2009/125/EC, (EU) 2019/1782, Case Color/Style: GlobTek Black, Desktop/External, Regulated Switchmode AC-DC Power Supply AC Adaptor, Input Rating: 100-240V~, 50-60 Hz, IEC 60320/C14 , Output Rating: 40W, 18.0V@2.22A, Output Configuration: 1200 mm, 16/1C + Shield Cond, UL 1185, Female Barrel 5.5 * 2.5 * 11mm with internal Spring Clip and Locking Notch or Equal, Ferrite: Core Size: 14.2*28.5*8.2, GlobTek Black, GT Cord # C2224, Pin Out: Center Positive (+V), symbol compliant with IEC 60417 symbol no. 5926, Blades/Input Cord: Not Applicable, Approvals: 230V CoC Tier 2; EAC; UKCA; Conforms to 62368-1; Morocco; SIQ; CAN ICES-3; CE; Class I; China RoHS; Level VI; LPS 60950; cULus; RoHS; Ukraine; VCCI; WEEE; cULus; CB 62368; CB 60950; PSE; PSE; FCC;	
	Model No. GT-46400-4019-1.0-T3	
	Part No./Ordering No. TR9CH2222LCP-N(R6B)	Rev B

LABEL:L-1186

LABEL P/N:	Standard GT
MATERIAL:	Flat Thermal Transfer, Imprintable, Polyester Label and/or Pad Printed and/or Molded, and/or Laser Engraved in the case
BACKGROUND COLOR:	Black if housing is Black, White or Silver if housing is White or Gray.
TEXT COLOR:	White or Silver if label is Black Background for Black housing. Black if label is White or Silver background and Housing is White or Gray.
LABEL WIDTH (mm):	37.5
LABEL HEIGHT (mm):	77.5
SPECIAL BARCODE LABEL MATERIAL:	No

Below is the minimum information which will appear on the label. NOTE: in the logo area additional/actual positioning of symbols and text is subjected to change as per agency updates/requirements or additional model approvals become available.
Regulatory certifications/label markings may be in logo area on the label or molded into the case housing outside the label area.
Information will be shown via label and/or pad printed and/or molded and/or laser engraved in the case. * Date code markings at GlobTek option
.

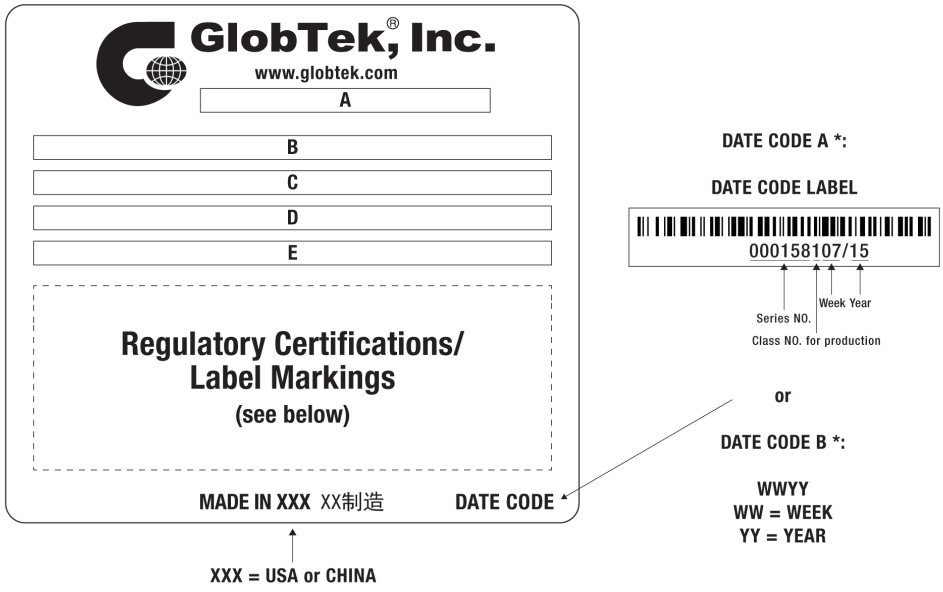

A=ICT/ITE Power Supply
B=P/N: (料号) TR9CH2222LCP-N(R6B)
C=Model (型号) GT-46400-4019-1.0-T3
D=Input (输入)100-240V~, 50-60 Hz, 1.0A
E=Output (输出)18.0 V ⎓ 2.22 A, 40.0W

PROPRIETARY INFORMATION
PROPRIETARY OF GLOBTEK, INC. ANY REPRODUCTION, DISCLOSURE OR USE OF THIS DRAWING, IN WHOLE OR IN PART, IS HEREBY PROHIBITED EXCEPT AS SPECIFIED IN WRITING BY GLOBTEK, INC. © GlobTek, Inc. 2017 - 2022
guest /09/09/2022 10:08:19 AM

GlobTek, Inc.
www.globtek.com
186 Veterans Drive,
Northvale, NJ 07647
Tel. (201) 784-1000
Fax (201) 784-0111

Drawing Title: GT-46400-4019-1.0-T3, ICT/ITE Power Supply, Efficiency Level: USA DOE Level VI / Eco-design Directive 2009/125/EC, (EU) 2019/1782, Case Color/Style: GlobTek Black, Desktop/External, Regulated Switchmode AC-DC Power Supply AC Adaptor, Input Rating: 100-240V~, 50-60 Hz, IEC 60320/C14 , Output Rating: 40W, 18.0V@2.22A, Output Configuration: 1200 mm, 16/1C + Shield Cond, UL 1185, Female Barrel 5.5 * 2.5 * 11mm with internal Spring Clip and Locking Notch or Equal, Ferrite: Core Size: 14.2*28.5*8.2, GlobTek Black, GT Cord # C2224, Pin Out: Center Positive (+V), symbol compliant with IEC 60417 symbol no. 5926, Blades/Input Cord: Not Applicable, Approvals: 230V CoC Tier 2; EAC; UKCA; Conforms to 62368-1; Morocco; SIQ; CAN ICES-3; CE; Class I; China RoHS; Level VI; LPS 60950; cULus; RoHS; Ukraine; VCCI; WEEE; cULus; CB 62368; CB 60950; PSE; PSE; FCC;	
Model No. GT-46400-4019-1.0-T3	
Part No./Ordering No. TR9CH2222LCP-N(R6B)	Rev B

AGENCY ONLINE DOCUMENTS	http://www.globtek.info/certs/GT-46400-WWVV-X.X-TZ/
CE EC-Declaration for Medical	Contact GlobTek for more information
CE EC-Declaration for Industrial/Commercial/ITE	http://globtek.force.com/models/ec_declaration_product?id=01ta0000007dRH0&i=2
CE EC-Declaration for Household	Contact GlobTek for more information
UKCA-Declaration for Medical	Contact GlobTek for more information
UKCA-Declaration for Industrial/Commercial/ITE	http://globtek.force.com/models/ukca_declaration_product?id=01ta0000007dRH0&i=2
UKCA-Declaration for Household	Contact GlobTek for more information
Morocco SDoC Declaration	https://globtek.secure.force.com/models/Morocco_SDoC_Declaration?id=a0Oa000000MikBiEAJ
RoHS/RoHS3 Declaration	https://www.globtek.com/pdf/rohs_cert/01ta0000007dRH0AAM
REACH Declaration	https://www.globtek.com/pdf/iso_certificates/REACH.pdf
Conflict Minerals Declaration	https://www.globtek.com/pdf/conflict-minerals.pdf
Prop 65 Statement	https://en.globtek.com/prop-65-statement.pdf

IPXY rating is based on 3rd party testing and customers should check suitability and test system level IPXY rating before ordering.

Regulatory Certifications/Label Markings

Below follows a link to the latest regulatory certifications and marks for this specific product. National standards as well as certification schemes are constantly changing and so is the set of certification marks and symbols applicable to this product. Various standards, marks and symbols, and certificates are subject to change at any time without notice.

Additional standards or unique country certifications are available upon request. Please contact Globtek to request a quotation.

LATEST PRODUCT/MODEL CERTIFICATIONS:	https://www.globtek.com/datasheet/w71058
AGENCY ONLINE DOCUMENTS:	http://www.globtek.info/certs/GT-46400-WWVV-X.X-TZ/
	(E1) Earthed output
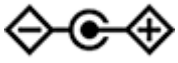	Center Positive (+V), symbol compliant with IEC 60417 symbol no. 5926

PROPRIETARY INFORMATION
PROPRIETARY OF GLOBTEK, INC. ANY REPRODUCTION, DISCLOSURE OR USE OF THIS DRAWING, IN WHOLE OR IN PART, IS HEREBY PROHIBITED EXCEPT AS SPECIFIED IN WRITING BY GLOBTEK, INC. © GlobTek, Inc. 2017 - 2022
guest /09/09/2022 10:08:19 AM

GlobTek, Inc.
www.globtek.com
186 Veterans Drive,
Northvale, NJ 07647
Tel. (201) 784-1000
Fax (201) 784-0111

Drawing Title: GT-46400-4019-1.0-T3, ICT/ITE Power Supply, Efficiency Level: USA DOE Level VI / Eco-design Directive 2009/125/EC, (EU) 2019/1782, Case Color/Style: GlobTek Black, Desktop/External, Regulated Switchmode AC-DC Power Supply AC Adaptor, Input Rating: 100-240V~, 50-60 Hz, IEC 60320/C14 , Output Rating: 40W, 18.0V@2.22A, Output Configuration: 1200 mm, 16/1C + Shield Cond, UL 1185, Female Barrel 5.5 * 2.5 * 11mm with internal Spring Clip and Locking Notch or Equal, Ferrite: Core Size: 14.2*28.5*8.2, GlobTek Black, GT Cord # C2224, Pin Out: Center Positive (+V), symbol compliant with IEC 60417 symbol no. 5926, Blades/Input Cord: Not Applicable, Approvals: 230V CoC Tier 2; EAC; UKCA; Conforms to 62368-1; Morocco; SIQ; CAN ICES-3; CE; Class I; China RoHS; Level VI; LPS 60950; cULus; RoHS; Ukraine; VCCI; WEEE; cULus; CB 62368; CB 60950; PSE; PSE; FCC;	
Model No. GT-46400-4019-1.0-T3	
Part No./Ordering No. TR9CH2222LCP-N(R6B)	Rev B

PACKAGING

Packing Spec P/N:	Standard DT, Individually Box, GT User Manual
Box Qty:	54
Gift Box Size (mm):	167*58*60
Gift Box Color:	White
Master Carton Size (mm):	520 x 370 x 205
Master Carton Cubic Volume (m^3):	0.04
Master GW (Kg):	15.6 kg
BLADES INCLUDED:	N/A: Not Applicable
BLADE/CORD INSTALLED:	N/A: Not Applicable
USER MANUAL*:	809-DESKTOPUSERMANUAL on A4 paper
USER MANUAL WEB LINK:	https://en.globtek.com/pdf/809-DESKTOPUSERMANUAL.jpg

* This specification sheet is considered the user manual for all applications. It is expected that the buyer of this product will use it to formulate their own user manual for their end product and a user manual specifically for the power adapter is not usually required. If a user manual is not specifically listed above then none will be provided with this unit.

If specific packaging is required, this section must specify all requirements and note “no exceptions”. If this section does not specify packaging, it is subject to change without notice at GlobTek’s discretion

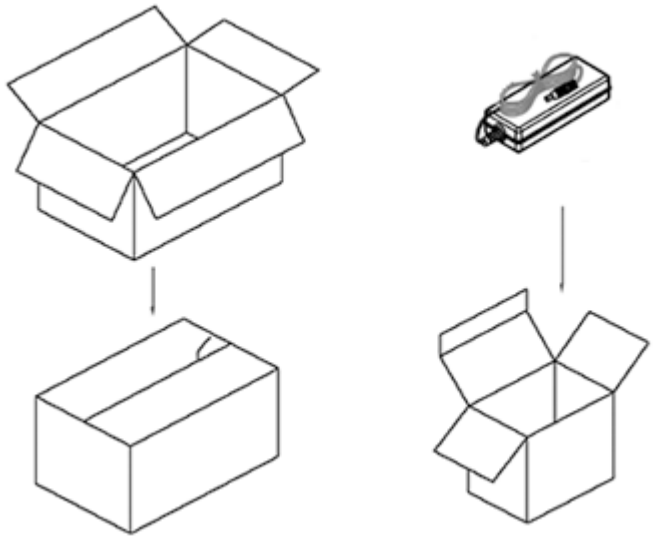

PROPRIETARY INFORMATION
PROPRIETARY OF GLOBTEK, INC. ANY REPRODUCTION, DISCLOSURE OR USE OF THIS DRAWING, IN WHOLE OR IN PART, IS HEREBY PROHIBITED EXCEPT AS SPECIFIED IN WRITING BY GLOBTEK, INC. © GlobTek, Inc. 2017 - 2022
guest /09/09/2022 10:08:19 AM

GlobTek, Inc.
www.globtek.com
186 Veterans Drive,
Northvale, NJ 07647
Tel. (201) 784-1000
Fax (201) 784-0111

Drawing Title: GT-46400-4019-1.0-T3, ICT/ITE Power Supply, Efficiency Level: USA DOE Level VI / Eco-design Directive 2009/125/EC, (EU) 2019/1782, Case Color/Style: GlobTek Black, Desktop/External, Regulated Switchmode AC-DC Power Supply AC Adaptor, Input Rating: 100-240V~, 50-60 Hz, IEC 60320/C14 , Output Rating: 40W, 18.0V@2.22A, Output Configuration: 1200 mm, 16/1C + Shield Cond, UL 1185, Female Barrel 5.5 * 2.5 * 11mm with internal Spring Clip and Locking Notch or Equal, Ferrite: Core Size: 14.2*28.5*8.2, GlobTek Black, GT Cord # C2224, Pin Out: Center Positive (+V), symbol compliant with IEC 60417 symbol no. 5926, Blades/Input Cord: Not Applicable, Approvals: 230V CoC Tier 2; EAC; UKCA; Conforms to 62368-1; Morocco; SIQ; CAN ICES-3; CE; Class I; China RoHS; Level VI; LPS 60950; cULus; RoHS; Ukraine; VCCI; WEEE; cULus; CB 62368; CB 60950; PSE; PSE; FCC;	
Model No. GT-46400-4019-1.0-T3	
Part No./Ordering No. TR9CH2222LCP-N(R6B)	Rev B

INSTRUCTIONS TO THE OEM SYSTEMS ENGINEER

It is the responsibility of the OEM systems engineer to provide the end system user instructions and warnings for the use of this product in the end system.

If an input cord is required for this product, AC Mains voltage should be provided to the power supply by a power supply cord approved to the national standards of the country in which it will be used.

This product is not designed to be repaired. No serviceable parts inside. A blown internal fuse is an indication of catastrophic failure of circuit component(s). If a Failure Analysis is required for a failed power supply/battery charger, please return the damaged unit to GlobTek for an accurate determination of the root cause of the failure.

EMC Compliance of the complete OEM product, including the GlobTek power supply/battery charger needs to be verified by the OEM systems engineer.

INSTRUCTION SHEET

N/A

PROPRIETARY INFORMATION
PROPRIETARY OF GLOBTEK, INC. ANY REPRODUCTION, DISCLOSURE OR USE OF THIS DRAWING, IN WHOLE OR IN PART, IS HEREBY PROHIBITED EXCEPT AS SPECIFIED IN WRITING BY GLOBTEK, INC. © GlobTek, Inc. 2017 - 2022
guest /09/09/2022 10:08:19 AM