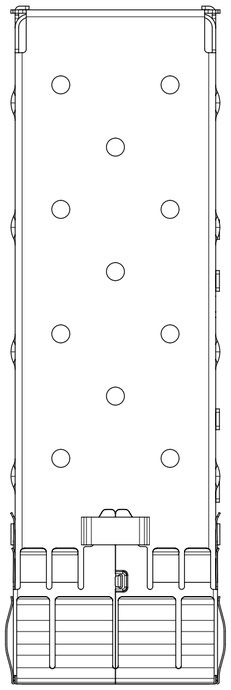

14.50
(OUTSIDE CAGE)

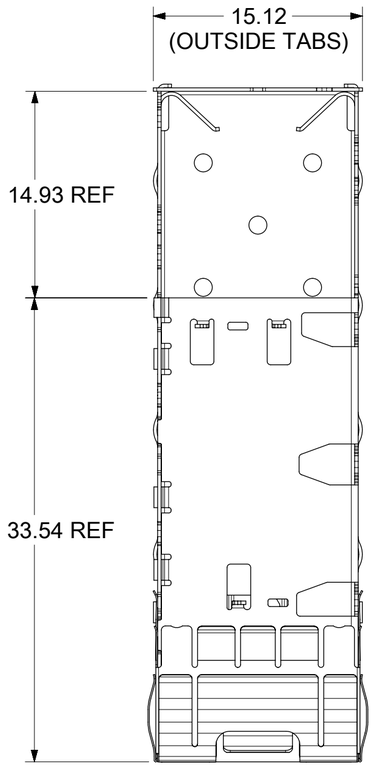

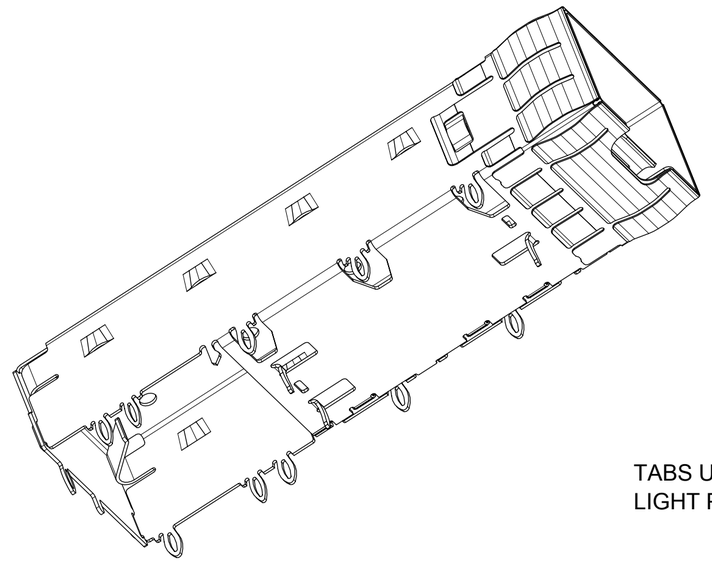

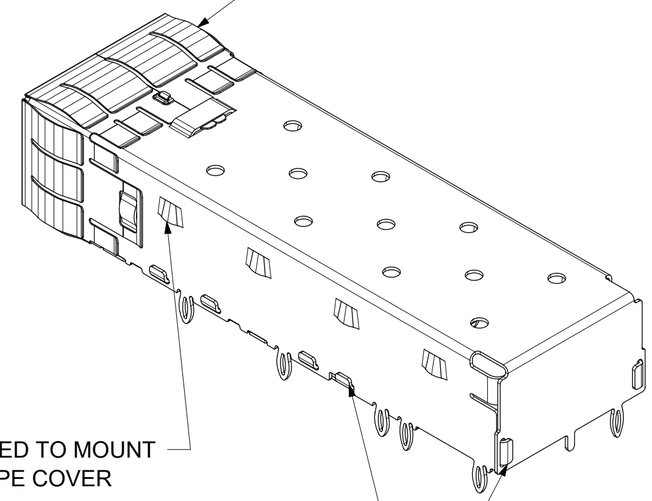

ONE PIECE DESIGN
SECURELY FASTENED

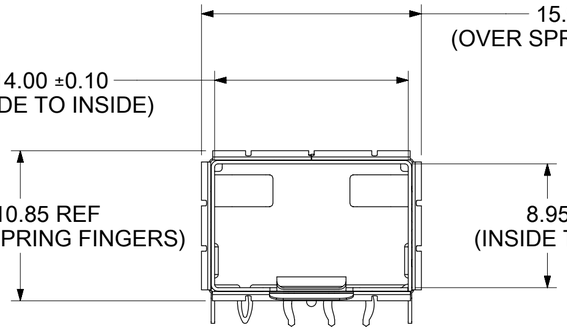

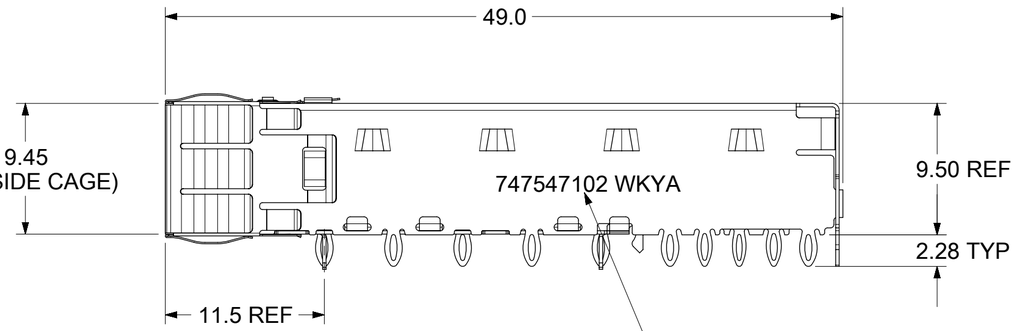

PART NO. AND WEEK/YEAR DATE CODE TO BE PRINTED ON THE
SIDE OF COMPLETED CAGE ASSEMBLY APPROXIMATELY AS SHOWN

MOLEX P/N	WELD POINT	WELD PACKAGING
747547102	NO	TRAY

NOTES:

1. MATERIAL:
   CAGE: 0.25mm THICK COPPER ALLOY, NICKEL PLATED
   SPRING FINGER: STAINLESS STEEL
2. PRESS FIT LEGS 2.28mm LONG:
   1.57 MINIMUM PCB THICKNESS FOR SINGLE SIDED USE
   3.00 MINIMUM PCB THICKNESS FOR BELLY TO BELLY USE
3. OPTIONAL LIGHT PIPE ASSEMBLY AVAILABLE
4. PORTS ARE DESIGNED FOR SFP+ TRANSCEIVERS AND ARE COMPATIBLE WITH SFP TRANSCEIVERS
5. NO RoHS EXEMPTIONS.

	WEEK/YEAR DATE CODE TABLE
WK	01 THRU 52 OR 53 EXAMPLE: 01 = FIRST WEEK OF YEAR 52 = LAST WEEK OF YEAR
YR	22, 23, 24 ETC. EXAMPLE: YEAR 2022 = 22

FUNCTIONAL SYMBOLS
FA = 0
FC = 0
FP = 0
DIVISIONAL SYMBOLS

THIS DRAWING CONTAINS INFORMATION THAT IS PROPRIETARY TO MOLEX ELECTRONIC TECHNOLOGIES, LLC AND SHOULD NOT BE USED WITHOUT WRITTEN PERMISSION

DIMENSION UNITS | SCALE 3:1

GENERAL TOLERANCES (UNLESS SPECIFIED)

ANGULAR TOL	±	1.0 °
4 PLACES	±	
3 PLACES	±	
2 PLACES	±	0.15
1 PLACE	±	0.25
0 PLACES	±	

DRAFT WHERE APPLICABLE MUST REMAIN WITHIN DIMENSIONS

CURRENT REV DESC: SEE REVISION TABLE

EC NO: 706897
DRWN: CHETHH2 2022/05/16
CHK'D: TKUMARKC 2022/05/18
APPR: SCHIEN 2022/05/19

INITIAL REVISION:
DRWN: CHETHH2 2022/05/16
APPR: SCHIEN 2022/05/19

molex

SFP+ 1X1 CAGE ASY, PRESS FIT, WITH
SUS EMI SPRING FINGERS

PRODUCT CUSTOMER DRAWING

DOCUMENT NUMBER	DOC TYPE	DOC PART	REVISION
747547102	PSD	ASY	A

THIRD ANGLE PROJECTION	DRAWING	SERIES	MATERIAL NUMBER	CUSTOMER	SHEET NUMBER
	C-SIZE	74754	747547102		1 OF 6

DOCUMENT STATUS	P1	RELEASE DATE	2022/05/19 07:40:26

FORMAT: master-tb-prod-C
REVISION: 21
DATE: 2021/05/01

PCB LAYOUT FOR SINGLE SIDE MOUNT

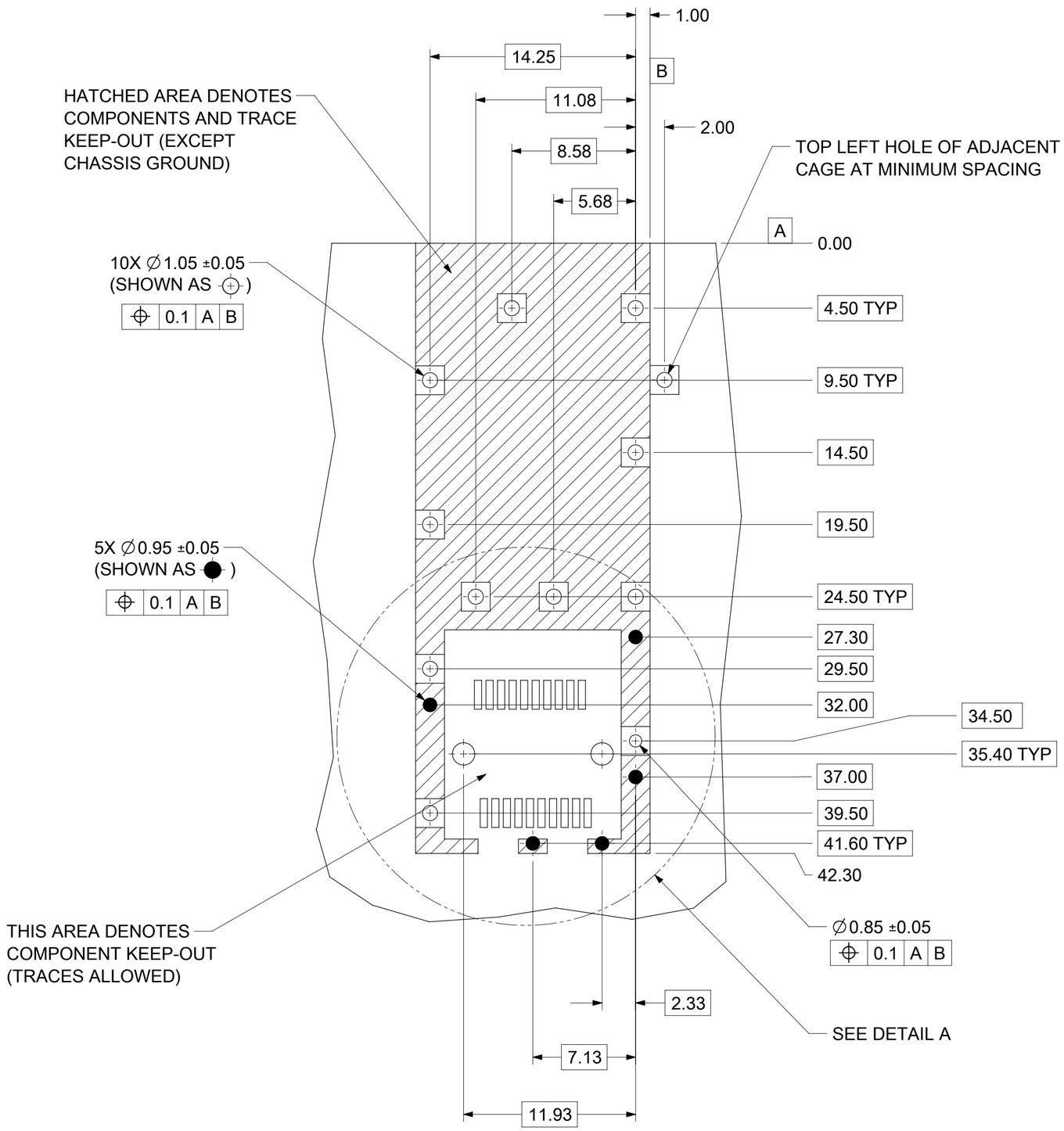

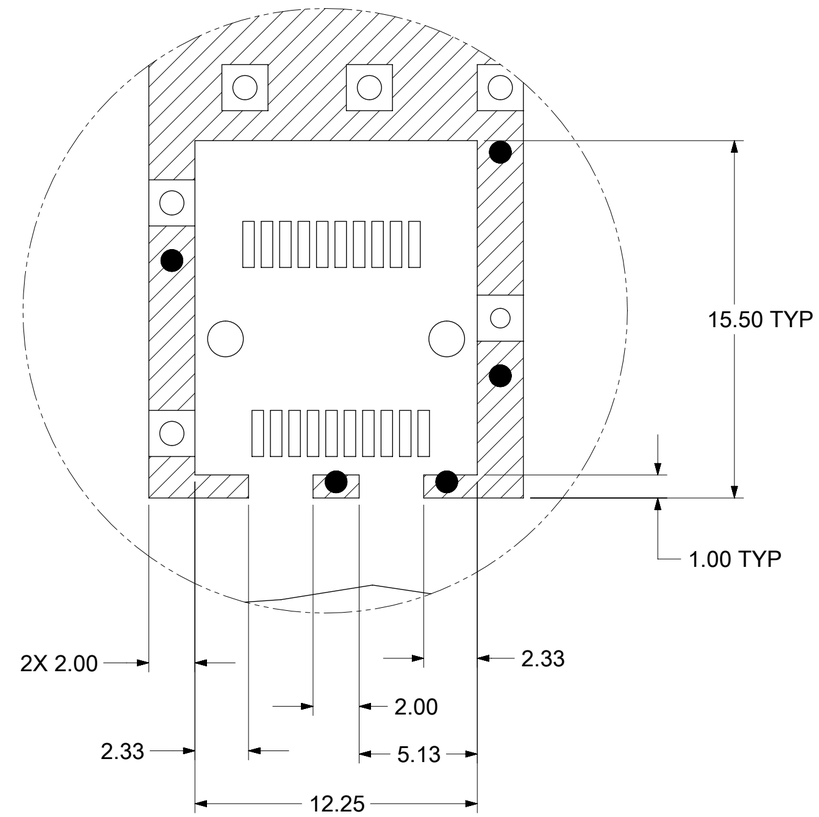

DETAIL A
SCALE 5:1
HOST CONNECTOR DETAIL

NOTES:
1. PADS AND VIAS CONNECT TO CHASSIS GROUND (RECOMMEND PADS TO BE 2.00mm SQUARE)
2. RECOMMEND THRU HOLE PLATING INCLUDES HASL, OSP, OR IMMERSION (GOLD, SILVER, OR TIN)
3. CONNECTOR PAD LAYOUT PER SFP+ MSA WILL ACCOMMODATE MOLEX CONNECTOR SERIES 74441 OR EQUIVALENT

DOCUMENT STATUS	P1	RELEASE DATE	2022/05/19 07:40:26

FUNCTIONAL SYMBOLS: FA = 0, FC = 0, FP = 0
DIVISIONAL SYMBOLS

THIS DRAWING CONTAINS INFORMATION THAT IS PROPRIETARY TO MOLEX ELECTRONIC TECHNOLOGIES, LLC AND SHOULD NOT BE USED WITHOUT WRITTEN PERMISSION

DIMENSION UNITS	SCALE
	4:1

GENERAL TOLERANCES (UNLESS SPECIFIED)

ANGULAR TOL	±	1.0 °
4 PLACES	±	
3 PLACES	±	
2 PLACES	±	0.15
1 PLACE	±	0.25
0 PLACES	±	

DRAFT WHERE APPLICABLE MUST REMAIN WITHIN DIMENSIONS

CURRENT REV DESC: SEE REVISION TABLE

EC NO: 706897
DRWN: CHETHH2 2022/05/16
CHK'D: TKUMARKC 2022/05/18
APPR: SCHIEN 2022/05/19

INITIAL REVISION:
DRWN: CHETHH2 2022/05/16
APPR: SCHIEN 2022/05/19

THIRD ANGLE PROJECTION | DRAWING: C-SIZE | SERIES: 74754

molex

SFP+ 1X1 CAGE ASY, PRESS FIT, WITH SUS EMI SPRING FINGERS

PRODUCT CUSTOMER DRAWING

DOCUMENT NUMBER	DOC TYPE	DOC PART	REVISION
747547102	PSD	ASY	A

MATERIAL NUMBER	CUSTOMER	SHEET NUMBER
747547102		2 OF 6

FORMAT: master-tb-prod-C
REVISION: J1
DATE: 2021/05/01

PCB LAYOUT FOR BELLY TO BELLY MOUNTING

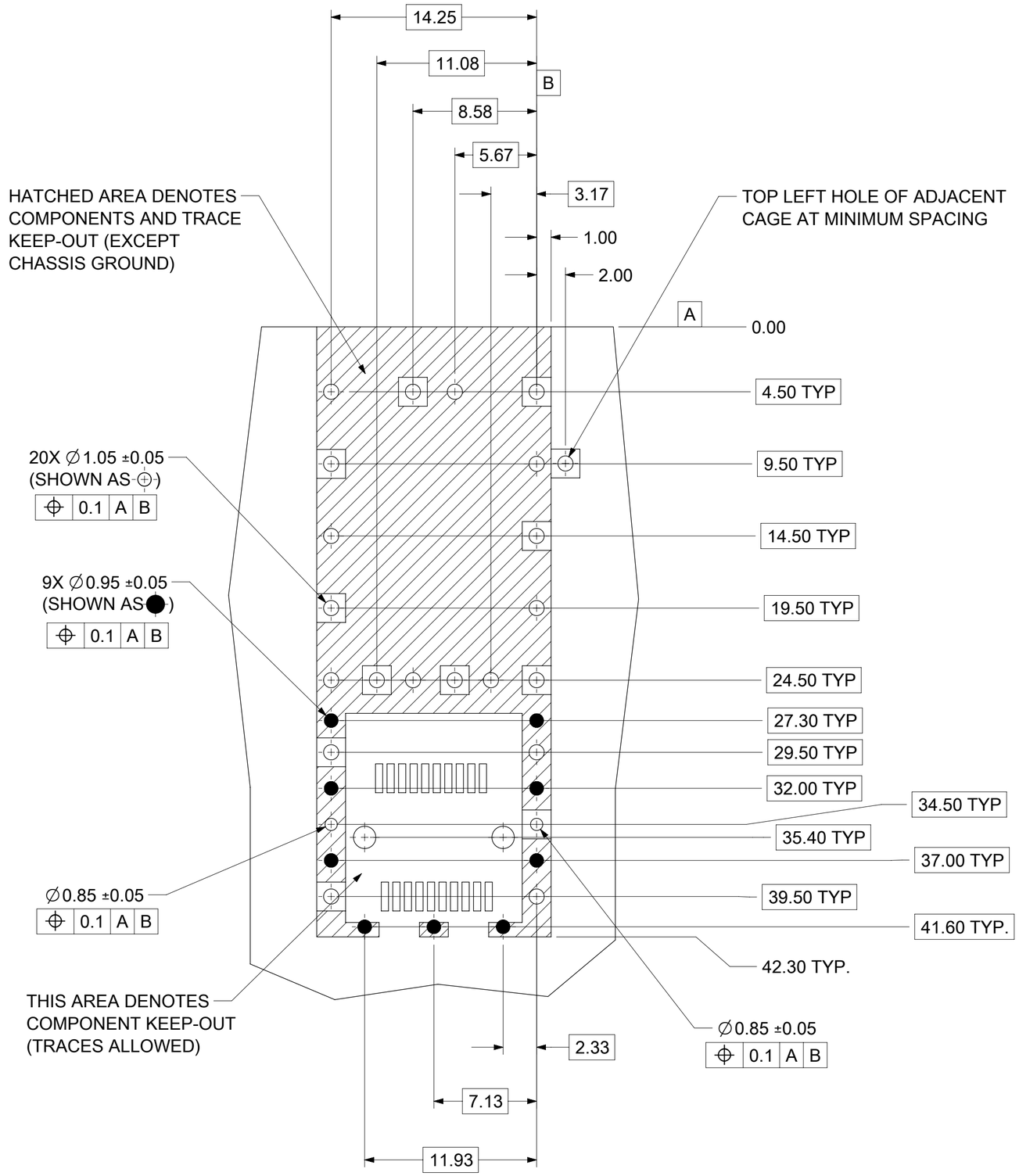

NOTE:
SEE SHEET 2 FOR
HOST CONNECTOR DETAIL

NOTES:
1. PADS AND VIAS CONNECT TO CHASSIS GROUND (RECOMMEND PADS TO BE 2.00mm SQUARE)
2. RECOMMENDED THRU HOLE PLATING INCLUDES HASL, OSP, OR IMMERSION (GOLD, SILVER, OR TIN).
3. CONNECTOR PAD LAYOUT PER SFP+ MSA WILL ACCOMMODATE MOLEX CONNECTOR SERIES 74441 OR EQUIVALENT.

DOCUMENT STATUS	P1	RELEASE DATE	2022/05/19 07:40:26

FUNCTIONAL SYMBOLS: FA = 0, FC = 0, FP = 0
DIVISIONAL SYMBOLS

THIS DRAWING CONTAINS INFORMATION THAT IS PROPRIETARY TO MOLEX ELECTRONIC TECHNOLOGIES, LLC AND SHOULD NOT BE USED WITHOUT WRITTEN PERMISSION

DIMENSION UNITS	SCALE
	4:1

GENERAL TOLERANCES (UNLESS SPECIFIED)

ANGULAR TOL	±	1.0 °
4 PLACES	±	
3 PLACES	±	
2 PLACES	±	0.15
1 PLACE	±	0.25
0 PLACES	±	

DRAFT WHERE APPLICABLE MUST REMAIN WITHIN DIMENSIONS

CURRENT REV DESC: SEE REVISION TABLE

EC NO: 706897
DRWN: CHETHH2 2022/05/16
CHK'D: TKUMARKC 2022/05/18
APPR: SCHIEN 2022/05/19

INITIAL REVISION:
DRWN: CHETHH2 2022/05/16
APPR: SCHIEN 2022/05/19

THIRD ANGLE PROJECTION | DRAWING: C-SIZE | SERIES: 74754

molex

SFP+ 1X1 CAGE ASY, PRESS FIT, WITH SUS EMI SPRING FINGERS

PRODUCT CUSTOMER DRAWING

DOCUMENT NUMBER	DOC TYPE	DOC PART	REVISION
747547102	PSD	ASY	A

MATERIAL NUMBER	CUSTOMER	SHEET NUMBER
747547102		3 OF 6

FORMAT: master-tb-prod-C
REVISION: J1
DATE: 2021/05/01

BEZEL AND BOARD POSITION DIMENSIONS FOR SINGLE SIDE MOUNTING (CAGE WITH SPRING FINGER)

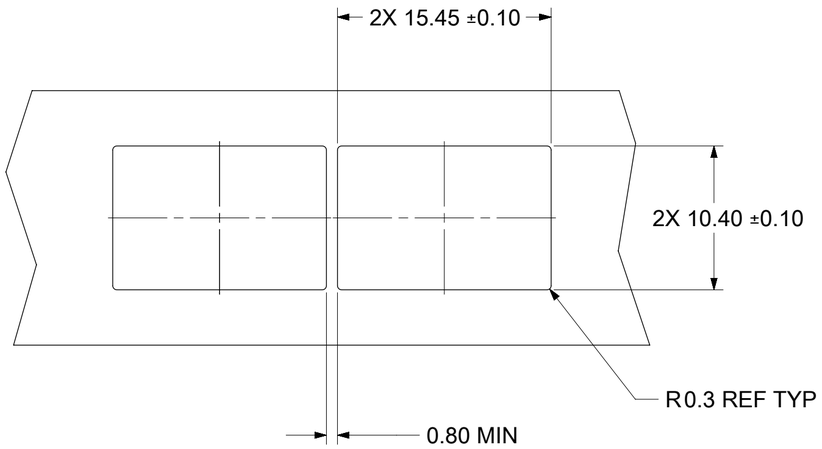

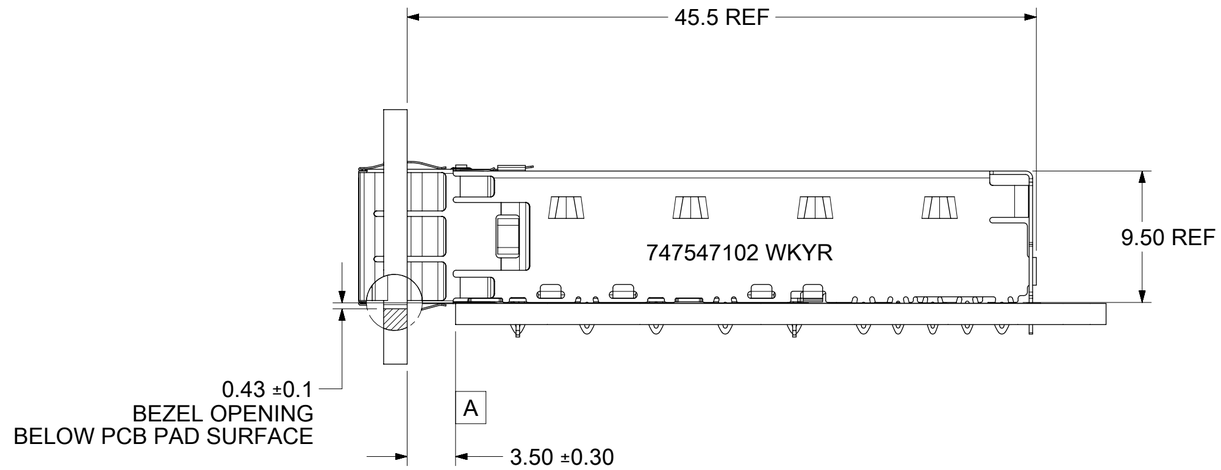

BEZEL AND BOARD POSITION DIMENSIONS FOR BELLY TO BELLY MOUNTING (CAGE WITH SPRING FINGER)

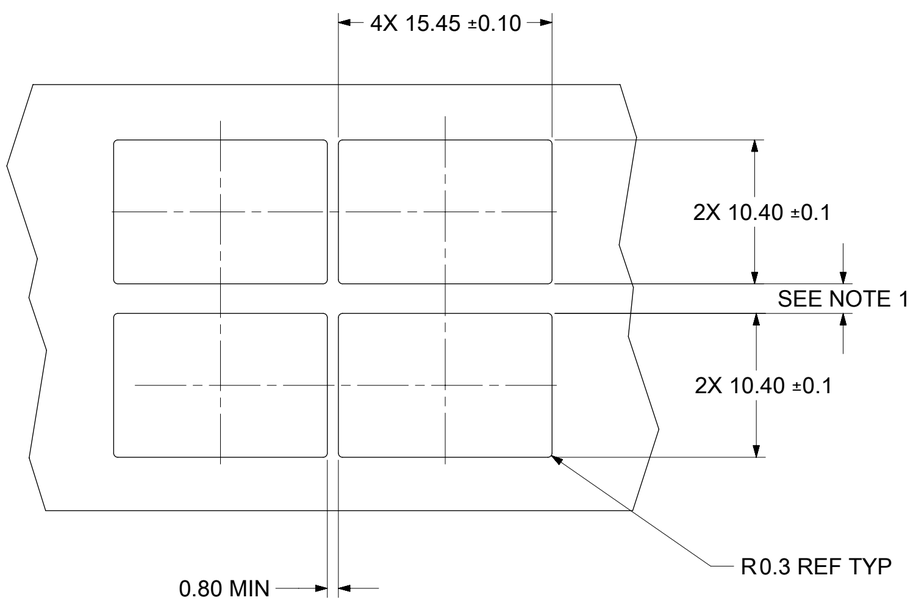

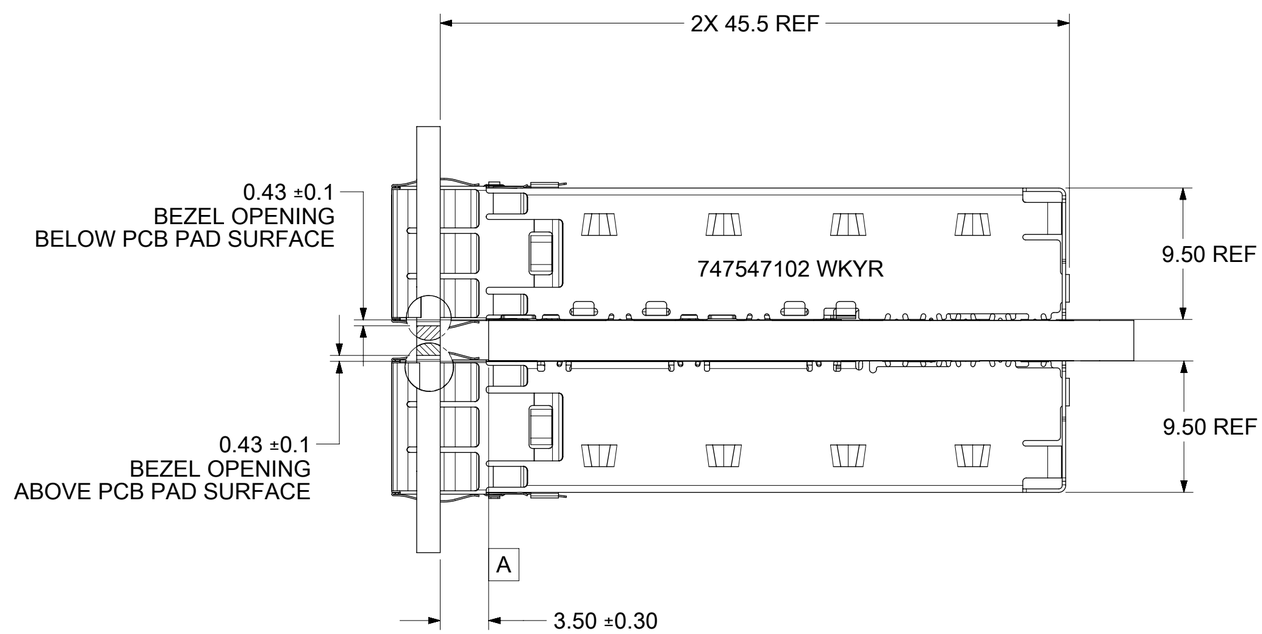

NOTES:

1. PCB THICKNESS VARIATION MUST BE CONSIDERED WHEN DETERMINING BEZEL OPENING SIZE AND LOCATION

DOCUMENT STATUS	P1	RELEASE DATE	2022/05/19 07:40:26

FUNCTIONAL SYMBOLS	THIS DRAWING CONTAINS INFORMATION THAT IS PROPRIETARY TO MOLEX ELECTRONIC TECHNOLOGIES, LLC AND SHOULD NOT BE USED WITHOUT WRITTEN PERMISSION								
FA = 0	DIMENSION UNITS	SCALE 3:1	CURRENT REV DESC: SEE REVISION TABLE				molex		
FC = 0	GENERAL TOLERANCES (UNLESS SPECIFIED)						SFP+ 1X1 CAGE ASY, PRESS FIT, WITH SUS EMI SPRING FINGERS		
FP = 0	ANGULAR TOL	± 1.0 °	EC NO: 706897						
	4 PLACES	±	DRWN: CHETHH2	2022/05/16					
DIVISIONAL SYMBOLS	3 PLACES	±	CHK'D: TKUMARKC	2022/05/18			PRODUCT CUSTOMER DRAWING		
	2 PLACES	± 0.15	APPR: SCHIEN	2022/05/19			DOCUMENT NUMBER	DOC TYPE / DOC PART	REVISION
	1 PLACE	± 0.25	INITIAL REVISION:				747547102	PSD / ASY	A
	0 PLACES	±	DRWN: CHETHH2	2022/05/16					
	DRAFT WHERE APPLICABLE MUST REMAIN WITHIN DIMENSIONS		APPR: SCHIEN	2022/05/19					
			THIRD ANGLE PROJECTION	DRAWING	SERIES		MATERIAL NUMBER	CUSTOMER	SHEET NUMBER
				C-SIZE	74754		747547102		4 OF 6

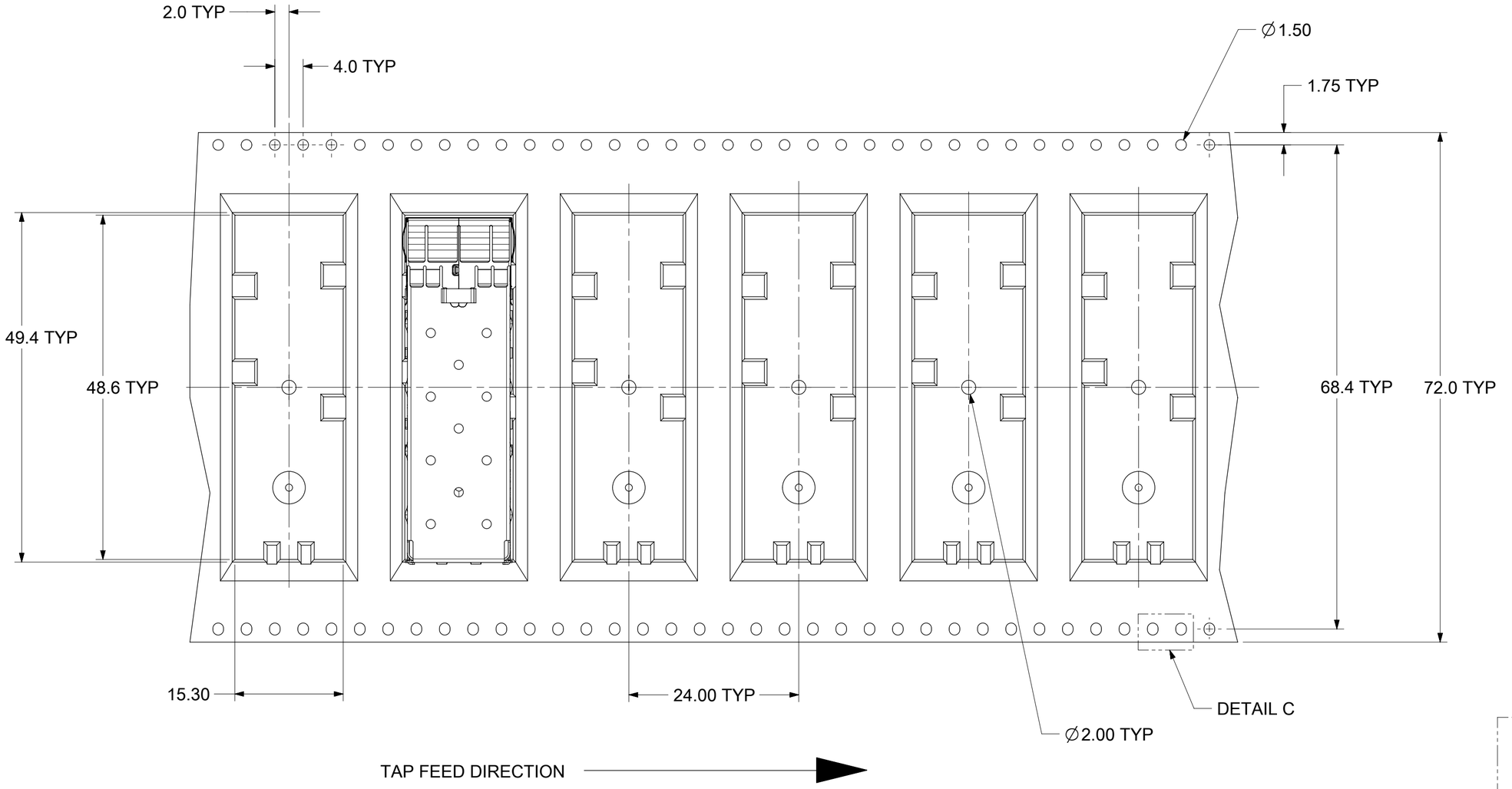

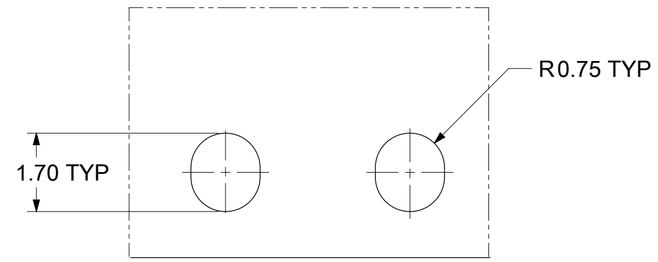

DETAIL C
SCALE 10:1

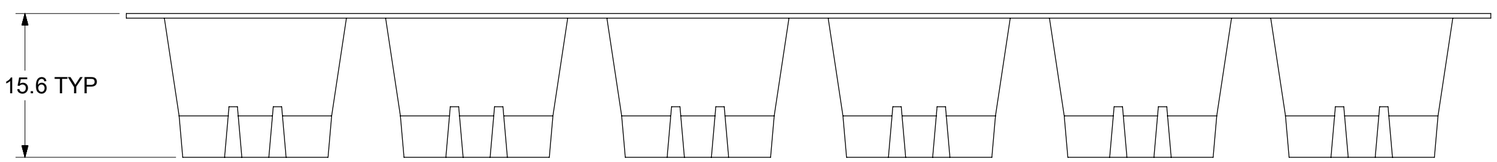

THIS DRAWING CONTAINS INFORMATION THAT IS PROPRIETARY TO MOLEX ELECTRONIC TECHNOLOGIES, LLC AND SHOULD NOT BE USED WITHOUT WRITTEN PERMISSION

FUNCTIONAL SYMBOLS	FA = 0, FC = 0, FP = 0
DIVISIONAL SYMBOLS	
DIMENSION UNITS	
SCALE	2:1
GENERAL TOLERANCES (UNLESS SPECIFIED)	
ANGULAR TOL	± 1.0 °
4 PLACES	±
3 PLACES	±
2 PLACES	± 0.15
1 PLACE	± 0.25
0 PLACES	±
DRAFT WHERE APPLICABLE MUST REMAIN WITHIN DIMENSIONS	

CURRENT REV DESC: SEE REVISION TABLE

EC NO:	706897	
DRWN:	CHETHH2	2022/05/16
CHK'D:	TKUMARKC	2022/05/18
APPR:	SCHIEN	2022/05/19

INITIAL REVISION:

DRWN:	CHETHH2	2022/05/16
APPR:	SCHIEN	2022/05/19

THIRD ANGLE PROJECTION | DRAWING: C-SIZE | SERIES: 74754

molex

SFP+ 1X1 CAGE ASY, PRESS FIT, WITH SUS EMI SPRING FINGERS

PRODUCT CUSTOMER DRAWING

DOCUMENT NUMBER	DOC TYPE	DOC PART	REVISION
747547102	PSD	ASY	A

MATERIAL NUMBER	CUSTOMER	SHEET NUMBER
747547102		5 OF 6

DOCUMENT STATUS	P1	RELEASE DATE	2022/05/19 07:40:26

FORMAT: master-tb-prod-C
REVISION: J1
DATE: 2021/05/21

REV	DATE	DESCRIPTION
A	2022/05/16	INITIAL RELEASE

THIS DRAWING CONTAINS INFORMATION THAT IS PROPRIETARY TO MOLEX ELECTRONIC TECHNOLOGIES, LLC AND SHOULD NOT BE USED WITHOUT WRITTEN PERMISSION

FUNCTIONAL SYMBOLS
FA = 0
FC = 0
FP = 0

DIVISIONAL SYMBOLS

DIMENSION UNITS	SCALE
	1:1

GENERAL TOLERANCES (UNLESS SPECIFIED)

ANGULAR TOL	±	1.0 °
4 PLACES	±	
3 PLACES	±	
2 PLACES	±	0.15
1 PLACE	±	0.25
0 PLACES	±	

DRAFT WHERE APPLICABLE MUST REMAIN WITHIN DIMENSIONS

CURRENT REV DESC: SEE REVISION TABLE

EC NO: 706897
DRWN: CHETHH2 2022/05/16
CHK'D: TKUMARKC 2022/05/18
APPR: SCHIEN 2022/05/19

INITIAL REVISION:
DRWN: CHETHH2 2022/05/16
APPR: SCHIEN 2022/05/19

THIRD ANGLE PROJECTION

DRAWING	SERIES
C-SIZE	74754

molex

SFP+ 1X1 CAGE ASY, PRESS FIT, WITH SUS EMI SPRING FINGERS

PRODUCT CUSTOMER DRAWING

DOCUMENT NUMBER	DOC TYPE	DOC PART	REVISION
747547102	PSD	ASY	A

MATERIAL NUMBER	CUSTOMER	SHEET NUMBER
747547102		6 OF 6

DOCUMENT STATUS	P1	RELEASE DATE	2022/05/19 07:40:26

FORMAT: master-tb-prod-C
REVISION: 21
DATE: 2021/05/01

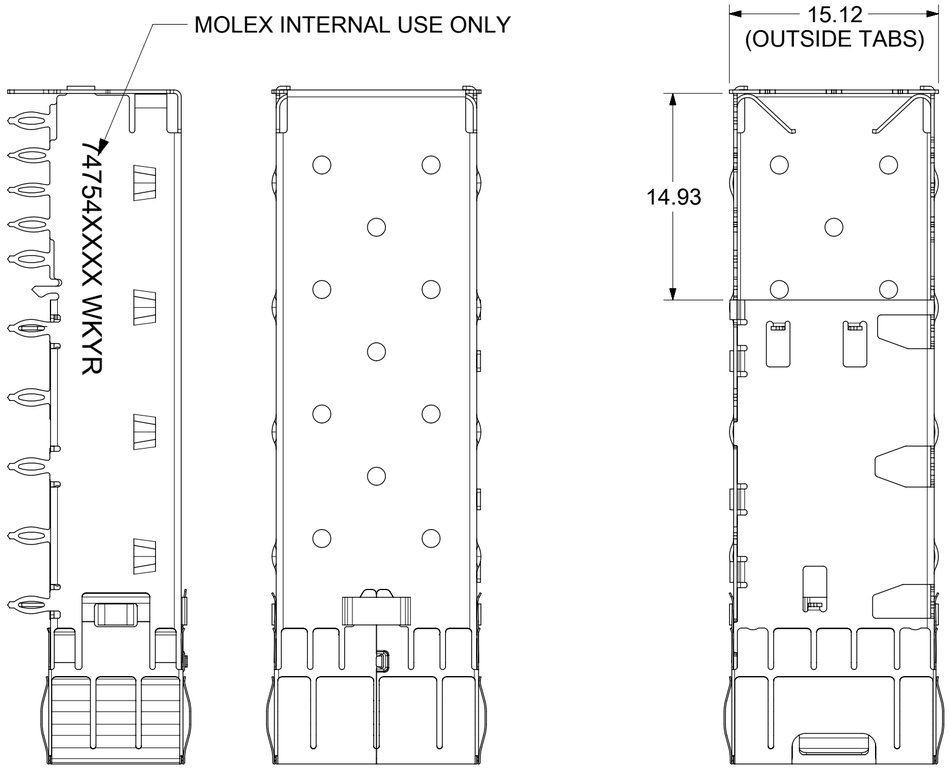

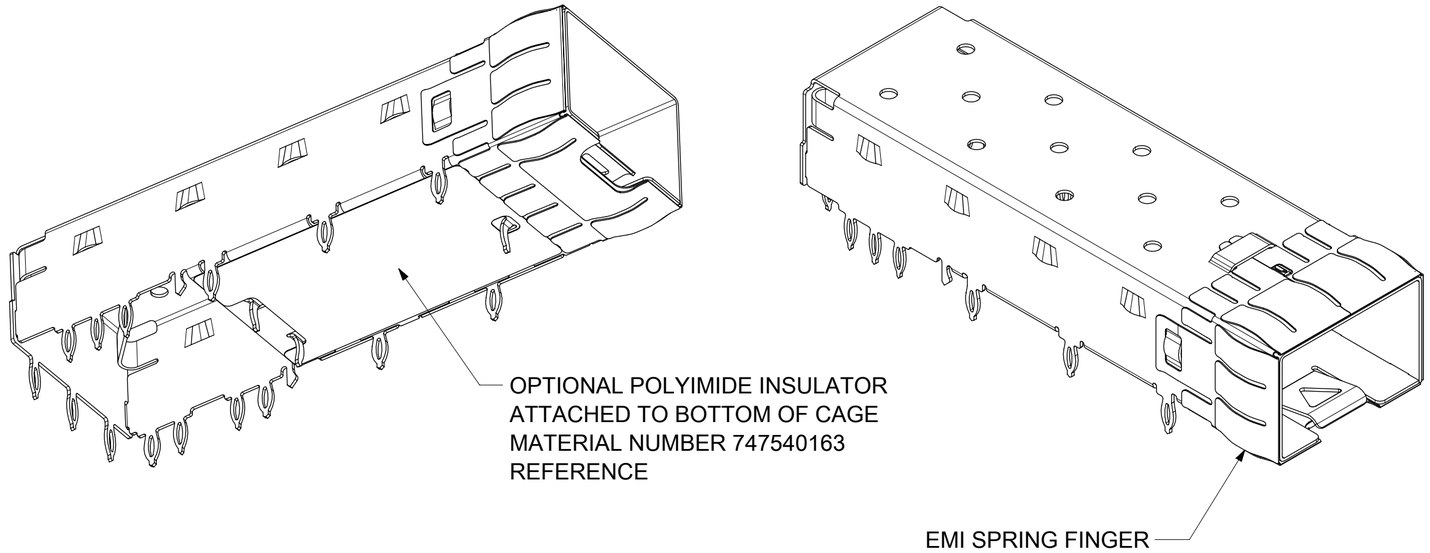

SFP+ 1X1 CAGE			
PART NO.	WELD POINT QUANTITY	PACKAGING	PLATING
747548101	0	TRAY	NICKEL
747548108	6	TRAY	NICKEL
747548109	0	TAPE & REEL	NICKEL

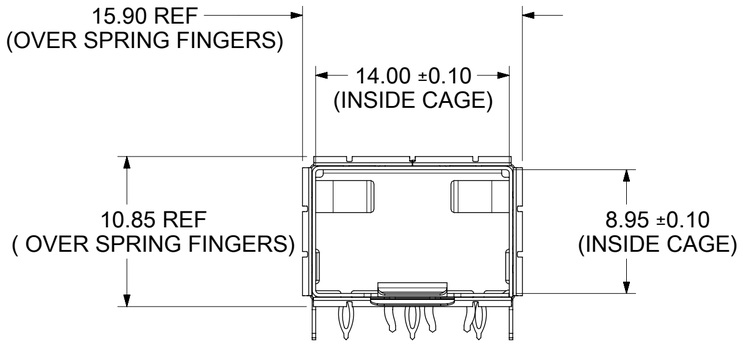

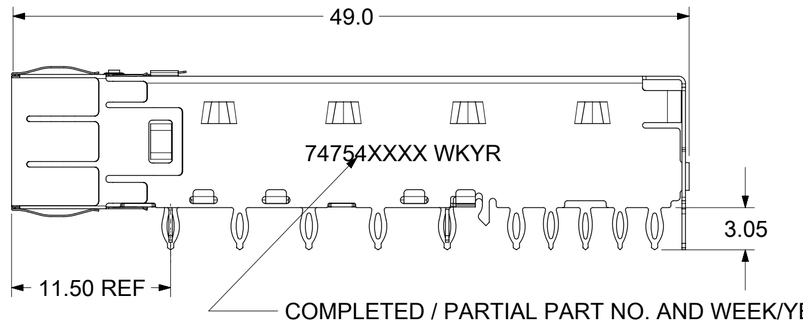

COMPLETED / PARTIAL PART NO. AND WEEK/YEAR DATE CODE TO BE PRINTED / STAMPED ON THE SIDE OF COMPLETED CAGE ASSEMBLY APPROXIMATELY AS SHOWN.

WEEK/YEAR DATE CODE TABLE	
WK	01 THRU 52 OR 53 EXAMPLE: 01 = FIRST WEEK OF YEAR 52 = LAST WEEK OF YEAR
YR	22, 23, 24 ETC. EXAMPLE: YEAR 2022 = 22

NOTES:

1. MATERIAL:
   CAGE: COPPER ALLOY, THICKNESS 0.25mm, PLATING REFER TO TABLE.
   SPRING FINGER: STAINLESS STEEL
2. PRESS FIT LEGS 3.05 LONG -
   1.57 MINIMUM PCB THICKNESS FOR SINGLE SIDED USE
3. OPTIONAL LIGHT PIPE ASSEMBLY AVAILABLE
4. PORTS ARE DESIGNED FOR SFP+ TRANSCEIVERS AND ARE BACKWARDS COMPATIBLE WITH SFP TRANCEIVERS
5. NO RoHS EXEMPTIONS

THIS DRAWING CONTAINS INFORMATION THAT IS PROPRIETARY TO MOLEX ELECTRONIC TECHNOLOGIES, LLC AND SHOULD NOT BE USED WITHOUT WRITTEN PERMISSION

DIMENSION UNITS	SCALE
mm	3:1

GENERAL TOLERANCES (UNLESS SPECIFIED)

ANGULAR TOL	±	0.5 °
4 PLACES	±	
3 PLACES	±	
2 PLACES	±	0.13
1 PLACE	±	0.25
0 PLACES	±	

DRAFT WHERE APPLICABLE MUST REMAIN WITHIN DIMENSIONS

CURRENT REV DESC:

EC NO: 707665
DRWN: TKUMARKC 2022/05/31
CHK'D: TKUMARKC 2022/06/13
APPR: SCHIEN 2022/06/16

INITIAL REVISION:
DRWN: CHETHH2 2022/05/16
APPR: SCHIEN 2022/05/19

molex

SFP+ 1X1 CAGE ASSY PRESS FIT TYPE, WITH SUS EMI SPRING FINGERS

PRODUCT CUSTOMER DRAWING

DOCUMENT NUMBER	DOC TYPE	DOC PART	REVISION
747548101	PSD	ASY	B

THIRD ANGLE PROJECTION	DRAWING	SERIES	MATERIAL NUMBER	CUSTOMER	SHEET NUMBER
	C-SIZE	74754	SEE P/N TABLE		1 OF 5

DOCUMENT STATUS	P1	RELEASE DATE	2022/06/16 10:32:47

FORMAT: master-tb-prod-C
REVISION: 21
DATE: 2021/05/01

PCB LAYOUT FOR SINGLE SIDE MOUNT

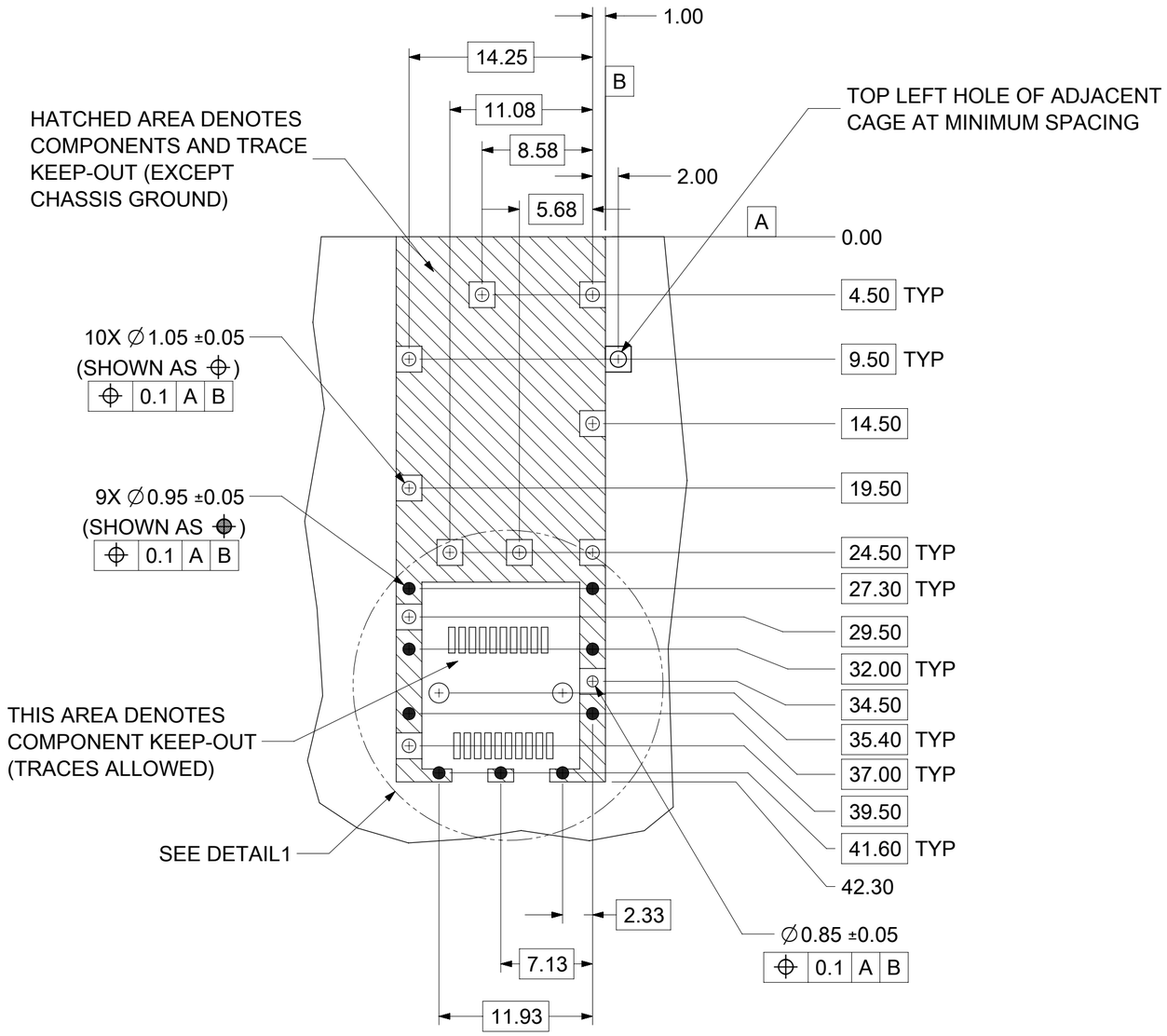

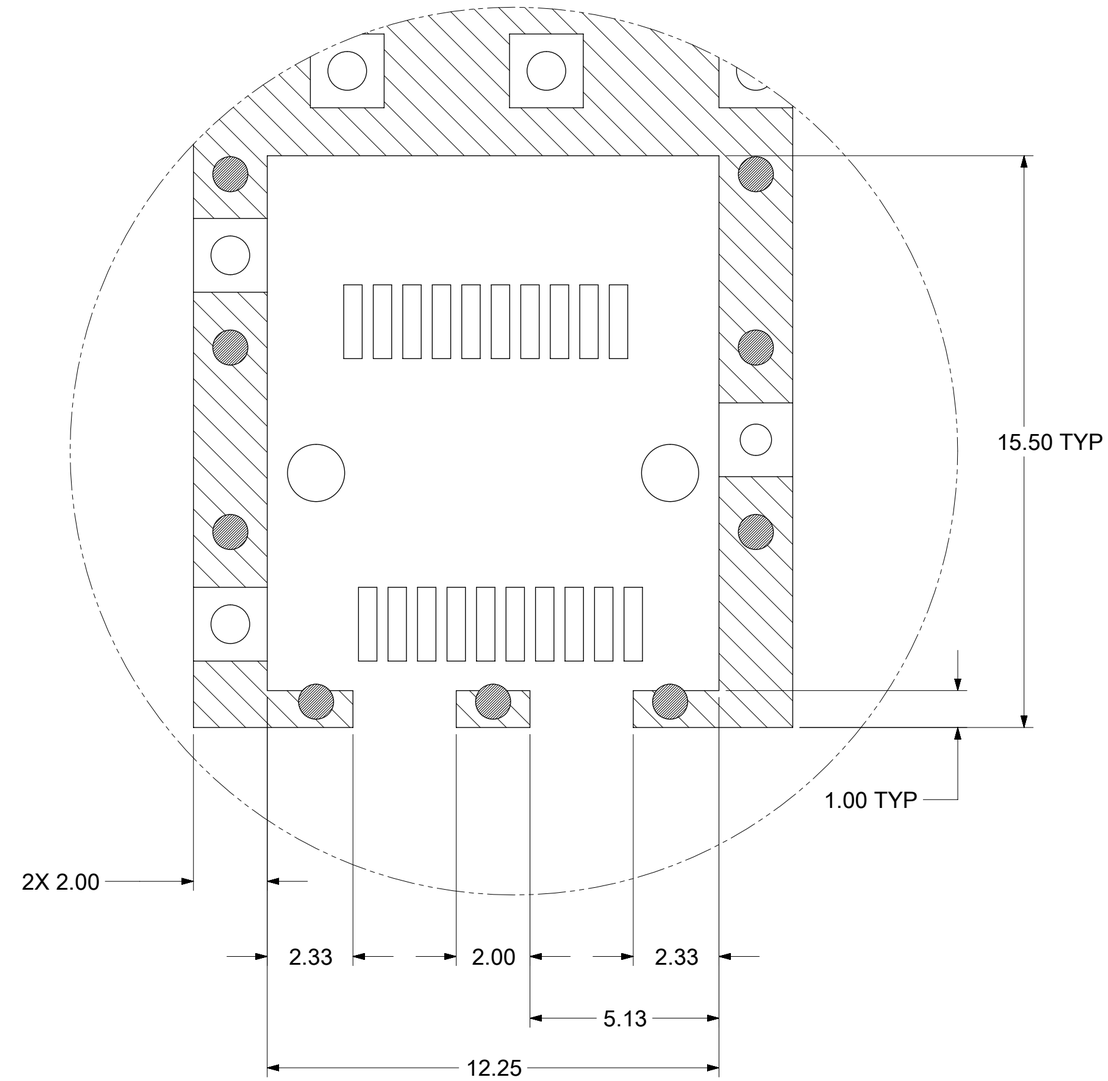

DETAIL 1
SCALE 8:1
HOST CONNECTOR DETAIL

NOTES:
1. PADS AND VIAS CONNECT TO CHASSIS GROUND (RECOMMEND PADS TO BE 2.00mm SQUARE)
2. RECOMMENDED THRU HOLE PLATING INCLUDES HASL, OSP, OR IMMERSION (GOLD, SILVER, OR TIN).
3. CONNECTOR PAD LAYOUT PER SFP+ MSA WILL ACCOMMODATE MOLEX CONNECTOR SERIES 74441 OR EQUIVALENT.

THIS DRAWING CONTAINS INFORMATION THAT IS PROPRIETARY TO MOLEX ELECTRONIC TECHNOLOGIES, LLC AND SHOULD NOT BE USED WITHOUT WRITTEN PERMISSION

DIMENSION UNITS	SCALE
mm	3:1

GENERAL TOLERANCES (UNLESS SPECIFIED)

ANGULAR TOL	±	0.5 °
4 PLACES	±	
3 PLACES	±	
2 PLACES	±	0.13
1 PLACE	±	0.25
0 PLACES	±	

DRAFT WHERE APPLICABLE MUST REMAIN WITHIN DIMENSIONS

CURRENT REV DESC:

EC NO: 707665
DRWN: TKUMARKC 2022/05/31
CHK'D: TKUMARKC 2022/06/13
APPR: SCHIEN 2022/06/16

INITIAL REVISION:
DRWN: CHETHH2 2022/05/16
APPR: SCHIEN 2022/05/19

THIRD ANGLE PROJECTION | DRAWING: C-SIZE | SERIES: 74754

molex

SFP+ 1X1 CAGE ASSY PRESS FIT TYPE, WITH SUS EMI SPRING FINGERS

PRODUCT CUSTOMER DRAWING

DOCUMENT NUMBER	DOC TYPE	DOC PART	REVISION
747548101	PSD	ASY	B

MATERIAL NUMBER	CUSTOMER	SHEET NUMBER
SEE P/N TABLE		2 OF 5

DOCUMENT STATUS	P1	RELEASE DATE	2022/06/16 10:32:47

FORMAT: master-tb-prod-C
REVISION: J1
DATE: 2021/05/01

APPLIES FOR 747548109

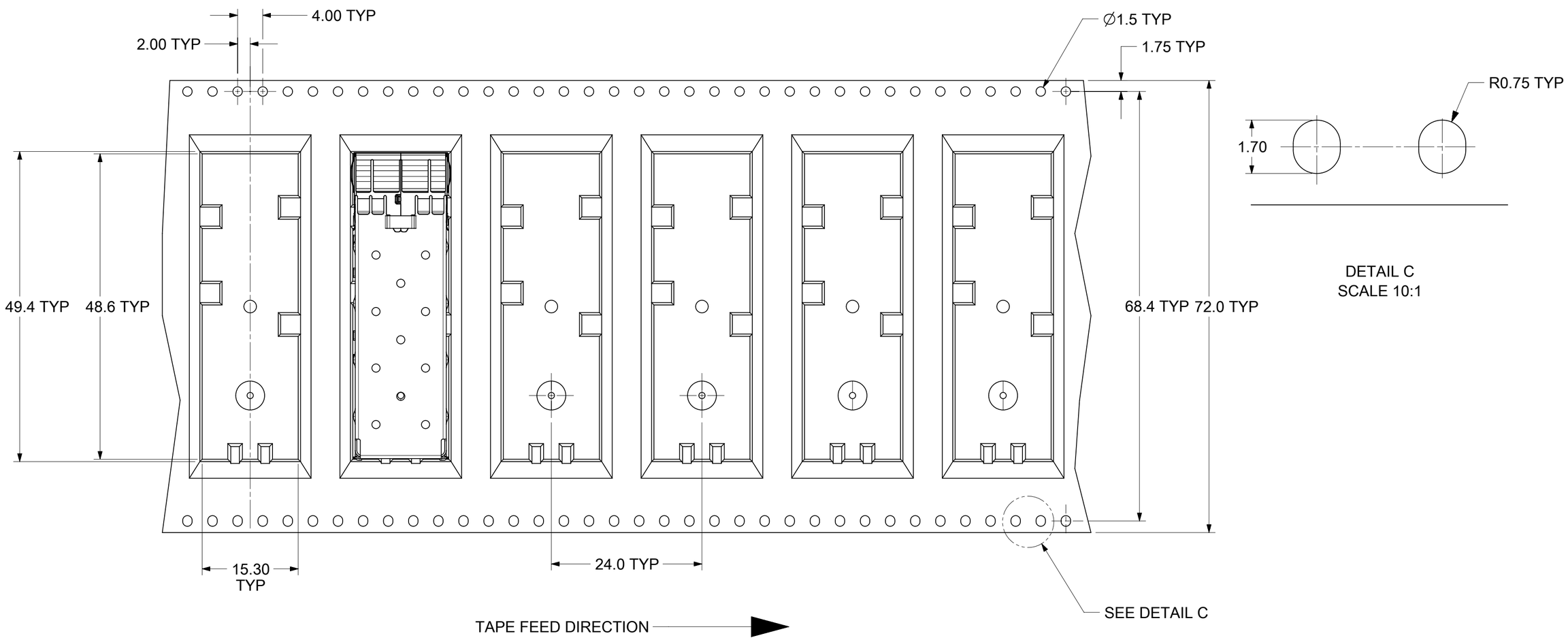

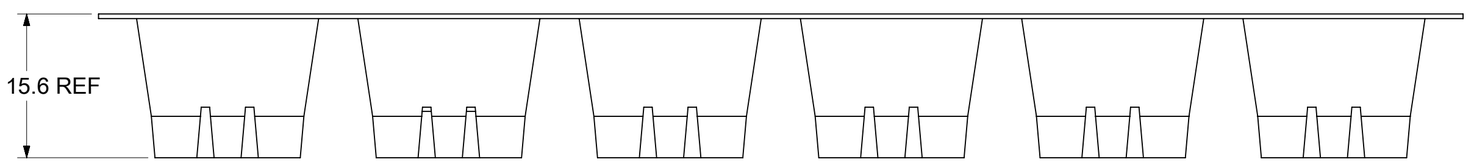

THIS DRAWING CONTAINS INFORMATION THAT IS PROPRIETARY TO MOLEX ELECTRONIC TECHNOLOGIES, LLC AND SHOULD NOT BE USED WITHOUT WRITTEN PERMISSION

DIMENSION UNITS	SCALE
mm	2:1

GENERAL TOLERANCES (UNLESS SPECIFIED)

ANGULAR TOL	±	0.5 °
4 PLACES	±	
3 PLACES	±	
2 PLACES	±	0.13
1 PLACE	±	0.25
0 PLACES	±	

DRAFT WHERE APPLICABLE MUST REMAIN WITHIN DIMENSIONS

CURRENT REV DESC:

EC NO: 707665
DRWN: TKUMARKC 2022/05/31
CHK'D: TKUMARKC 2022/06/13
APPR: SCHIEN 2022/06/16

INITIAL REVISION:
DRWN: CHETHH2 2022/05/16
APPR: SCHIEN 2022/05/19

molex

SFP+ 1X1 CAGE ASSY PRESS FIT TYPE, WITH SUS EMI SPRING FINGERS

PRODUCT CUSTOMER DRAWING

DOCUMENT NUMBER	DOC TYPE	DOC PART	REVISION
747548101	PSD	ASY	B

THIRD ANGLE PROJECTION	DRAWING	SERIES	MATERIAL NUMBER	CUSTOMER	SHEET NUMBER
	C-SIZE	74754	SEE P/N TABLE		3 OF 5

DOCUMENT STATUS	P1	RELEASE DATE	2022/06/16 10:32:47

FORMAT: master-tb-prod-C
REVISION: J1
DATE: 2021/05/21

BEZEL AND BOARD POSITION DIMENSIONS FOR SINGLE SIDE MOUNTING (SPRING FINGER)

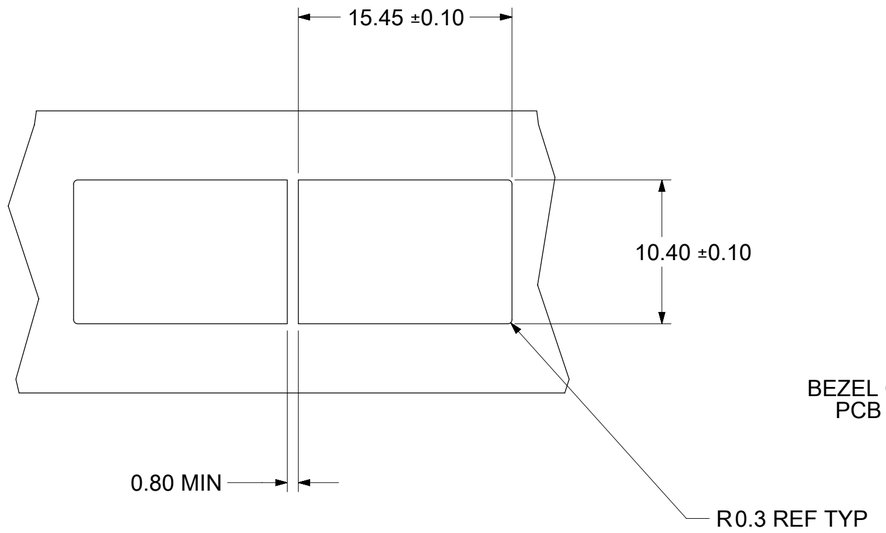

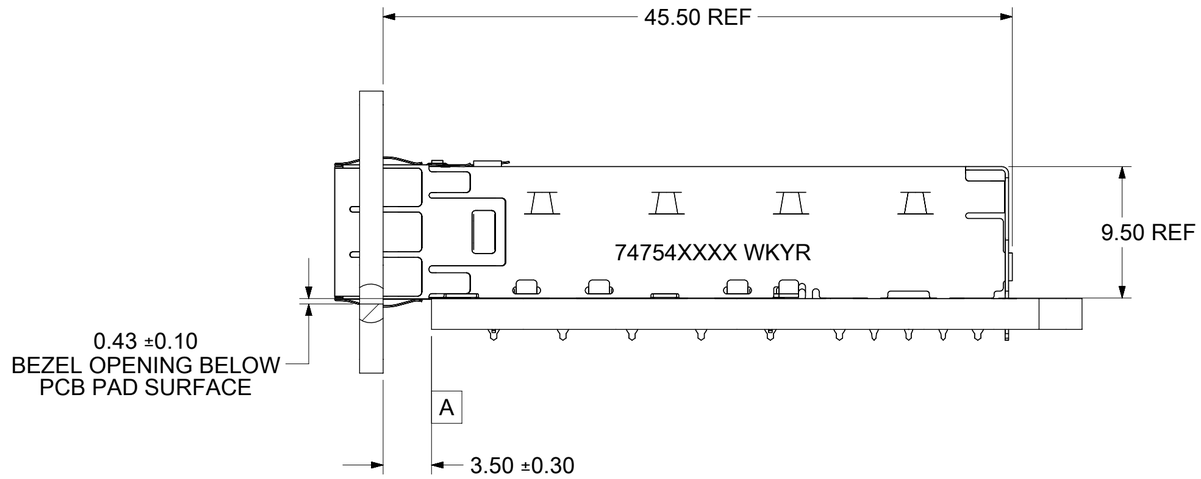

THIS DRAWING CONTAINS INFORMATION THAT IS PROPRIETARY TO MOLEX ELECTRONIC TECHNOLOGIES, LLC AND SHOULD NOT BE USED WITHOUT WRITTEN PERMISSION

DIMENSION UNITS	SCALE
mm	3:1

GENERAL TOLERANCES (UNLESS SPECIFIED)

ANGULAR TOL	±	0.5 °
4 PLACES	±	
3 PLACES	±	
2 PLACES	±	0.13
1 PLACE	±	0.25
0 PLACES	±	

DRAFT WHERE APPLICABLE MUST REMAIN WITHIN DIMENSIONS

CURRENT REV DESC:

EC NO: 707665
DRWN: TKUMARKC 2022/05/31
CHK'D: TKUMARKC 2022/06/13
APPR: SCHIEN 2022/06/16

INITIAL REVISION:
DRWN: CHETHH2 2022/05/16
APPR: SCHIEN 2022/05/19

THIRD ANGLE PROJECTION | DRAWING: C-SIZE | SERIES: 74754

molex

SFP+ 1X1 CAGE ASSY PRESS FIT TYPE, WITH SUS EMI SPRING FINGERS

PRODUCT CUSTOMER DRAWING

DOCUMENT NUMBER	DOC TYPE	DOC PART	REVISION
747548101	PSD	ASY	B

MATERIAL NUMBER	CUSTOMER	SHEET NUMBER
SEE P/N TABLE		4 OF 5

DOCUMENT STATUS	P1	RELEASE DATE	2022/06/16 10:32:47

FORMAT: master-tb-prod-C
REVISION: 21
DATE: 2021/05/01

REV	DATE	DESCRIPTION
A	2022/05/16	INITIAL RELEASE
B	2022/05/31	SHEET 1: ADDED NEW PART NUMBER 747548109 TO P/N TABLE. SHEET 3: ADDED A SHEET TO SHOW TAPE AND REEL PACKAGING.

THIS DRAWING CONTAINS INFORMATION THAT IS PROPRIETARY TO MOLEX ELECTRONIC TECHNOLOGIES, LLC AND SHOULD NOT BE USED WITHOUT WRITTEN PERMISSION

DIMENSION UNITS	SCALE
mm	1:1

GENERAL TOLERANCES (UNLESS SPECIFIED)

ANGULAR TOL	±	0.5 °
4 PLACES	±	
3 PLACES	±	
2 PLACES	±	0.13
1 PLACE	±	0.25
0 PLACES	±	

DRAFT WHERE APPLICABLE MUST REMAIN WITHIN DIMENSIONS

CURRENT REV DESC:

EC NO: 707665
DRWN: TKUMARKC 2022/05/31
CHK'D: TKUMARKC 2022/06/13
APPR: SCHIEN 2022/06/16

INITIAL REVISION:
DRWN: CHETHH2 2022/05/16
APPR: SCHIEN 2022/05/19

THIRD ANGLE PROJECTION | DRAWING: C-SIZE | SERIES: 74754

molex

SFP+ 1X1 CAGE ASSY PRESS FIT TYPE, WITH SUS EMI SPRING FINGERS

PRODUCT CUSTOMER DRAWING

DOCUMENT NUMBER	DOC TYPE	DOC PART	REVISION
747548101	PSD	ASY	B

MATERIAL NUMBER	CUSTOMER	SHEET NUMBER
SEE P/N TABLE		5 OF 5

DOCUMENT STATUS	P1	RELEASE DATE	2022/06/16 10:32:47