L600 PCB SERIES MIDGET (10x38 mm) FUSE HOLDER

600 V



Description

The PC board-mounted midget fuse holder is a one-piece holder designed to provide a more robust and secure solution. It offers a smaller footprint and flexible mounting options.

For use with Midget-style fuses and fuse covers, it is UL Recognized and can be covered for additional protection.

Features/Benefits

- Through hole PCB mounting
- Robust and secure block design
- All-in-one package offers easy installation
- Space saving footprint
- Touch Safe cover/puller available
- 3-pole configurations

Applications

- HVAC market
- Industrial manufacturing
- Mass production facilities

SPL001PCB Cover Dimensions mm (inches)

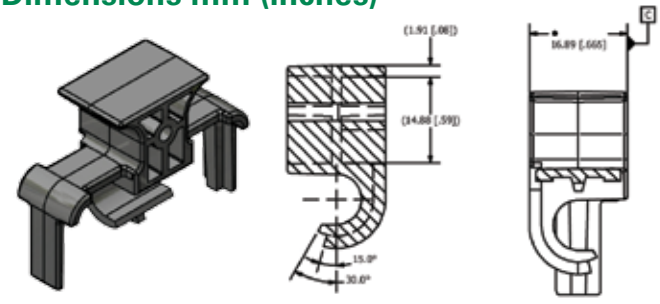

Specifications

Voltage Rating	600 VAC/600 VDC
Amperage Rating	30 A
Approval	UL Recognized (File: E14721)
Mounting Method	Through hole solder/PCB

Ordering Information

	CATALOG NUMBER	ORDERING NUMBER
Block	L60030M3PCB	L60030M3PCB
Cover*	SPL001PCB	SPL0001PCBT

*Covers are single pole—need to order a quantity of 3 for each block.

Recommended Fuses

Midget (10 x 38 mm) series

Web Resources

For additional technical information visit:
Littelfuse.com/fuseblocks

Dimensions mm (inches)

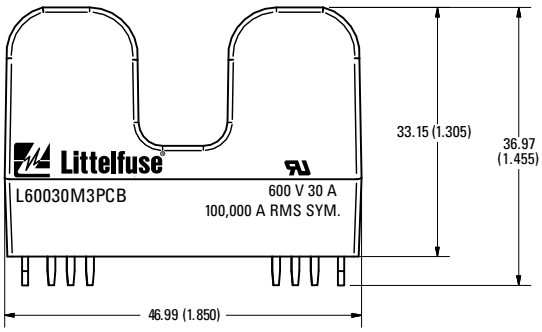

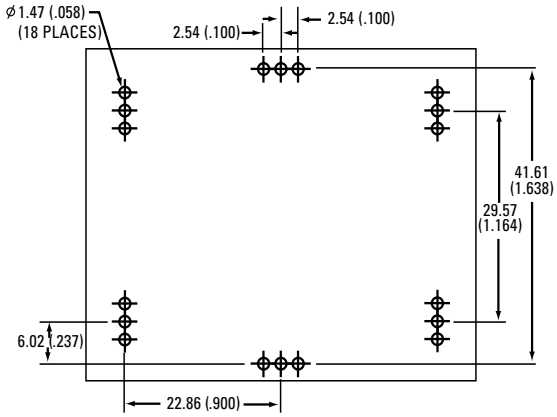

© 2013 Littelfuse POWR-GARD® Products