UM11397

TEA2017DB1580 240 W demo board

Rev. 1 — 24 February 2022 User manual

Document information

Information	Content
Keywords	TEA2017DB1580, 240 W, 12 V x 20 A, PFC, CCM, LLC, resonant, controller, converter, burst mode, power supply, demo board, programmable settings, I2C
Abstract	The TEA2017AAT is a controller IC for resonant power supplies that include a PFC. It provides high efficiency at all power levels. Together with the TEA2095T dual LLC resonant SR controller, a high performance cost-effective resonant power supply can be made. To reach a high efficiency at all power levels, the TEA2017AAT provides a low-power operation mode (LP) and extensive burst mode configuration options. Parameter settings in an internal multiple times programmable memory can define operation modes and protections. For product development, an IC version is available to make set power good signal. Protections can be configured to provide the correct handling. The efficiency at high power levels is well above 90 %. No-load power consumption is below 100 mW. At 250 mW output power, the input power is well below 500 mW for easily meeting the EUP lot6 standby requirement. The TEA2017DB1580 board shows a single output (12 V) desktop PC application that needs forced cooling (by fan) at high output power (above 120 W)

Revision history

Rev	Date	Description
v.1	20220224	Initial version

All information provided in this document is subject to legal disclaimers.

© NXP B.V. 2022. All rights reserved.

1 Introduction

WARNING

Lethal voltage and fire ignition hazard

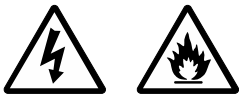

The non-insulated high voltages that are present when operating this product, constitute a risk of electric shock, personal injury, death and/or ignition of fire. This product is intended for evaluation purposes only. It shall be operated in a designated test area by personnel qualified according to local requirements and labor laws to work with non-insulated mains voltages and high-voltage circuits. This product shall never be operated unattended.

1.1 Safety warnings

1.1.1 Open-framed unenclosed PCB

This user manual describes the operation of the TEA2017DB1580. The TEA2017DB1580 is provided as an open framed, unenclosed printed circuit board assembly.

- Use of the TEA2017DB1580 is only intended for development laboratory environments. Only qualified professionals with training, expertise, and knowledge of electrical safety risk in the development and application of high-voltage electrical circuits should use the TEA2017DB1580.
- While the TEA2017DB1580 has been designed with user safety in mind, no agency has formally tested the demo board.
- The TEA2017DB1580 is not intended for and must not be used in a production unit. Any use beyond development and testing is strictly prohibited.

1.1.2 General high-voltage demo board user safety guidelines

- Work area safety:
  - Keep the work area clean and orderly.
  - One or more qualified observers must be present at any time the circuits are energized.
  - Effective barriers and signage must be present in the area where the demo board and its interface electronics are energized, indicating operation of accessible high voltages may be present, for protecting inadvertent access.
  - All interface circuits, power supplies, evaluation modules, instruments, meters, scopes, and other related apparatus used in a development environment exceeding 50 V (RMS)/75 V (DC) must be electrically located within a protected emergency power-off (EPO) protected power strip.
  - Use a stable and non-conductive work surface.
  - To attach measurement probes and instruments, use adequately insulated clamps and wires. No freehand testing whenever possible.

All information provided in this document is subject to legal disclaimers.

© NXP B.V. 2022. All rights reserved.

- Electrical safety
  As a precautionary measure, it is always good engineering practice to assume that the entire demo board may have fully accessible and active high voltages.
  - Deenergize the TEA2017DB1580 and all its inputs, outputs, and electrical loads before performing any electrical or other diagnostic measurements. Revalidate that the TEA2017DB1580 power has been safely deenergized.
  - With the TEA2017DB1580confirmed deenergized, proceed with required electrical circuit configurations, wiring, measurement equipment hook-ups, and other application needs, while still assuming the EVM circuit and measuring instruments are electrically live.
  - When the TEA2017DB1580 readiness is complete, energize the TEA2017DB1580 as intended.
- Personal safety
  - Wear personal protective equipment, for example, latex gloves or safety glasses with side shields, or protect the demo board in an adequate lucent plastic box with interlocks from accidental touch.

1.1.3 Safety warning

The board must be connected to mains voltage. Avoid touching the demo board while it is connected to the mains voltage. An isolated housing is obligatory when used in uncontrolled, non-laboratory environments. Galvanic isolation of the mains phase using a variable transformer is always recommended. Figure 1 shows the symbols that identify the isolated and non-isolated devices.



019aab173

a. Isolated

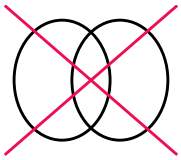

019aab174

b. Not isolated

Figure 1. Isolation symbols

Your use of the demo board is conditioned on agreement to and compliance with the terms of use. The terms of use may be found in Section 13.

This product has not undergone formal EU EMC assessment. As a component used in a research environment, it is the responsibility of the user to ensure that the finished assembly does not cause undue interference when used. It cannot be CE marked unless assessed.

All information provided in this document is subject to legal disclaimers.

© NXP B.V. 2022. All rights reserved.

1.2 TEA2017AAT

The TEA2017AAT provides high efficiency at all power levels. Together with the TEA2095T, a dual LLC resonant SR controller, a high-performance cost-effective resonant power supply can be designed. The power supply designed can meet the efficiency regulations of Energy Star, the Department of Energy (DoE), the Eco-design Directive of the European Union, the European Code of Conduct, and other guidelines.

In general, resonant converters show an excellent efficiency at high power levels, while at lower levels their efficiency reduces because of the relatively high magnetizing current losses. To reach a high efficiency at all power levels, the TEA2017AAT provides a low-power operation mode (LP) and extensive burst mode configuration options.

Most LLC resonant converter controllers regulate the output power by adjusting the operating frequency. The TEA2017AAT regulates the output power by adjusting the voltage across the primary resonant capacitor for accurate state control and a linear power control.

The primary resonant capacitor voltage provides accurate information about the output power to the controller using a voltage divider. The voltage divider sets the output power levels. It determines when the system switches from the high-power mode to low-power mode and when it switches from low-power mode to burst mode.

The TEA2017 PFC controller has three different operation modes:

- DCM/QR
- DCM/QR/CCM
- Fixed frequency

In DCM/QR and DCM/QR/CCM mode, the frequency is regulated and can be tuned for maximum efficiency. The PFC current is shaped such that the mains current is almost sinusoidal resulting in a low THD and high PF. To optimize EMI performance, the PFC frequency can be jittered. The burst mode with soft start/stop yields high efficiency at low loads without noticeable audible noise.

An extensive number of parameter settings for operation can define operation modes and protections. Protections can be stored/programmed in an internal memory. This feature provides flexibility and ease of design to optimize controller properties to application-specific requirements or even optimize/correct performance during power supply production. At start-up, the IC loads the parameter values for operation. For easy design work during product development, an IC version is available to change settings on the fly.

All information provided in this document is subject to legal disclaimers.

© NXP B.V. 2022. All rights reserved.

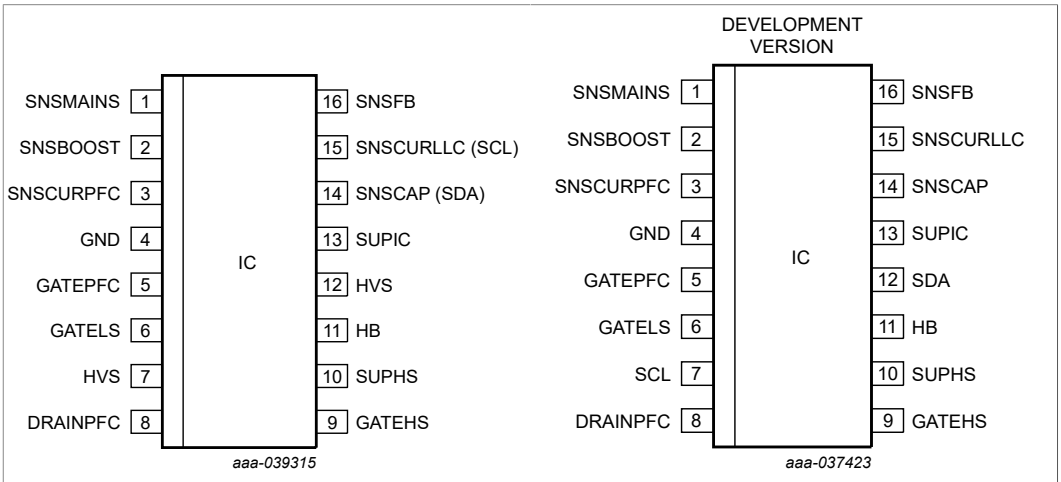

a. Normal version: TEA2017AAT

b. Development version: TEA2017AATdev

Figure 2. TEA2017AAT pinning

Note: *The TEA2017DB1580 demo board contains the development version.*

1.3 TEA2095T

The TEA2095T is a synchronous rectifier (SR) controller IC for LLC switched-mode power supplies. It incorporates an adaptive gate drive method for maximum efficiency at any load.

The TEA2095T is a dedicated controller IC for synchronous rectification on the secondary side of resonant converters. It includes two driver stages for driving the SR MOSFETs, which rectify the outputs of the central-tap secondary transformer windings.

The two-gate driver stages have their own sensing inputs and operate independently.

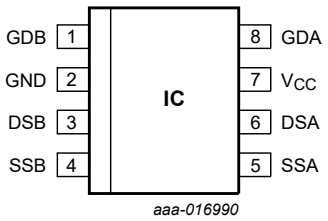

Figure 3. TEA2095T pinning

1.4 Demo board

The TEA2017DB1580 demo board can operate at a mains input voltage between 90 V (RMS) and 264 V (RMS; universal mains).

The TEA2017DB1580 demo board contains three subcircuits (see Section 7):

- A DCM/BCM/CCM-type PFC converter
- A resonant LLC-type HBC converter
- An SR resonant LLC-type output stage

All information provided in this document is subject to legal disclaimers.

© NXP B.V. 2022. All rights reserved.

The purpose of the demo board is to show and evaluate the operation of the TEA2017AAT and TEA2095T in a single output supply, which includes the operation modes in a typical design. The performance passes general standards, including the EuP lot6 requirements. It can be used as a starting point for power supply design using the TEA2017AAT and TEA2095T controller ICs.



Figure 4. TEA2017DB1580 demo board

1.5 TEA2017AAT GUI and USB-I^{2}C interface

In addition to the normal TEA2017AAT ICs, NXP Semiconductors provides special IC versions for product development. For easy modification of settings, even while the IC is operating ("on the fly" parameter changing), the TEA2017AATdev development samples contain an I^{2}C interface connection on the high-voltage spacer pins. The TEA2017DB1580 demo board uses the development version of the TEA2017AAT.

1.5.1 Development IC samples: SDA and SCL on spacer pins

Connections to the IC second I^{2}C interface are provided on high-voltage spacer pins 7 and 12. Normally, these pins are not connected.

All information provided in this document is subject to legal disclaimers.

© NXP B.V. 2022. All rights reserved.

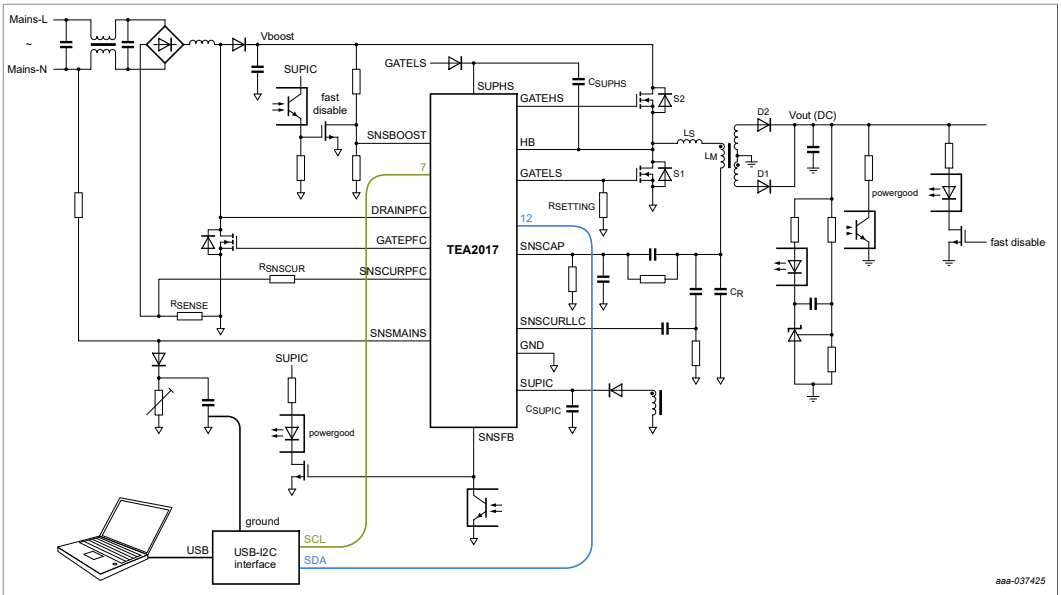

Figure 5. Development IC: I²C connections with spacer pins

1.5.2 Production IC samples: SDA and SCL on combined pins

In the production version of the TEA2017AAT, the I²C interface is available on the combined pins SNSCURLLC (SCL) and SNSCAP (SDA). To program the IC, it must be put in the disabled condition pulling SNSBOOST to GND. During programming, SUPIC must supply the IC.

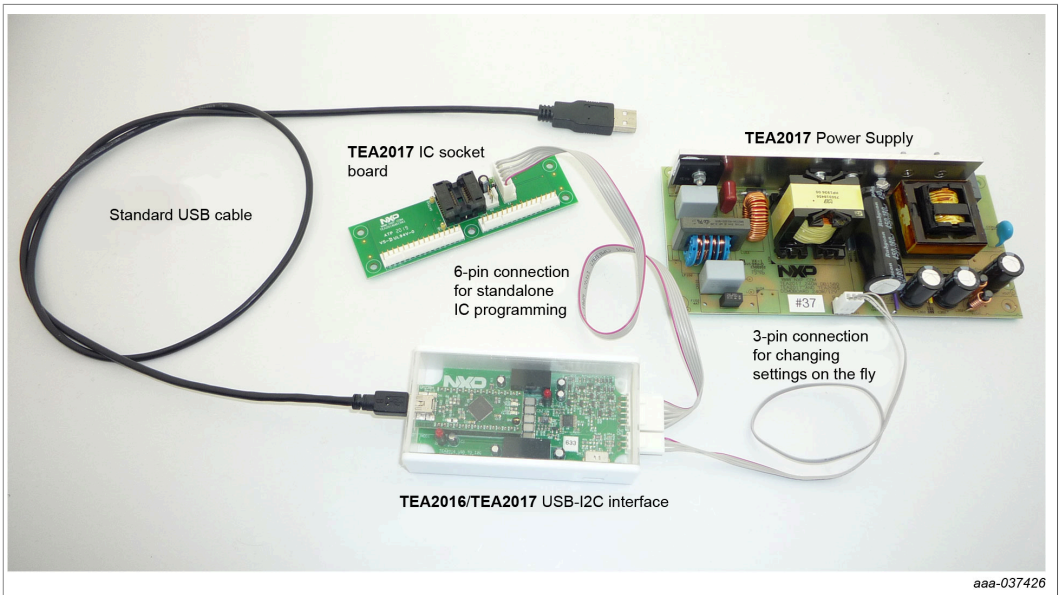

Figure 6. Two TEA2017AAT programming setups: on the fly and standalone

All information provided in this document is subject to legal disclaimers.

© NXP B.V. 2022. All rights reserved.

1.6 Graphical user interface (GUI) and USB-I^{2}C interface

During power supply development, a GUI program on a computer communicates with the IC via a USB-I^{2}C interface. The Ringo TEA2017AAT software with GUI provides the correct protocol and offers several options and tools to work with the IC settings.

The Ringo TEA2017AAT GUI requires Windows 7/8/10 and a 64-bits processor.

All information provided in this document is subject to legal disclaimers.

© NXP B.V. 2022. All rights reserved.

2 Specifications

Table 1. TEA2017DB1580 board specification

Symbol	Description	Value	Conditions
Input			
V_i	input voltage	90 V (RMS) to 264 V (RMS)	AC
f_i	input frequency	47 Hz to 63 Hz	
$P_{i(noload)}$	no-load input power	< 100 mW	at 230 V/50 Hz
$P_{i(load-250mW)}$	standby power consumption	< 450 mW	at 230 V/50 Hz
Output			
V_o	output voltage	12 V	
I_o	output current	0 A to 20 A	continuous
$I_{o(max)}$	maximum output power	24 A	OPP level
$I_{o(peak)max}$	maximum peak output current	30 A	t < 50 ms; limited by power limit setting (155 %)
t_{hold}	hold time	> 10 ms	at 115 V/60 Hz
t_{start}	start time	< 0.5 s	at 115 V/60 Hz
η	efficiency	≥ 89 %	average according to CoC

Note: *The TEA2017DB1580 board shows a single output (12 V) desktop PC application that requires forced cooling (fan) at high output power (when 120 W is exceeded).*

All information provided in this document is subject to legal disclaimers.

© NXP B.V. 2022. All rights reserved.

3 Board photographs

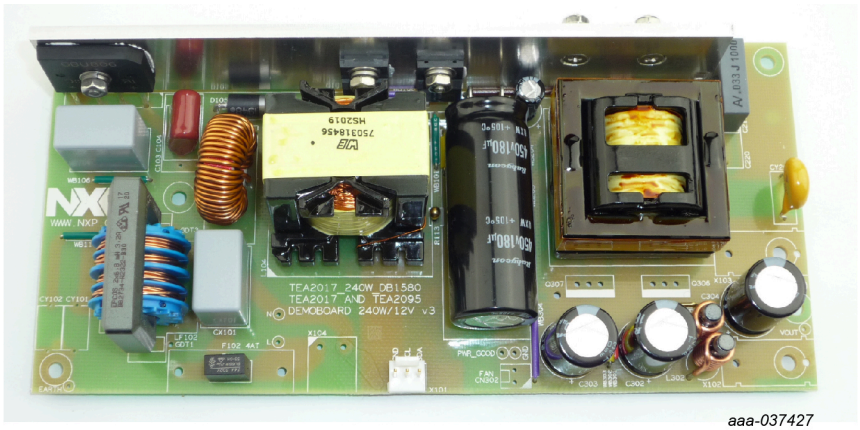

aaa-037427

a. Top

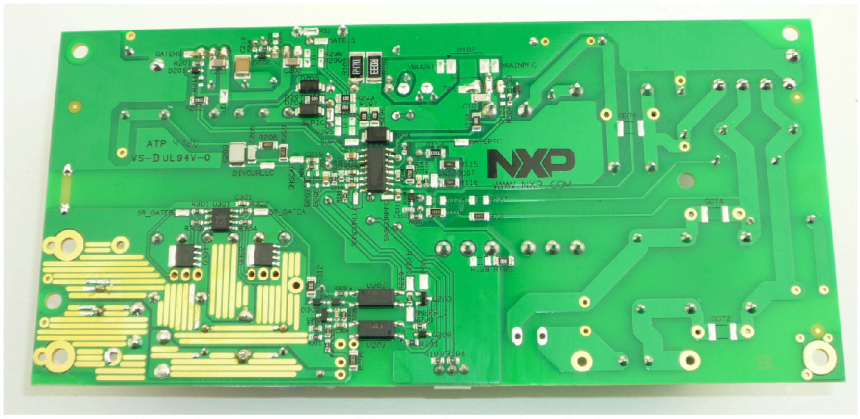

aaa-037428

b. Bottom

Figure 7. TEA2017DB1580 board photographs

All information provided in this document is subject to legal disclaimers.

© NXP B.V. 2022. All rights reserved.

4 Performance measurements

4.1 Test facilities

- Oscilloscope: Yokogawa DL7480
- AC Power Source: Agilent 6812B
- Electronic load: Keithley 2380-120-60
- Digital power meter: Yokogawa WT210

4.2 Start-up and switch-off behavior

4.2.1 Output voltage risetime

The risetime of the output voltage (measured from 10 % to 90 % point of the nominal output) is between 3 ms and 6 ms (see Figure 8). The risetime depends on the output current load.

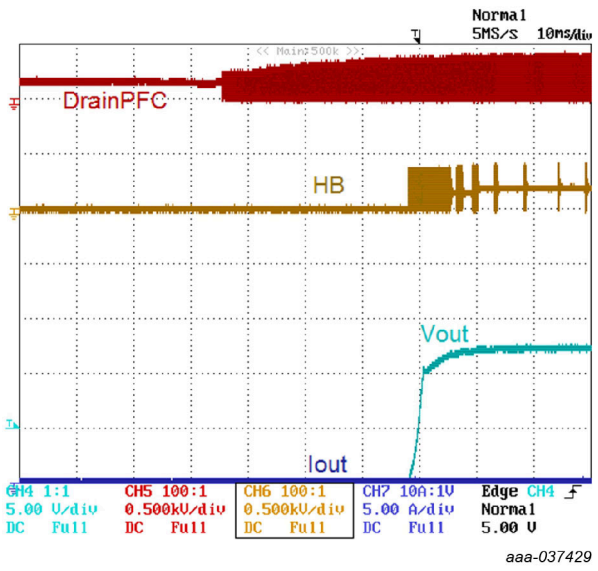

a. V_{mains} = 115 V; I_{out} = 0 A

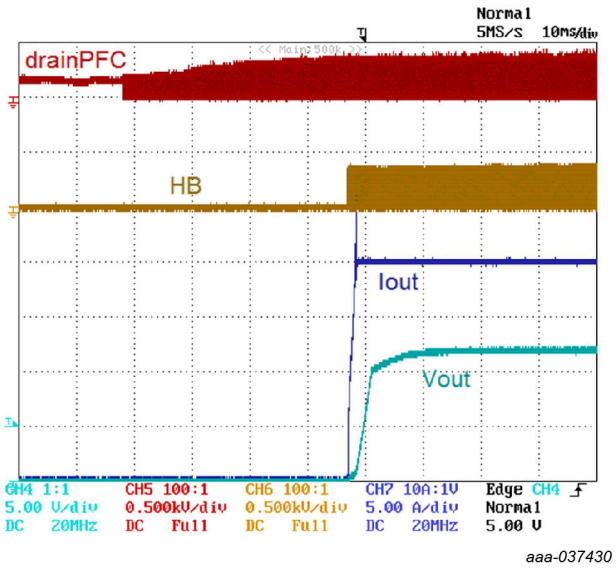

b. V_{mains} = 115 V; I_{out} = 20 A

Figure 8. Start-up behavior

All information provided in this document is subject to legal disclaimers.

© NXP B.V. 2022. All rights reserved.

4.2.2 Start-up time

The total start-up time from mains switch-on until the output voltage reaches 12 V is approximately 400 ms (see Figure 9).

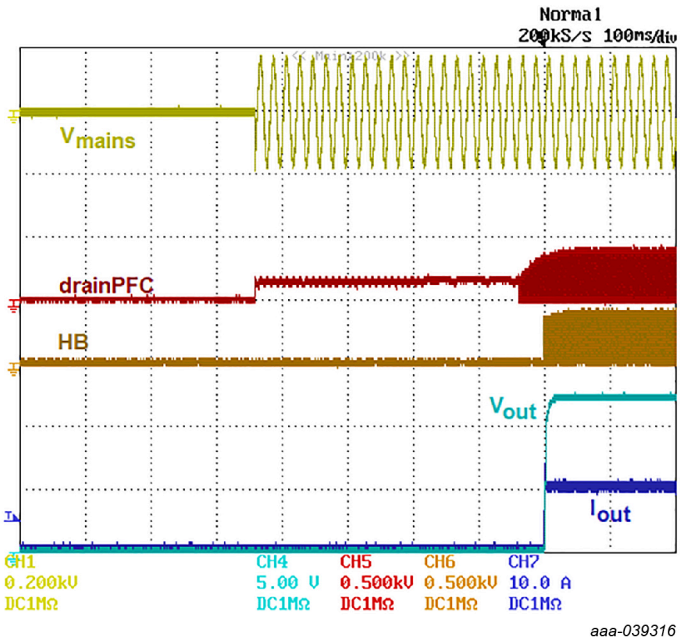

Figure 9. Total start-up time - V_{mains} = 115 V; I_{out} = 10 A

4.2.3 Mains switch-off and X-capacitor discharge

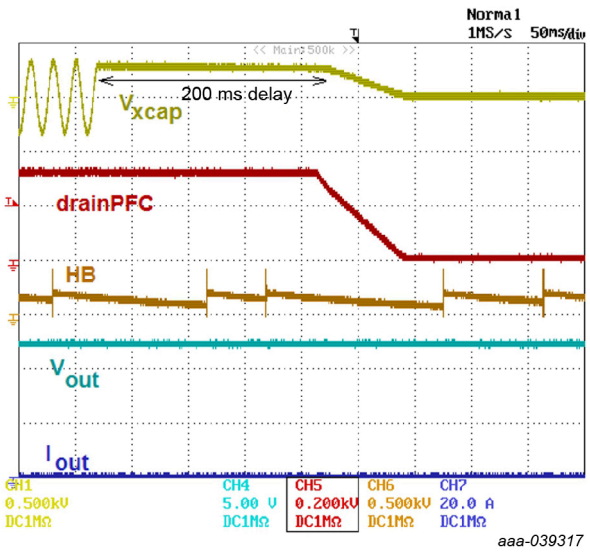

a. V_{mains} = 230 V; I_{out} = 0 A

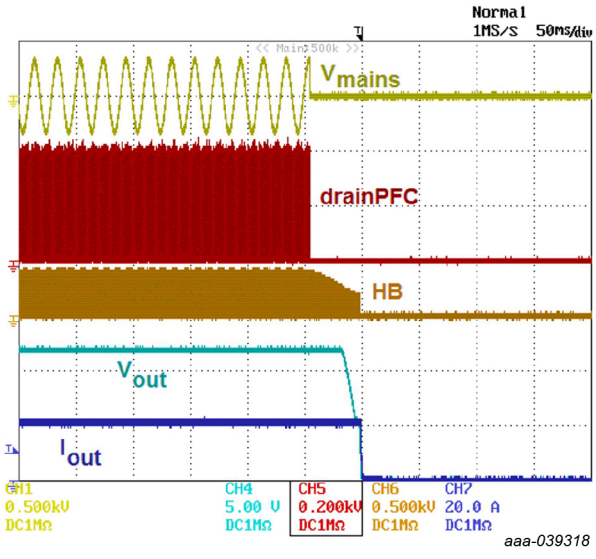

b. V_{mains} = 230 V; I_{out} = 20 A

Figure 10. Mains switch-off behavior

All information provided in this document is subject to legal disclaimers.

© NXP B.V. 2022. All rights reserved.

4.3 Efficiency

4.3.1 Efficiency characteristics

To determine the efficiency, the output voltage (not counting the losses in an output connection cable) on the TEA2017DB1580 demo board was measured.

Table 2. Efficiency results

Condition	COC efficiency requirement (%)	Efficiency (%)				
		Average	25 % load	50 % load	75 % load	100 %
115 V/60 Hz	> 89	91	90.9	91.5	91.4	90.3
230 V/50 Hz	> 89	93.1	92.3	93.6	93.6	93

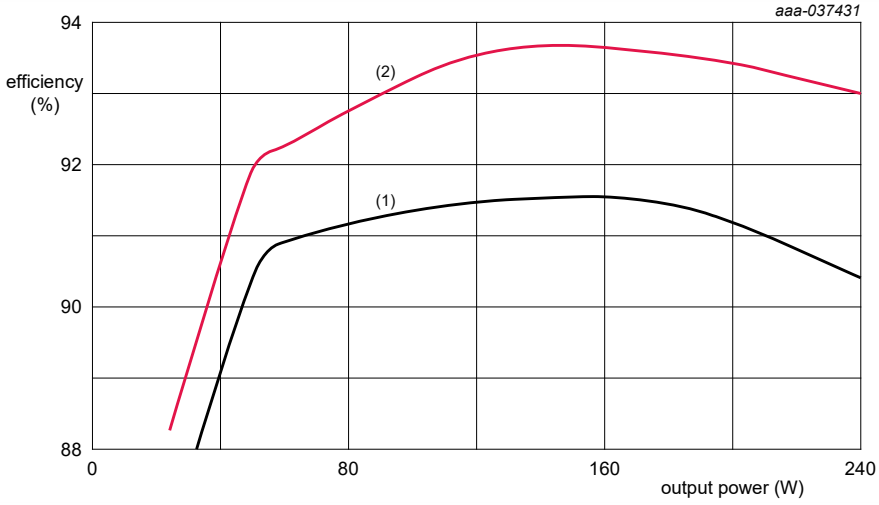

(1) 115 V (AC)/60 Hz
(2) 230 V (AC)/50 Hz

Figure 11. Efficiency graph

4.3.2 No-load power consumption

Table 3. Output voltage and power consumption at no load

Condition	Requirement (mW)	Output voltage (V)	No load power consumption (mW)
115 V/60 Hz	≤ 100 mW	12.3	50
230 V/50 Hz	≤ 100 mW	12.3	60

4.3.3 Standby power consumption

Results depend on parameter settings for BM operation. A lower LLC BM repetition frequency and a higher energy per cycle result in a lower power consumption. Output voltage ripple increases as a consequence.

All information provided in this document is subject to legal disclaimers.

© NXP B.V. 2022. All rights reserved.

Table 4. Output voltage and power consumption at standby

Condition	Output power (mW)	Output voltage (V)	Standby power consumption (mW)
115 V/60 Hz	250 mW	12.3	385
230 V/50 Hz	250 mW	12.3	390
EuP lot6 requirement	250 mW	-	< 500

4.3.4 Power factor

Table 5. Power factor correction

Condition	Requirement	Output Power (W)	Power Factor
115 V/60 Hz	≥ 0.9	240	0.994
230 V/50 Hz		240	0.998

4.4 Operation mode transitions

There are three modes of operation:

- High-power mode (HP)
- Low-power mode (LP)
- Burst mode (BM)

A parameter setting can modify the levels of the transition between operation modes.

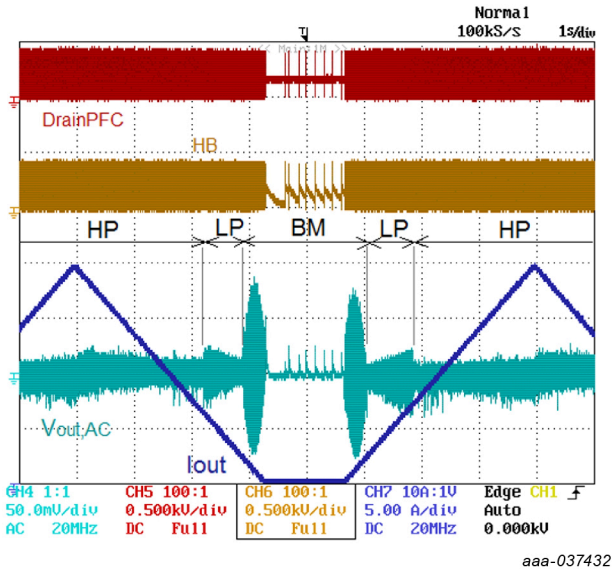

Load sweep: slowly varying the output current to observe mode transitions

Figure 12. Operating mode transitions BM-LP-HP

- HP to LP transition: I_{out} = 5.9 A
- LP to HP transition: I_{out} = 7.0 A
- BM transition: I_{out} = 1.6 A

All information provided in this document is subject to legal disclaimers.

© NXP B.V. 2022. All rights reserved.

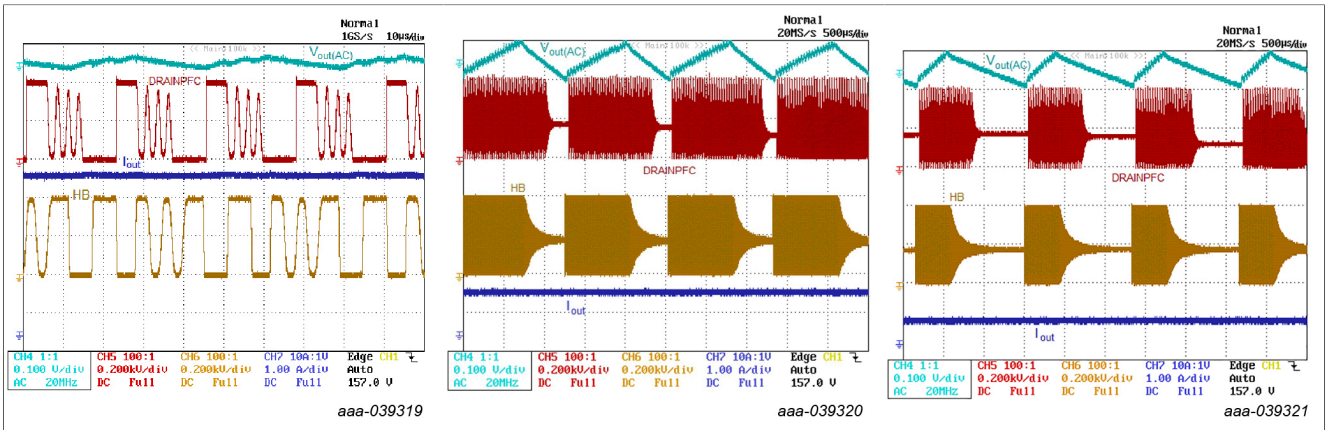

a. LP mode (I_{out} = 4 A) a. BM mode (I_{out} = 1 A) a. BM mode (I_{out} = 0.5 A)

Figure 13. LP and BM (LLC and LLC+PFC) behavior

4.5 Output voltage ripple

Maximum output voltage ripple is approximately 100 mVpp during BM operation.

At maximum output power in HP mode, the output voltage ripple is less than 20 mV.

The amount of ripple in BM operation can be modified using parameter settings, for example, BM repetition frequency.

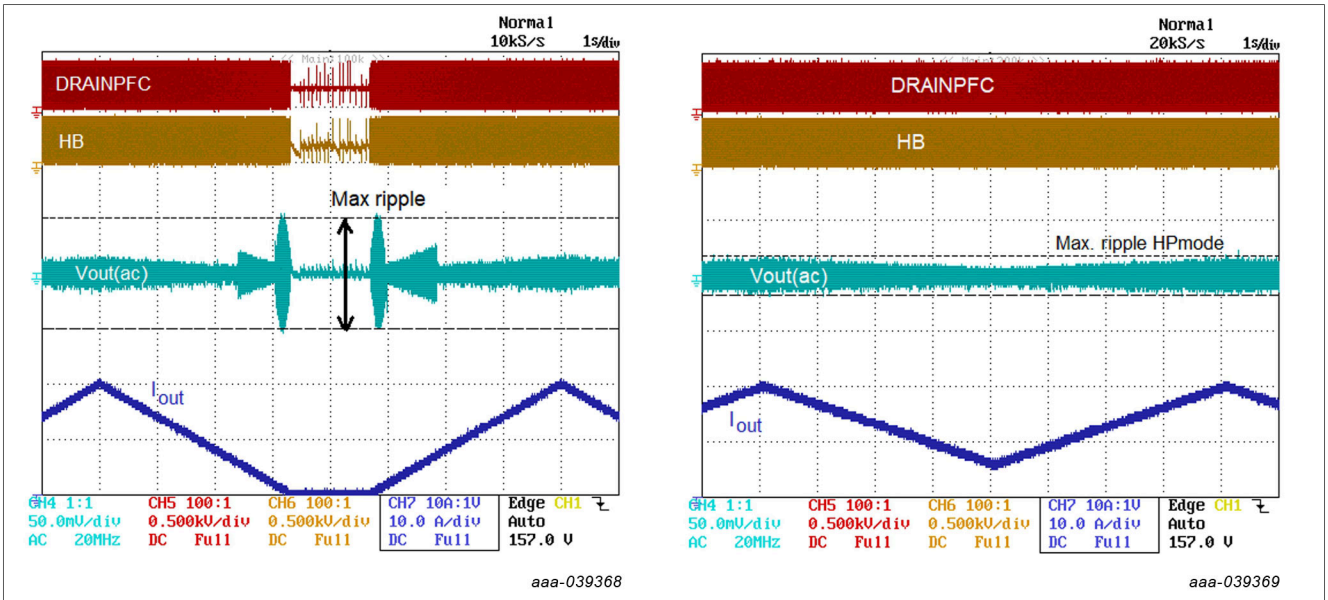

Normally, the maximum output voltage ripple is at an LLC BM 50 % duty cycle.

Figure 14. Output voltage ripple

All information provided in this document is subject to legal disclaimers.

© NXP B.V. 2022. All rights reserved.

4.6 Dynamic load response

The dynamic load response test shows the result of a series of load steps on the output. The output current of the converter is changed in steps between 0 A and 20 A at a repetition frequency of 1 Hz, 10 Hz, 100 Hz, and 1000 Hz with a duty cycle of 50 %.

- The maximum voltage varies between 12.49 V and 12.60 V
- The minimum voltage varies between 11.11 V and 11.87 V
- The output voltage can be defined as 12 V (+5 %/−7.5 %)

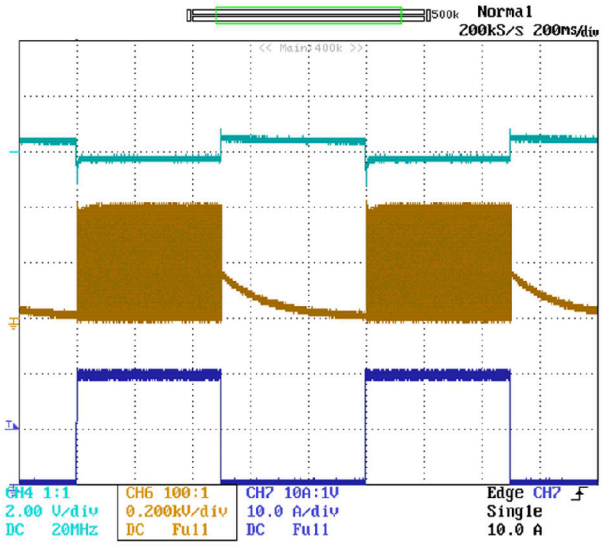

Load step (0 A - 20 A - 0 A) at 1 Hz; duty cycle = 50 %

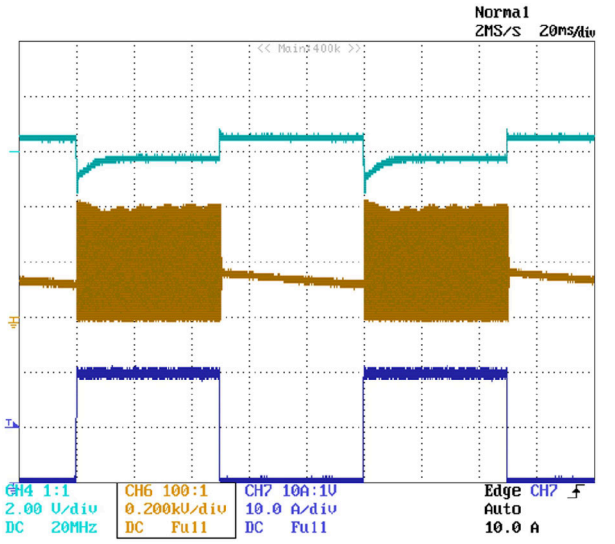

Load step (0 A - 20 A - 0 A) at 10 Hz; duty cycle = 50 %

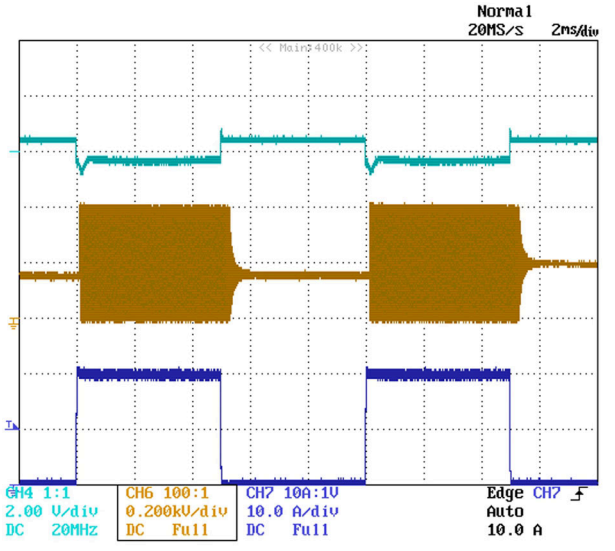

Load step (0 A - 20 A - 0 A) at 100 Hz; duty cycle = 50 %

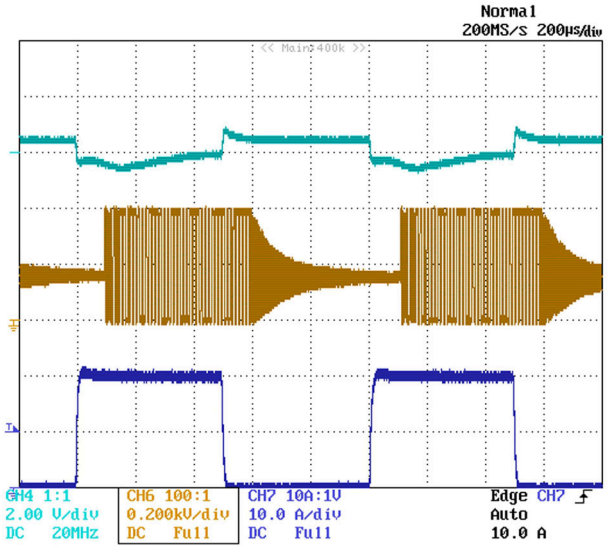

Load step (0 A - 20 A - 0 A) at 1000 Hz; duty cycle = 50 %

Figure 15. Load step behavior

All information provided in this document is subject to legal disclaimers.

© NXP B.V. 2022. All rights reserved.

4.7 Power limit

The output power is limited at 30.8 A at 12 V (P_{out} = 370 W = 154 %).

The power limit can be modified with the parameter settings (155 % selected).

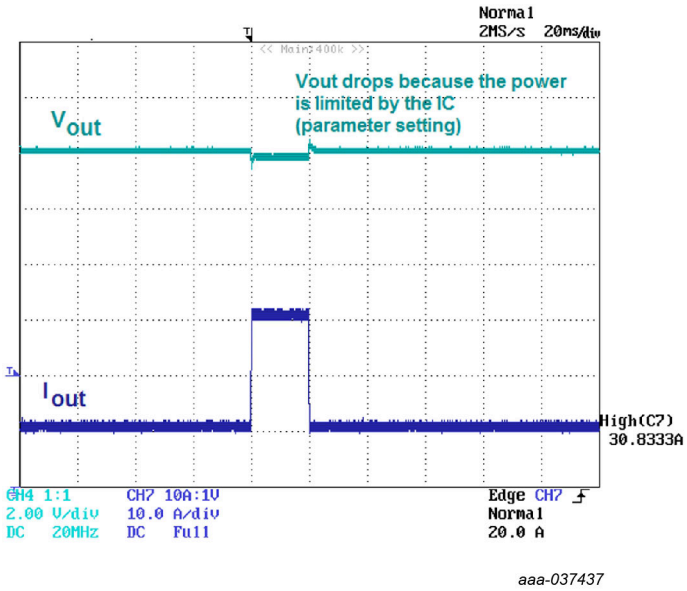

The power limit can be checked with a short load step (to avoid OPP protection). The output voltage drops because the power is limited by the TEA2017AAT parameter settings.

Figure 16. Power limit; load step (10 A - 30.8 A - 10 A)

All information provided in this document is subject to legal disclaimers.

© NXP B.V. 2022. All rights reserved.

4.8 Overpower protection (OPP)

The overpower protection (OPP1) is at 26.1 A. It stands for 26.1 A × 12.3 V = 321 W.

The selected setting is on −20 %. It corresponds to P_{limit} − 20 % = 0.8 × 155 % = 124 %. 124 % power stands for 1.24 × 240 W = 298 W.

The OPP1 level can be modified with parameter settings.

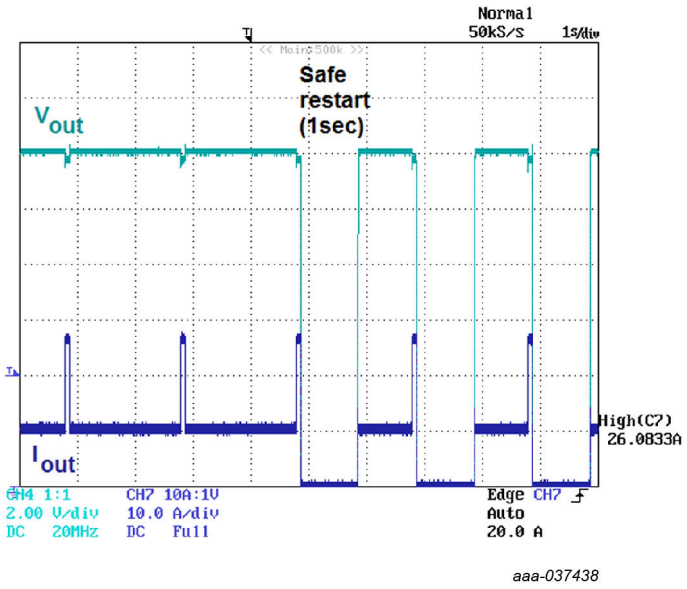

Figure 17. OPP with safe restart

All information provided in this document is subject to legal disclaimers.

© NXP B.V. 2022. All rights reserved.

4.9 EMI

The conducted electromagnetic interference (EMI) of the TEA2017DB1580 demo board was measured under the following conditions:

- Load resistor: 0.6 Ω; V_{out} = 12 V; I_{out} = 20 A
- V_{line} = 230 V/50 Hz or 115 V/50 Hz

The conducted EMI was measured both in the line and neutral. The product complies with the EMC standard.

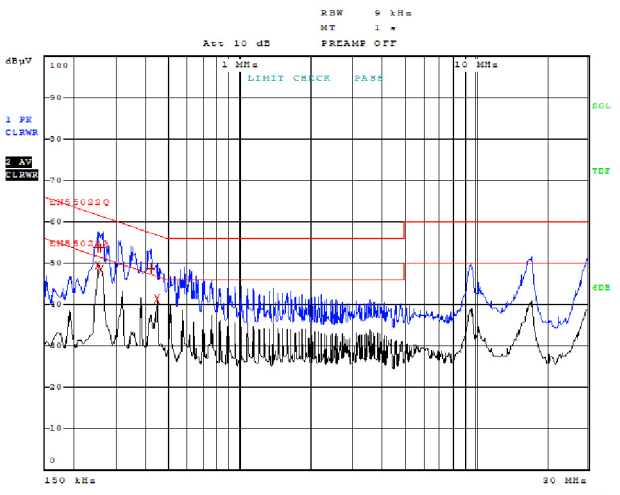

aaa-037439

EDIT PEAK LIST (Final Measurement Results)			
Trace1:	EN55022Q		
Trace2:	EN55022A		
Trace3:	---		
TRACE	FREQUENCY	LEVEL dBµV	DELTA LIMIT dB
2 Average	254 kHz	49.46 L1	-2.16
2 Average	258 kHz	48.32 L1	-3.16
2 Average	446 kHz	41.45 L1	-8.49
1 Quasi Peak	262 kHz	53.65 L1	-7.71

aaa-042984

a. Line

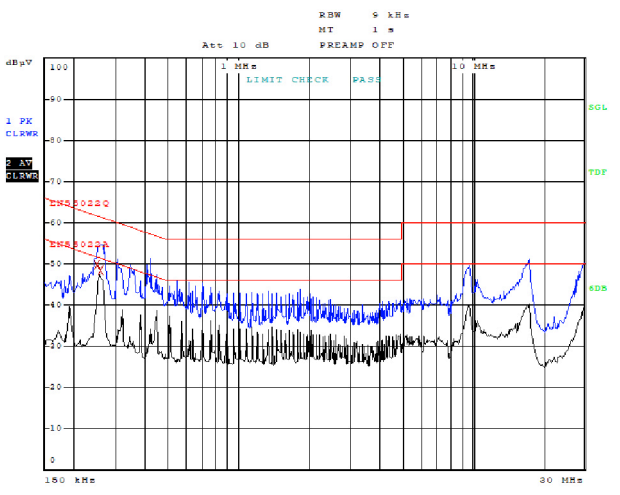

aaa-037440

EDIT PEAK LIST (Final Measurement Results)			
Trace1:	EN55022Q		
Trace2:	EN55022A		
Trace3:	---		
TRACE	FREQUENCY	LEVEL dBµV	DELTA LIMIT dB
2 Average	254 kHz	49.77 L1	-1.85
2 Average	258 kHz	48.47 L1	-3.01

aaa-042986

b. Neutral

Figure 18. Conducted EMI at V_{line} = 230 V (RMS)

All information provided in this document is subject to legal disclaimers.

© NXP B.V. 2022. All rights reserved.

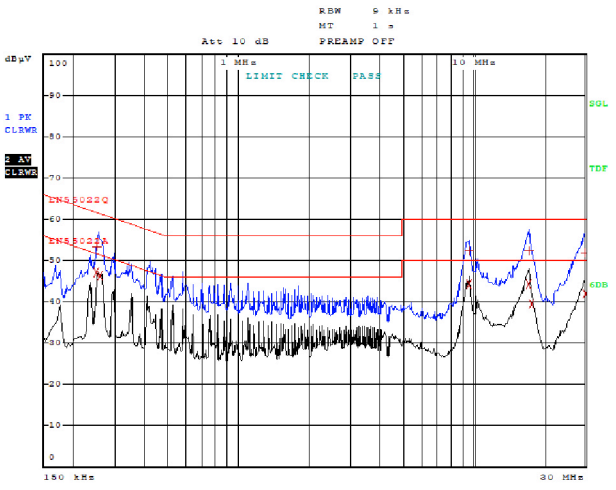

aaa-037441

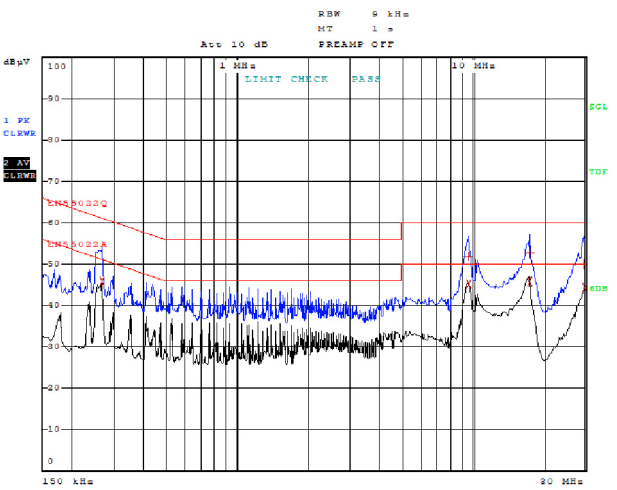

aaa-037442

EDIT PEAK LIST (Final Measurement Results)

Trace1: EN55022Q
Trace2: EN55022A
Trace3: ---

TRACE		FREQUENCY	LEVEL dBµV		DELTA LIMIT dB
2	Average	254 kHz	47.12	L1	-4.50
2	Average	262 kHz	46.45	L1	-4.91
2	Average	17.314 MHz	44.27	L1	-5.72
2	Average	9.65 MHz	44.14	N	-5.85
1	Quasi Peak	17.314 MHz	52.33	L1	-7.66

aaa-042988

EDIT PEAK LIST (Final Measurement Results)

Trace1: EN55022Q
Trace2: EN55022A
Trace3: ---

TRACE		FREQUENCY	LEVEL dBµV		DELTA LIMIT dB
2	Average	17.442 MHz	45.74	L1	-4.25
2	Average	9.658 MHz	45.35	N	-4.64
2	Average	266 kHz	45.73	L1	-5.51
2	Average	29.962 MHz	44.13	L1	-5.86
1	Quasi Peak	17.442 MHz	52.68	L1	-7.31

aaa-042989

a. Line

b. Neutral

Figure 19. Conducted EMI at V_{line} = 115 V (RMS)

5 MTP settings

For good performance, the IC in the TEA2017DB1580 demo board contains a set of standard settings.

These settings can be modified to improve a certain performance subject. Or, using a file (.mif) that contains the settings information, the Ringo GUI can load and save a set of settings.

In the original board, the settings of the IC are the default TEA2017AATAATdev programming values. Section 12 shows a list of all settings.

6 Thermal information

The TEA2017DB1580 board shows a single output (12 V) desktop PC application that requires forced cooling (fan) at high output power (when 120 W is exceeded).

All information provided in this document is subject to legal disclaimers.

© NXP B.V. 2022. All rights reserved.

7 Circuit diagrams

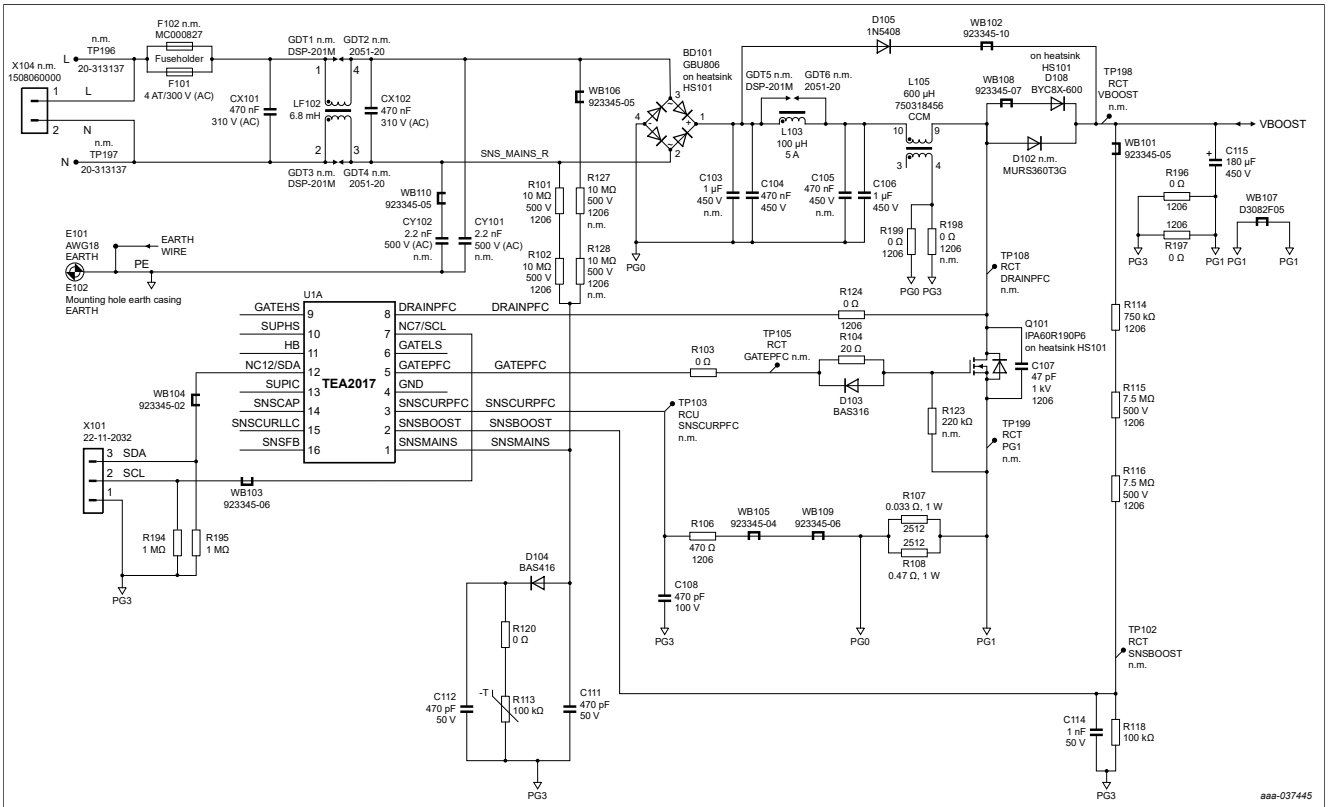

Figure 20. TEA2017DB1580 240 W demo board (PFC part)

All information provided in this document is subject to legal disclaimers.

© NXP B.V. 2022. All rights reserved.

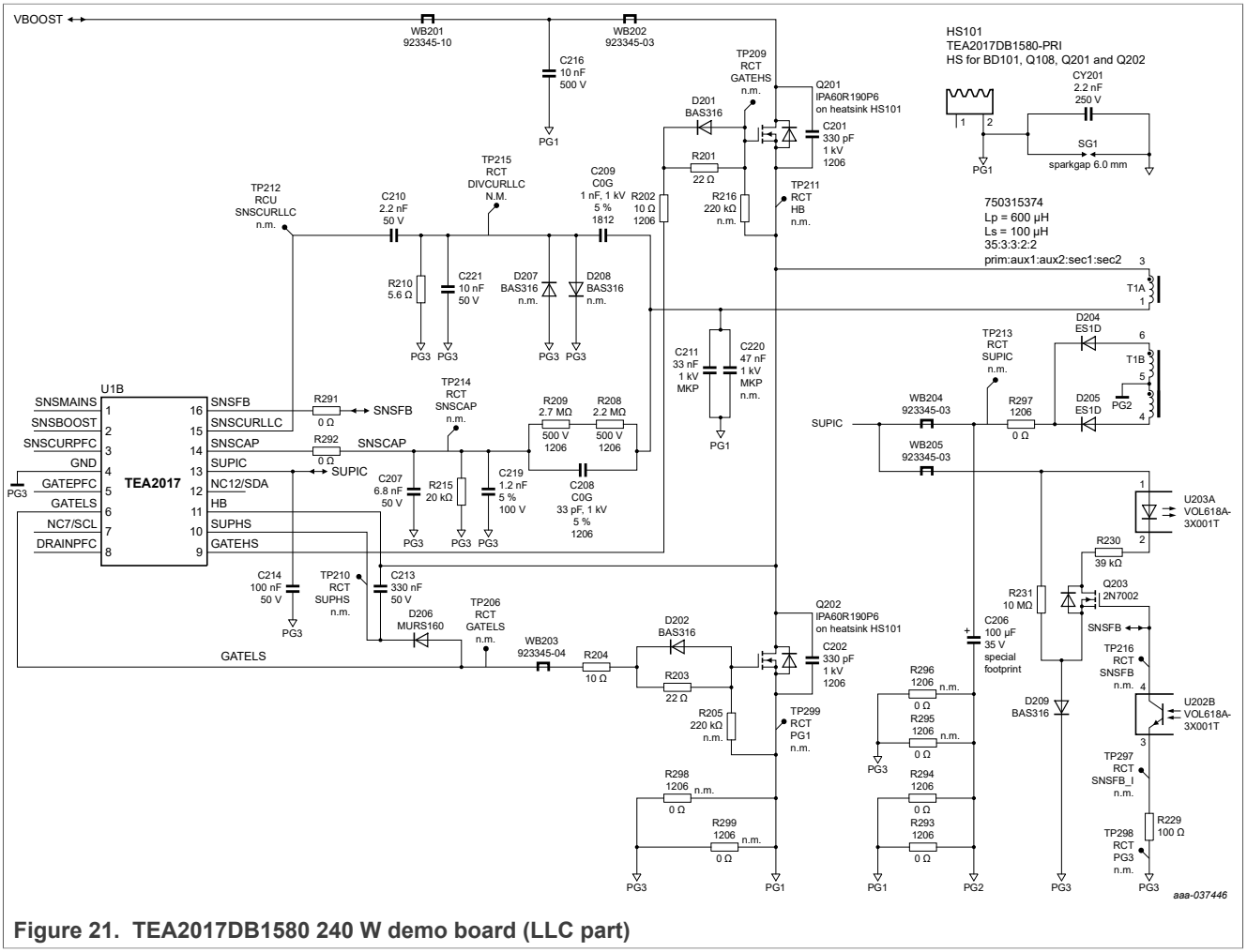

Figure 21. TEA2017DB1580 240 W demo board (LLC part)

All information provided in this document is subject to legal disclaimers.

© NXP B.V. 2022. All rights reserved.

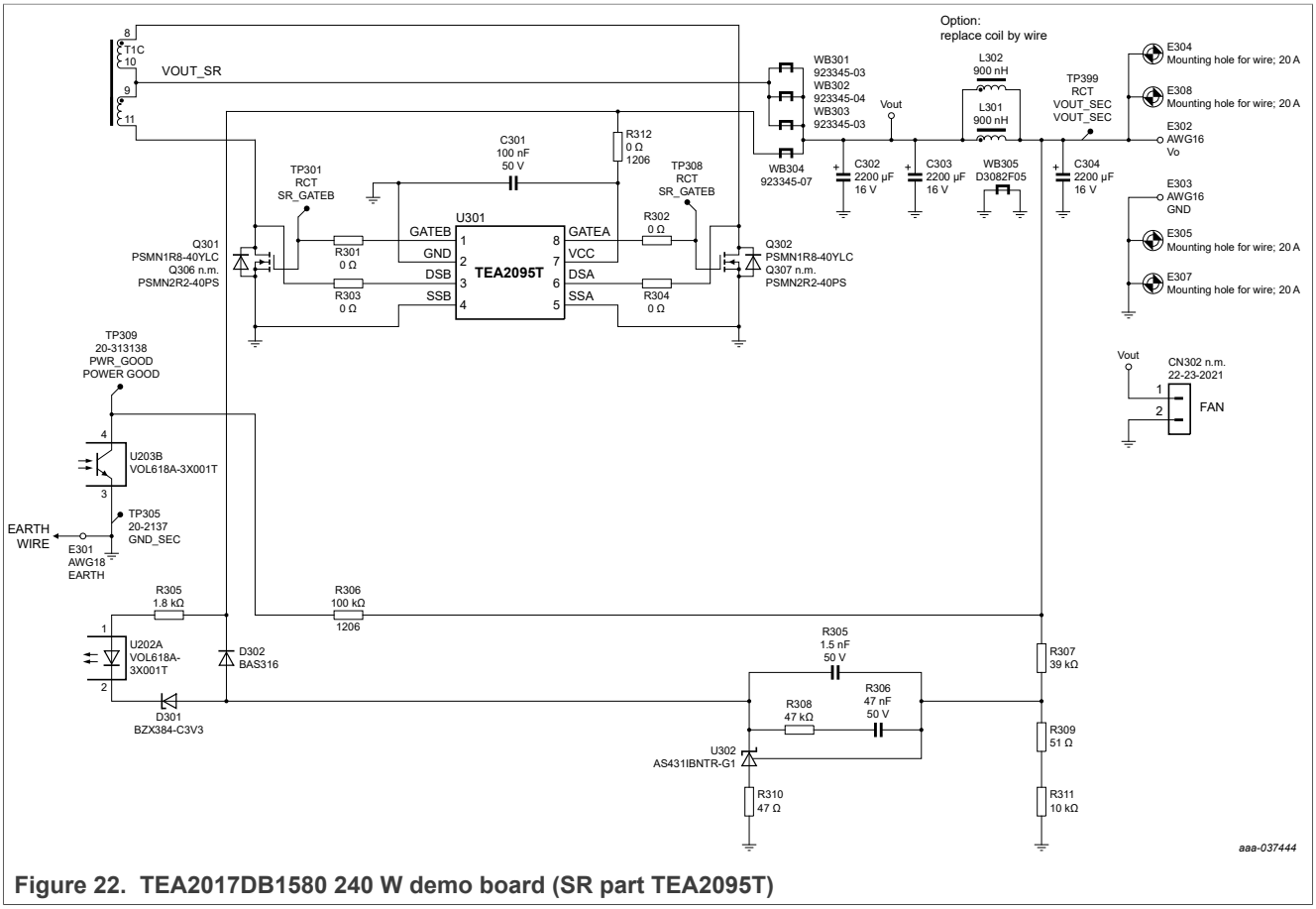

Figure 22. TEA2017DB1580 240 W demo board (SR part TEA2095T)

All information provided in this document is subject to legal disclaimers.

© NXP B.V. 2022. All rights reserved.

8 Circuit diagrams with comments

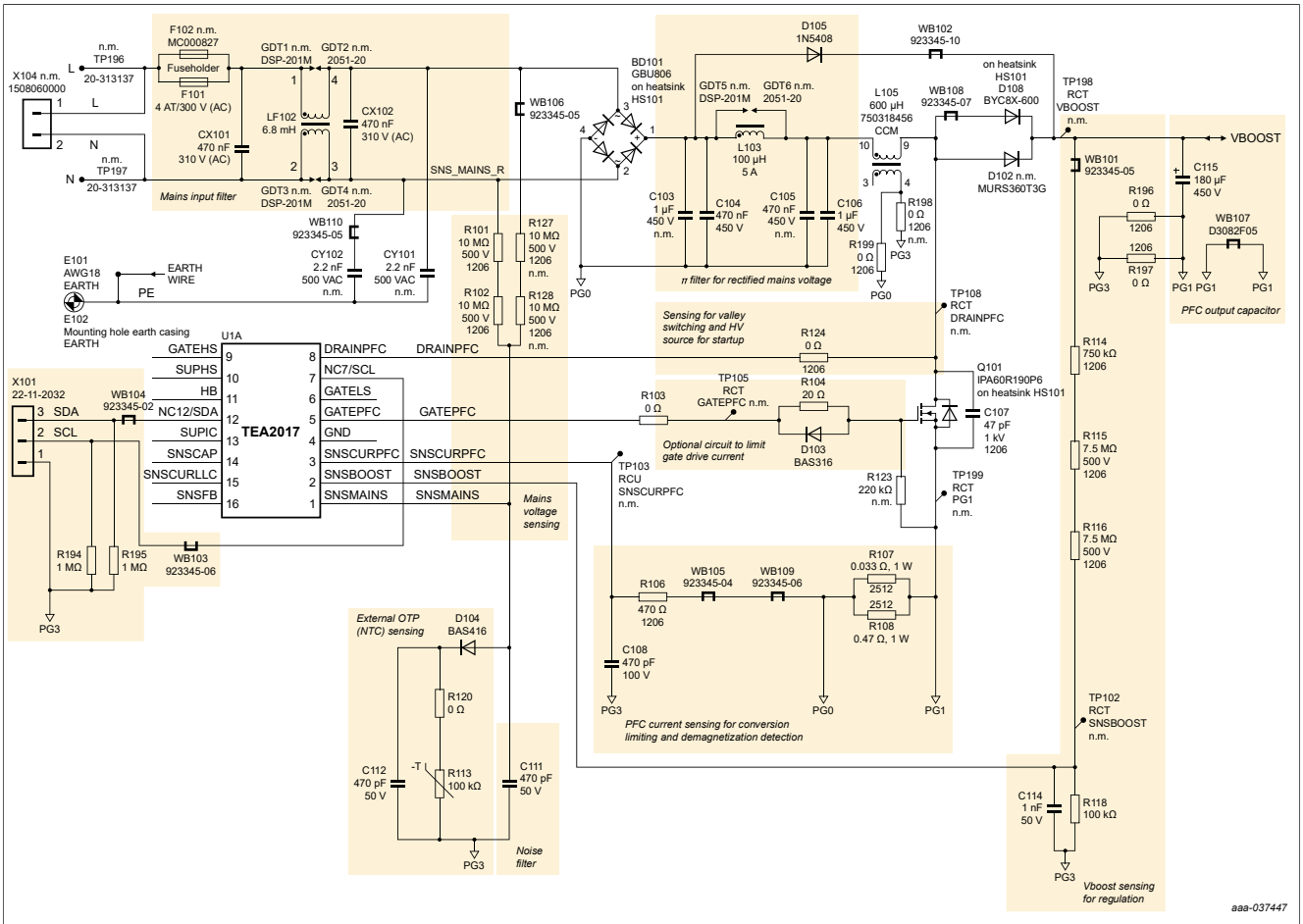

Figure 23. TEA2017DB1580 240 W demo board (PFC part) with comments

All information provided in this document is subject to legal disclaimers.

© NXP B.V. 2022. All rights reserved.

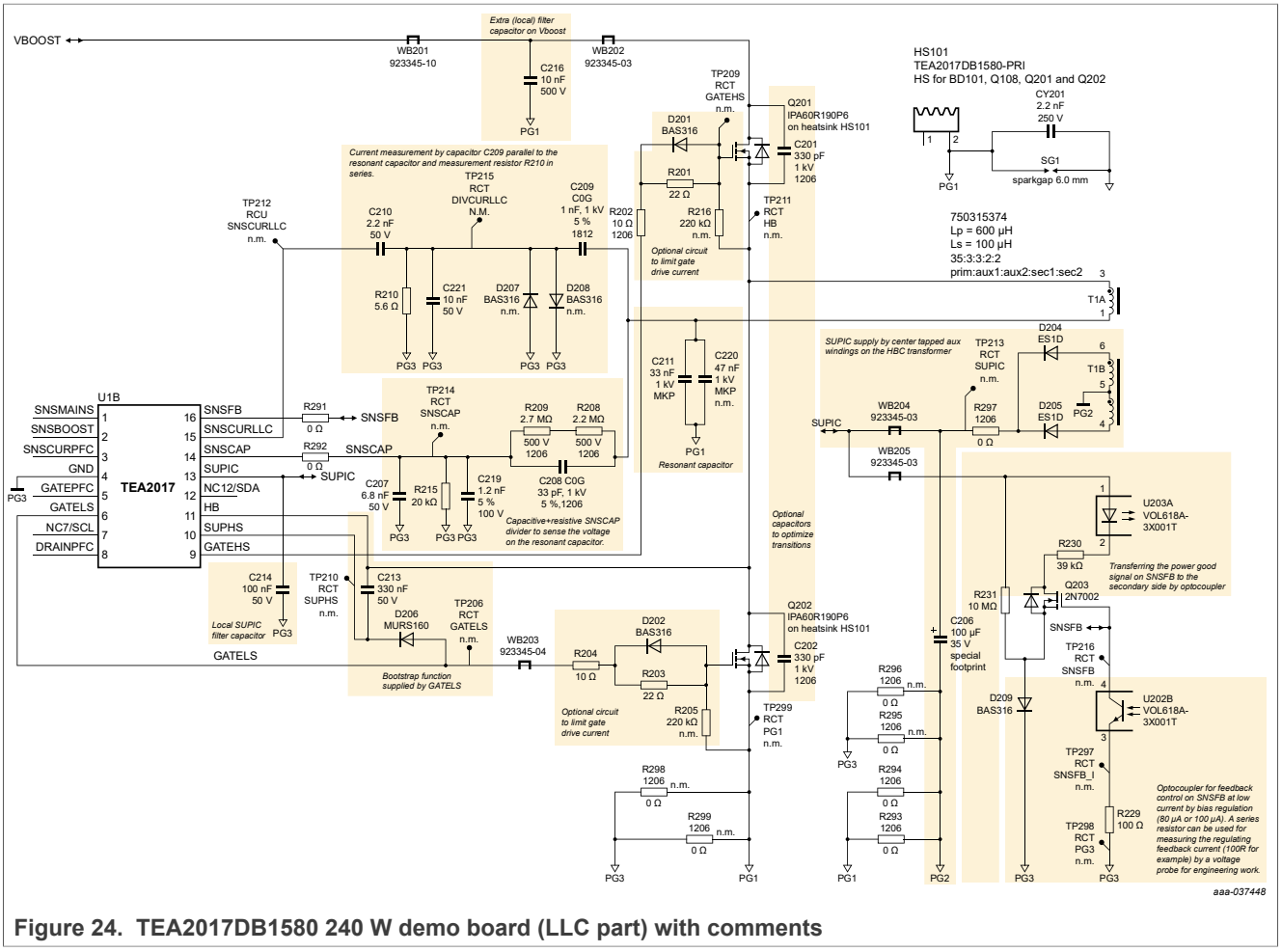

Figure 24. TEA2017DB1580 240 W demo board (LLC part) with comments

All information provided in this document is subject to legal disclaimers.

© NXP B.V. 2022. All rights reserved.

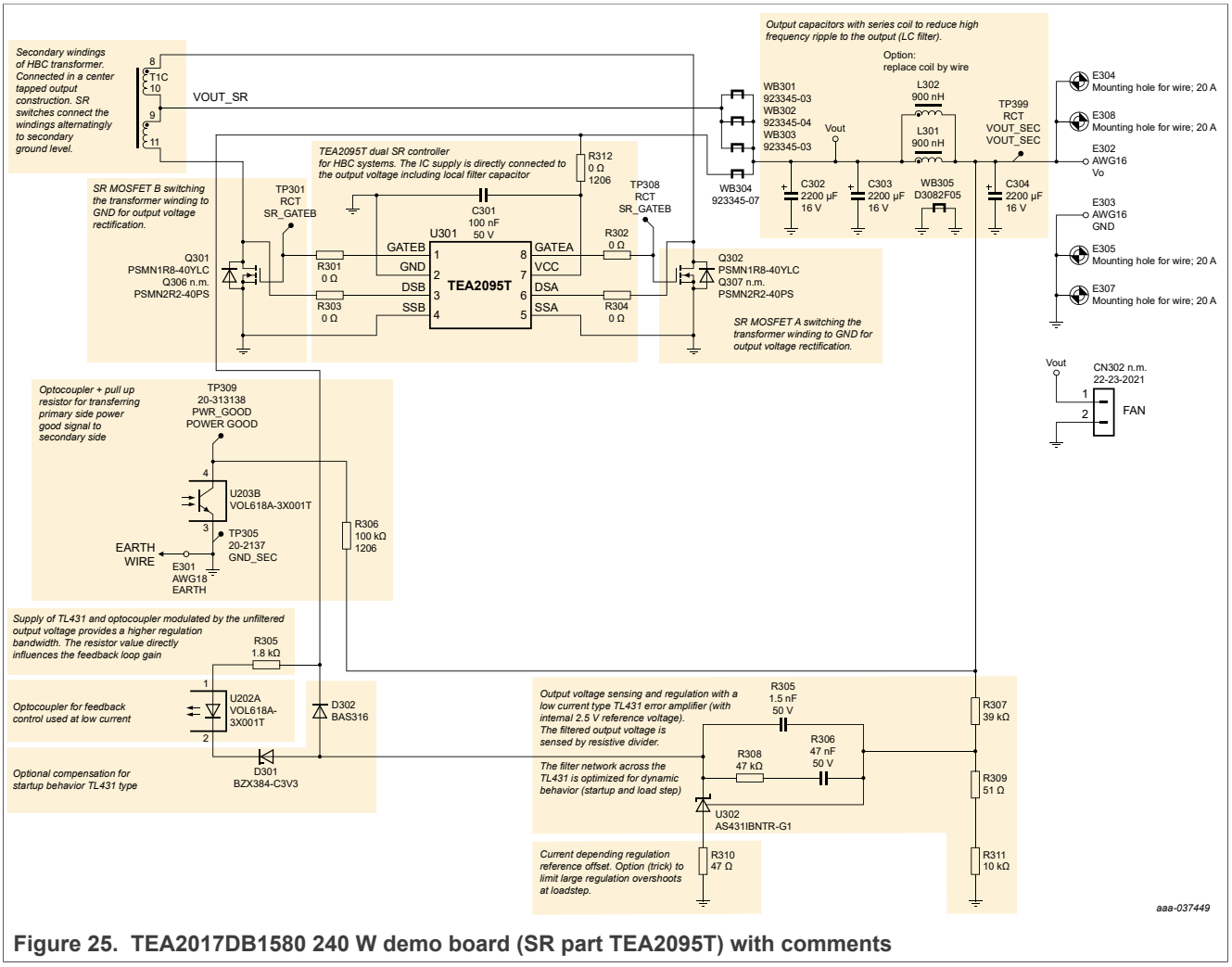

Figure 25. TEA2017DB1580 240 W demo board (SR part TEA2095T) with comments

All information provided in this document is subject to legal disclaimers.

© NXP B.V. 2022. All rights reserved.

9 Bill of materials (BOM)

Table 6. TEA2017DB1580 bill of materials

Reference	Description and values	Part number	Manufacturer
BD101	bridge rectifier; 600 V; 8 A	GBU806	Diode Inc.
C103	capacitor; not mounted; 1 µF; 10 %; 450 V; PET; THT	ECQE2W105KH	Panasonic
C104	capacitor; 470 nF; 10 %; 450 V; PET; THT	ECQE2W474KH	Panasonic
C105	capacitor; not mounted; 470 nF; 10 %; 450 V; PET; THT	ECQE2W474KH	Panasonic
C106	capacitor; 1 µF; 10 %; 450 V; PET; THT	ECQE2W105KH	Panasonic
C107	capacitor; 47 pF; 5 %; 1 kV; C0G; 1206	GRM31A5C3A470JW01D	Murata
C108	capacitor; 470 pF; 10 %; 50 V; X7R; C0G; 0603	-	-
C111	capacitor; 470 pF; 10 %; 50 V; C0G; 0603	-	-
C112	capacitor; 470 pF; 10 %; 50 V; X7R;	-	-
C114	capacitor; 1 nF; 10 %; 50 V; X7R; 0603	-	-
C115	capacitor; 180 µF; 20 %; 450 V; ALU; THT	450QXW180MEFC18X45	Rubycon
C201; C202	capacitor; 330 pF; 5 %; 1 kV; C0G; 1206	102R18N331JV4E	Johanson Dielectrics
C206	capacitor; 47 µF; 20 %; 35 V; ALU; THT	35ZLJ47MTA5X11	Rubycon
C207	capacitor; 6.8 nF; 5 %; 50 V; X7R; 0603	C1608C0G1H682J080AA	TDK
C208	capacitor; 33 pF; 5 %; 1 kV; C0G; 1206	GRM31A5C3A330JW01D	Murata
C209	capacitor; 1 nF; 5 %; 1 kV; C0G; 1812	CC1812JKNPOCBN102	Yageo
C210	capacitor; 2.2 nF; 10 %; 50 V; X7R; 0603	-	-
C211	capacitor; 33 nF; 20 %; 1 kV; MKP	BFC233810333	Vishay
C213	capacitor; 330 nF; 10 %; 50 V; X7R; 0805	-	-
C214; C301	capacitor; 100 nF; 10 %; 50 V; X7R; 0603	-	-
C216	capacitor; 10 nF; 10 %; 500 V; X7R; 1812	C1812C103KCRACTU	KEMET
C219	capacitor; 1.2 nF; 5 %; 100 V; C0G; 0603	C0603C122J1GACTU	KEMET
C220	capacitor; not mounted; 47 nF; 5 %; 1 kV; MKP	BFC237520473	Vishay
C221	capacitor; 10 nF; 10 %; 50 V; X7R; 0805	-	-
C302; C303; C304	capacitor; 2200 µF; 20 %; 16 V; ALU; THT	16ZLH2200MEFC12.5X20	Rubycon
C305	capacitor; 1.5 nF; 10 %; 50 V; X7R; 0603	-	-
C306	capacitor; 47 nF; 10 %; 50 V; X7R; 0603	-	-
CN302	header; straight; not mounted; 1x2-way; 2.54 mm	22-23-2021	Molex
CX101; CX102	capacitor; 470 nF; 20 %; 310 V (AC); MKP; THT	BFC233922474	Vishay
CY101; CY102	capacitor; 2.2 nF; 20 %; 500 V (AC); Y5V; THT	VY1222M37Y5VQ63V0	Vishay
CY201	capacitor; 2.2 nF; 20 %; 250 V; CER; THT	VY1222M47Y5UQ63V0	Vishay

All information provided in this document is subject to legal disclaimers.

© NXP B.V. 2022. All rights reserved.

Table 6. TEA2017DB1580 bill of materials*...continued*

Reference	Description and values	Part number	Manufacturer
D102	diode; 600 V; 3 A	MURS360T3G	On Semi
D103; D201; D202; D209; D302	diode; 100 V; 250 mA	BAS316	Nexperia
D104	diode; 85 V; 200 mA	BAS416	Nexperia
D105	diode; 1 kV; 3 A	1N5408	Vishay
D108	diode; 600 V; 8 A	BYC8X-600	WeEn Semiconductors
D204; D205	diode; 140 V; 1 A	ES1D-E3	Vishay
D206	diode; 600 V; 1 A	MURS160	Vishay
D207; D208	diode; not mounted; 100 V; 250 mA	BAS316	Nexperia
D301	diode; Zener diode; 3.3 V; 250 mA	BZX384-C3V3	Nexperia
F101	fuse; slow blow; 300 V (AC); 4 A	SS-5H-4A-APH	Cooper Bussmann
F102	fuseholder; 5 mm × 20 mm	MC000827	Multicomp
GDT1; GDT3; GDT5	gas discharge tube; not mounted; 200 V; THT	DSP-201M	Mitsubishi
GDT2; GDT4; GDT6	gas discharge tube; not mounted; 200 V; SMT	2051-20-SM-RPLF	Bourns
HS101	heat sink; primary	DB1580-HS01	NXP Semiconductors
L103	inductor; 100 µH; 5 A	7447070	Würth Elektronik
L105	inductor; 600 µH; 8.5 A	750318456rev1	Würth Elektronik
L301; L302	inductor; 900 nH	APS-13903-NL	Axis Power
LF102	inductor; common mode; 6.8 mH; 3.2 A	B82734R2322B30	EPCOS
MCL2; MCL3; MCL4; MCL5; MCL6	fixing kit; nut and bolt	MK3311	Multicomp
MCL7; MCL8; MCL9; MCL10; MCL11	screw; CSK; POZI; M3X10	M3 10 KRSTMC Z100	TR FASTENINGS
MCL12	fuseholder cover; not mounted; 5 mm × 20 mm	MC000833	Multicomp
MCL13	terminal block; not mounted; BL 5.08/2	1716320000	Weidmüller

All information provided in this document is subject to legal disclaimers.

© NXP B.V. 2022. All rights reserved.

Table 6. TEA2017DB1580 bill of materials*...continued*

Reference	Description and values	Part number	Manufacturer
MCL14	fuse; not mounted; time delay; 5 mm × 20 mm; 4 A; 250 V	MC000840	Multicomp
Q101; Q201; Q202	MOSFET-N; 650 V; 20.2 A	IPA60R190P6	Infineon
Q203	MOSFET-N; 60 V; 300 mA	2N7002	Nexperia
Q301; Q302	MOSFET-N; 40 V; 100 A	PSMN1R8-40YLC	Nexperia
Q306; Q307	MOSFET-N; not mounted; 40 V; 100 A	PSMN2R2-40PS	Nexperia
R101; R102	resistor; 10 MΩ; 1 %; 250 mW; 500 V; 1206	KTR18EZPF1005	ROHM
R103; R120; R291; R292; R301; R302; R303; R304	resistor; jumper; 0 Ω; 63 mW; 0603	-	-
R104	resistor; 20 Ω; 1 %; 63 mW; 0603	-	-
R106	resistor; 470 Ω; 1 %; 250 mW; 1206	-	-
R107	resistor; 0.033 Ω; 1 %; 1 W; 2512	RL2512FK-070R033L	Yageo
R108	resistor; 0.47 Ω; 1 %; 1 W; 2512	RL2512FK-070R47	Yageo
R113	resistor; NTC; 100 kΩ; 5 %; 100 mW; 4190 K	NTCLE100E3104JB0	Vishay
R114	resistor; 750 kΩ; 1 %; 250 mW; 1206	-	-
R115; R116	resistor; 7.5 MΩ; 1 %; 250 mW; 500 V; 1206	KTR18EZPF7504	ROHM
R118	resistor; 100 kΩ; 1 %; 63 mW; 0603	-	-
R123	resistor; not mounted; 220 kΩ; 1 %; 63 mW; 0603	-	-
R124; R196; R197; R199; R293; R294; R297; R312	resistor; jumper; 0 Ω; 250 mW; 1206	-	-
R127; R128	resistor; not mounted; 10 MΩ; 1 %; 250 mW; 500 V; 1206	KTR18EZPF1005	ROHM
R194; R195	resistor; 1 MΩ; 1 %; 63 mW; 0603	-	-

All information provided in this document is subject to legal disclaimers.

© NXP B.V. 2022. All rights reserved.

Table 6. TEA2017DB1580 bill of materials*...continued*

Reference	Description and values	Part number	Manufacturer
R198; R295; R296; R298; R299	resistor; jumper; not mounted; 0 Ω; 250 mW; 1206	-	-
R201; R203	resistor; 22 Ω; 1 %; 63 mW; 0603	-	-
R202	resistor; 10 Ω; 1 %; 250 mW; 1206	RC1206FR-0710RL	Yageo
R204	resistor; 10 Ω; 1 %; 63 mW; 0603	-	-
R205; R216	resistor; not mounted; 220 kΩ; 1 %; 63 mW; 0603	-	-
R208	resistor; 2.2 MΩ; 1 %; 250 mW; 500 V; 1206	KTR18EZPF2204	ROHM
R209	resistor; 2.7 MΩ; 1 %; 250 mW; 500 V; 1206	KTR18EZPF2704	ROHM
R210	resistor; 5.6 Ω; 1 %; 63 mW; 0603	-	-
R215	resistor; 20 kΩ; 1 %; 63 mW; 0603	-	-
R229	resistor; 100 Ω; 1 %; 63 mW; 0603	-	-
R230; R307	resistor; 39 kΩ; 1 %; 63 mW; 0603	-	-
R231	resistor; 10 MΩ; 1 %; 63 mW; 0603	-	-
R305	resistor; 1.8 kΩ; 1 %; 63 mW; 0603	-	-
R306	resistor; 100 kΩ; 1 %; 250 mW; 1206	-	-
R308	resistor; 47 kΩ; 1 %; 63 mW; 0603	-	-
R309	resistor; 51 Ω; 1 %; 63 mW; 0603	-	-
R310	resistor; 47 Ω; 1 %; 63 mW; 0603	-	-
R311	resistor; 10 kΩ; 1 %; 63 mW; 0603	-	-
T1	transformer; ETD34	750315374	Würth Elektronik
TP102; TP105; TP108; TP198; TP199; TP206; TP209; TP210; TP211; TP213; TP214; TP215; TP216; TP297; TP298; TP299; TP301; TP308	test point; not mounted; 0805	RCT-0C	TE Connectivity

All information provided in this document is subject to legal disclaimers.

© NXP B.V. 2022. All rights reserved.

Table 6. TEA2017DB1580 bill of materials*...continued*

Reference	Description and values	Part number	Manufacturer
TP103; TP212	test point; not mounted; 0603	RCU-0C	TE Connectivity
TP196; TP197; TP310	test point; not mounted; isolated; 1.02 mm; red	20-313137	Vero Technologies
TP305	test point; not mounted; isolated; 1.02 mm; black	20-2137	Vero Technologies
TP309	test point; not mounted; isolated; 1.02 mm; green	20-313138	Vero Technologies
U1	PFC + LLC controller	TEA2017AATdev	NXP Semiconductors
U202; U203	optocoupler; NPN; 80 V; 60 mA	VOL618A-3X001T	Vishay
U301	synchronous rectifier Controller; dual	TEA2095T	NXP Semiconductors
U302	regulator; AS431	AS431IBNTR-G1	Diodes Inc.
WB101; WB106; WB110	wire bridge; 0.8 mm; P = 12.10 mm	923345-05	3M
WB102; WB201	wire bridge; 0.8 mm; P = 25.40 mm	923345-10	3M
WB103; WB109	wire bridge; 0.8 mm; P = 15.24 mm	923345-06	3M
WB104	wire bridge; 0.8 mm; P = 5.08 mm	923345-02	3M
WB105; WB203; WB302	wire bridge; 0.8 mm; P = 10.16 mm	923345-04	3M
WB107; WB305	wire bridge; bare; 1 mm; P = 10.16 mm	D3082F05	Harwin
WB108; WB304	wire bridge; 0.8 mm; P = 17.18 mm	923345-07	3M
WB202; WB204; WB205; WB301; WB303	wire bridge; 0.8 mm; P = 7.62 mm	923345-03	3M
X101	header; straight; 1 x 3-way; 2.54 mm	22-11-2032	Molex
X102	receptacle; not mounted; R/A; 4 mm; 1 × 2-way; red; 10 A	571-0500-01	Deltron Components Ltd.
X103	receptacle; not mounted; R/A; 4 mm; 1 × 2-way; black; 10 A	571-0100-01	Deltron Components Ltd.
X104	header; not mounted; terminal block; 1 × 2-way; 5.08 mm	1508060000	Weidmüller

All information provided in this document is subject to legal disclaimers.

© NXP B.V. 2022. All rights reserved.

10 PCB layout

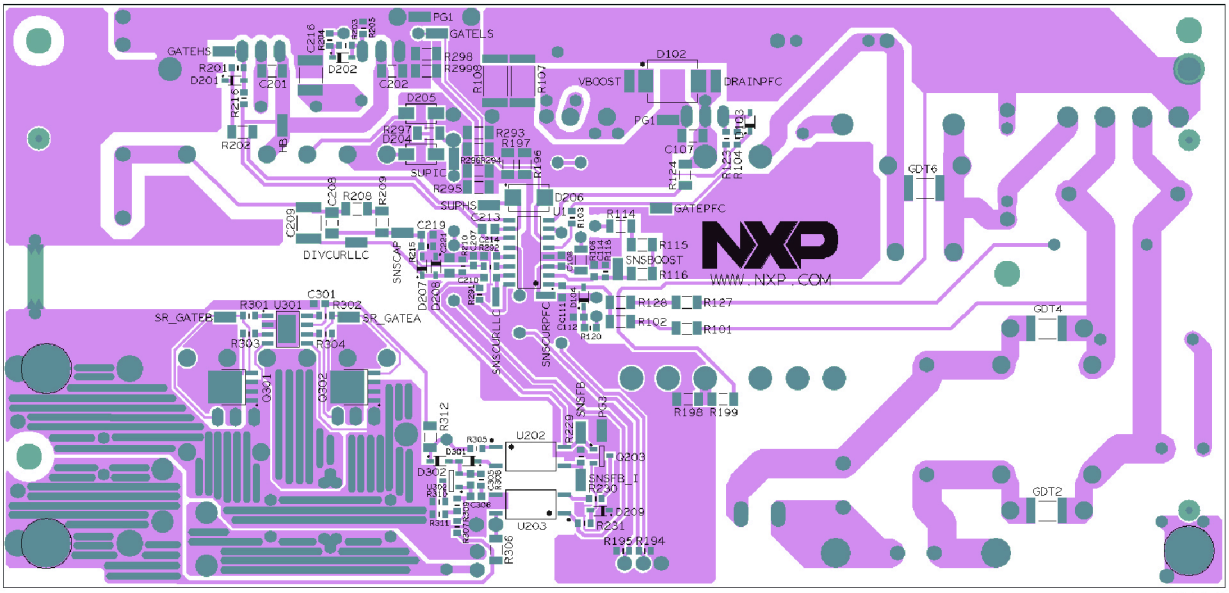

aaa-037452

a. PCB layout

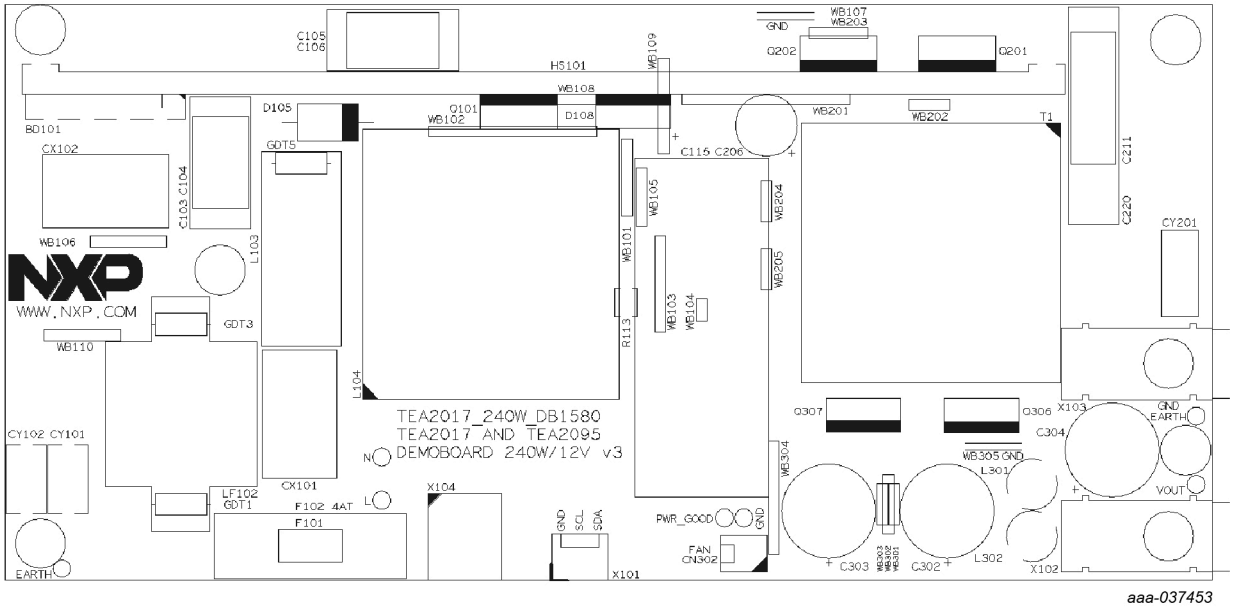

aaa-037453

b. PCB components

Figure 26. TEA2017DB1580 PCB layout and components

Board dimensions:

- Length = 168 mm
- Width = 80 mm
- Thickness copper layer = 75 µm
- Number of copper layers = 1

All information provided in this document is subject to legal disclaimers.

© NXP B.V. 2022. All rights reserved.

11 Transformer specifications

11.1 LLC transformer

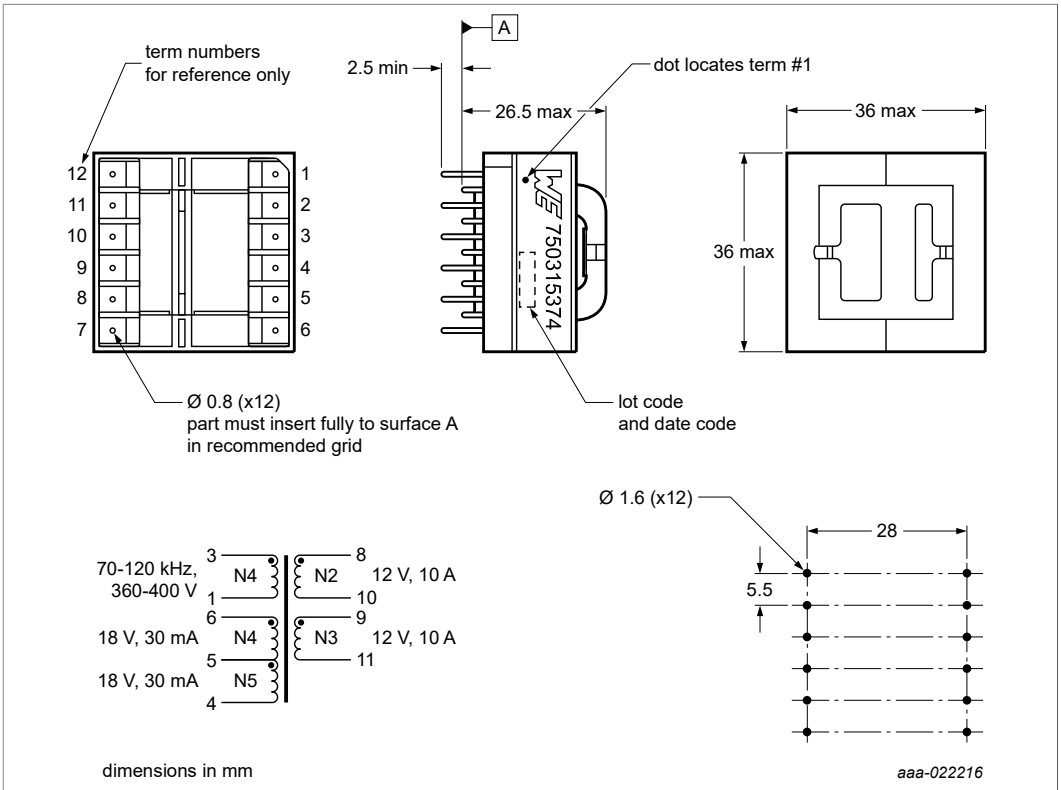

Figure 27. LLC transformer

Table 7. LLC transformer specifications

Parameter	Values	Test conditions
DC resistance; 3-1	0.152 Ω; ±10	at 20 °C
DC resistance; 8-10	maximum 0.005 Ω	at 20 °C
DC resistance; 9-11	maximum 0.005 Ω	at 20 °C
DC resistance; 6-5	0.122 Ω; ±10 %	at 20 °C
DC resistance; 5-4	0.122 Ω; ±10 %	at 20 °C
inductance; 3-1	600 µH; ±10 %	10 kHz; 100 mV; L_s
saturation current; 3-1	1.7 A	20 % roll-off from initial
leakage inductance; 3-1	100 µH; ±10 %	tie(4+5+6, 8+9+10+11); 100 kHz; 100 mA; L_s
dielectric; 1-11	3200 V (AC); 1 minute	tie(3=4, 10+11); 4000 V (AC); 1 s

All information provided in this document is subject to legal disclaimers.

© NXP B.V. 2022. All rights reserved.

11.2 PFC coil

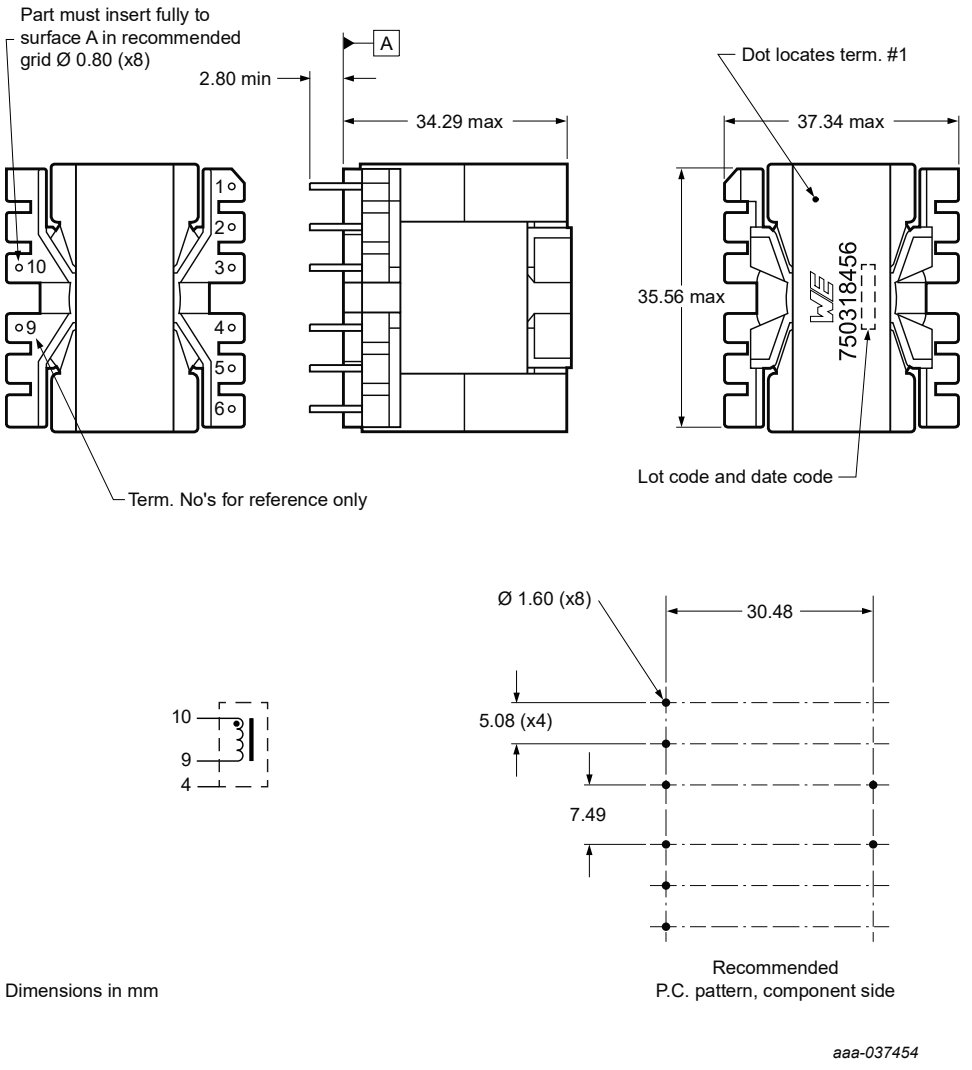

Note: *Pin 4 is connected to the core.*

Figure 28. PFC coil

All information provided in this document is subject to legal disclaimers.

© NXP B.V. 2022. All rights reserved.

Table 8. PFC coil specifications

Parameter	Value	Conditions
Electric specifications		
DC resistance; 9-10	0.24 Ω; ±10 %	at 20 °C
inductance; 9-10	600 µH; ±10 %	10 kHz; 100 mV; L_s
saturation current; 9-10	8.25 A	20 % roll-off from initial
General specifications		
operating temperature	−40 °C to +125 °C	including temperature rise

All information provided in this document is subject to legal disclaimers.

© NXP B.V. 2022. All rights reserved.

12 TEA2017AAT parameter settings

Section 12 shows a list of the parameters in the MTP. It shows the Ringo GUI parameter names, the NXP Semiconductors parameter names, and their values.

The Ringo GUI export function can generate a list with the MTP settings of an IC. It provides an overview of the selected values and can be used for comparison, checking, or sharing the information. In addition to this list, the settings can be stored as a .mif file. This file can be reloaded in the Ringo GUI software later or shared to others.

Table 9. Ringo parameter/IC parameter settings

	Ringo parameter name	IC parameter name	Value	Unit	Binary value
1	NXP ID code	nxp_id_code	0x02	-	2
2	PFC OCP	pfc_ocp	OK	-	0
3	PFC OVP (DRAINPFC)	pfc_ovp_pfcdrain	OK	-	0
4	PFC OVP (SNSBOOST)	pfc_ovp_snsboost	OK	-	0
5	LLC OPP 1	llc_opp1	OK	-	0
6	LLC OPP 2	llc_opp2	OK	-	0
7	LLC maximum start-up time	llc_max_startup_time	OK	-	0
8	LLC OCP	llc_ocp	OK	-	0
9	LLC OVP	llc_ovp_prot	OK	-	0
10	External OTP	ext_otp	OK	-	0
11	Internal OTP	int_otp	OK	-	0
12	Fast disable	fast_disable	OK	-	0
13	LLC maximum on-time	llc_max_on_time	OK	-	0
14	LLC maximum Iopto	llc_max_iopto	OK	-	0
15	LLC capacitive mode	llc_cap_mode	OK	-	0
16	MTP read failure	mtp_read_fail	OK	-	0
17	OPP via SUPIC UVP	opp_via_supic_uvp	OK	-	0
18	PFC soft-start time	t_start	25	ms	0
19	PFC gain	pfc_gain	0.5	-	8
20	PFC current scaler	pfc_cur_scaler	1.138	-	4
21	Write lock	write_lock	write enabled	-	0
22	Read lock	read_lock	read enabled	-	0
23	PFC burst mode level	pfc_burstmode_lvl	50	%	0
24	PFC burst mode level hysteresis	pfc_burstmode_lvl_hyst	25	%	0
25	PFC burst mode SNSBOOST ripple	vburst_ripple	70	mV	1
26	PFC minimum off-time	tmin_off	500	ns	0
27	Brownin level	brownin_lvl	5.5	µA	0
28	Brownin/brownout hysteresis	brownin_hys	0.75	µA	0
29	Brownout delay	t_brownout	50	ms	0

All information provided in this document is subject to legal disclaimers.

© NXP B.V. 2022. All rights reserved.

Table 9. Ringo parameter/IC parameter settings*...continued*

	Ringo parameter name	IC parameter name	Value	Unit	Binary value
30	PFC valley detection	pfc_valley_disable	enabled	-	0
31	dV/dt ratio switch-on/maximum	ratio_valley_detect	0.5	-	0
32	Mains resistor value	rmains	20	MΩ	0
33	PFC minimum switching frequency	min_pfc_freq	40	kHz	0
34	PFC maximum switching frequency	max_pfc_freq	75	kHz	1
35	PFC mode	pfc_mode	DCM/QR/CCM	-	1
36	PFC jitter frequency modulation	freq_jitter_mod	disabled	-	0
37	PFC jitter frequency amplitude	freq_jitter_ampl	15	%	0
38	PFC gamma value	pfc_gamma	0x24	-	36d
39	Mains SNS resistors	nr_mains_resistors	1	resistor	0
40	PFC phase factor	pfc_phase	0.9375	-	15d
41	LLC soft-start speed	llc_tsoftstart	7	X	0
42	SUPIC control near UVP	dis_vlow	enabled	-	0
43	SUPIC start level	sup_start	19	V	0
44	LLC converter	llc_disable	enabled	-	0
45	Vdump level	vdump	2.55	V	1
46	Capacitive mode regulation level	capm_lvl	100	mV	0
47	Maximum on-time	llc_max_on	20	µs	0
48	LLC LP mode	lpmode_dis	enabled	-	0
49	OTP/external burst mode select	ext_burstmode	Ext OTP	-	0
50	LLC non-overlap mode	llc_non_overlap	adaptive	-	0
51	Maximum non-overlap time	t_no_max	1.1	µs	0
52	Minimum non-overlap time	t_no_min	230	ns	0
53	Opto current level	iopto	80	µA	0
54	Burst-on end by opto current	iopto_bm_end	2.5	-	0
55	SNSBOOST compensation	snsb_comp	−1.4	-	0
56	HP-LP transition level	hp_lp_lev	30	%	0
57	HP-LP hysteresis	hp_lp_hys	20	%	0
58	Opto regulation gain increase	opto_reg_gain_incr	96	-	0
59	LP number of peaks	lp_nr_peaks	2	-	0
60	LP-BM transition level	lp_bm_lev	10	%	0
61	BM-LP hysteresis	bm_lp_hys	50	%	7
62	BM LP hysteresis filter	bm_lp_filt	4	-	0
63	LP-BM delay time	lp_bm_del	0	s	0
64	Zero power slope	min_slope	6	mV/µs	0
65	dVcap offset	vcap_offset	0	mV	0

All information provided in this document is subject to legal disclaimers.

© NXP B.V. 2022. All rights reserved.

Table 9. Ringo parameter/IC parameter settings*...continued*

	Ringo parameter name	IC parameter name	Value	Unit	Binary value
66	BM frequency	bm_freq	800	Hz	0
67	BM energy-per-cycle increase	bm_incr	1	-	0
68	Minimum cycles in burst	min_nr_cycl	3	-	0
69	Number of BM soft-start cycles	nr_bm_sstart	2	-	2
70	Number of BM soft-stop cycles	nr_bm_sstop	2	-	2
71	Burst mode exit delay	bm_exit_del	4000	µs	0
72	Allow CCM at demag timeout	allow_ccm_demag_to	disable	-	0
73	PFC current gain	pfc_cur_gain	344	-	344d
74	Slope of 4th BM soft-start cycle	start_cycle4	2	-	0
75	Slope of 3rd BM soft-start cycle	start_cycle3	6	-	0
76	Slope of 2nd BM soft-start cycle	start_cycle2	10	-	5
77	Slope of 1st BM soft-start cycle	start_cycle1	96	-	0
78	Slope of 4th BM soft-stop cycle	stop_cycle4	96	-	0
79	Slope of 3rd BM soft-stop cycle	stop_cycle3	24	-	0
80	Slope of 2nd BM soft-stop cycle	stop_cycle2	10	-	4
81	Slope of 1st BM soft-stop cycle	stop_cycle1	4	-	2
82	External OTP current level	eotp_lvl	600	µA	0
83	External OTP delay time	t_eotp	4	s	0
84	OTP mode	otp_ltch	safe restart	-	0
85	OTP number of restarts to latch	otp_nr_rest	0	-	0
86	Fast disable by SNSBOOST	llc_fast_disable	latched	-	3
87	X-cap discharge delay time	t_xcap_disch	200	ms	0
88	Fast latch reset delay time	t_flr	50	ms	0
89	Safe restart timer	sr_time	1	s	0
90	PFC OVP level (SNSBOOST)	ovp_lvl	2.63	V	0
91	PFC OVP (DRAINPFC)	ovpprot_lvl	475	V	0
92	OVP-DRAINPFC protection delay	t_ovpprot	250	cycles	0
93	OVP-DRAINPFC mode	ovp_ltch	safe restart	-	0
94	OVP-DRAINPFC no. of restarts	ovp_nr_rest	0	-	0
95	PFC short-winding delay	pfc_shortwinding_delay	5000	-	0
96	PFC maximum ringing time	max_tring_pfc	7	µs	3
97	LLC soft-start current limit	max_llc_istartup	0.75	V	0
98	Maximum (start-up) frequency	max_llc_freq	350	kHz	0
99	Maximum start-up time	t_start_max	100	ms	0
100	LLC maximum ringing time	max_tring_llc	5	µs	0
101	LLC OCP filter	llc_tocp	5	-	0

All information provided in this document is subject to legal disclaimers.

© NXP B.V. 2022. All rights reserved.

Table 9. Ringo parameter/IC parameter settings*...continued*

	Ringo parameter name	IC parameter name	Value	Unit	Binary value
102	LLC OCP mode	llc_ocp_ltch	safe restart	-	0
103	OCP restarts to latch	llc_ocp_nr_rest	0	-	0
104	LLC (SUPIC) OVP level	llc_ovp	10	V	0
105	LLC (SUPIC) OVP delay	llc_tovp	50	µs	0
106	Down-counts/up-count (SUPIC) OVP	llc_ovp_nr_dwn	1	-	0
107	(SUPIC) OVP mode	llc_ovp_ltch	safe restart	-	0
108	OVP restarts to latch	llc_ovp_nr_rest	0	-	0
109	LLC brownin level (SNSBOOST)	snsb_start	2.3	V	6
110	LLC brownout level (SNSBOOST)	snsb_stop	1.65	V	3
111	Disable LLC after SNSBOOST OVP	dis_ovp_snsb	off	-	3
112	Disable LLC after mains brownout	llc_dis_bo	250	ms	0
113	OPP1 level	opp1_lvl	−20	%	0
114	OPP1 time delay	opp1_time	50	ms	0
115	OPP2 level	opp2_lvl	−10	%	0
116	OPP2 time delay	opp2_time	infinite	-	0
117	Down-counts/up-count OPP	opp_nr_dwn	1	-	0
118	OPP mode	opp_ltch	safe restart	-	0
119	OPP restarts to latch	opp_nr_rest	0	-	0
120	LLC power limitation level	pow_lim	155	%	0
121	Power good inverted	pgood_inv	disabled	-	0
122	Power good SNSBOOST reset level	pgd_lvl	1.75	V	0
123	Power good at mains brownout	pgd_bo	enabled	-	0
124	Power good at OPP	pgd_opp	enabled	-	0
125	Power good at OTP	pgd_otp	enabled	-	0
126	Power good signal at SNSBOOST OVP	pgd_ovp_sbo	enabled	-	0
127	Power good signal edge (SNSFB)	pgd_tr	1.8	ms	0
128	Power good delay	pgd_del	5	ms	0
129	Power good time to protection	pgd_tim	4	ms	0
130	Vendor code	mtp_code	0	-	0
131	PFC soft-start time burst mode	-	short	-	-
132	PFC soft-stop time burst mode	-	normal	-	-

All information provided in this document is subject to legal disclaimers.

© NXP B.V. 2022. All rights reserved.

13 Appendix: Terms of use

The use of the TEA2017DB1580 Demo Board, including any related software, firmware, additional hardware, and documentation provided by NXP (“Demo Board”) is Your (“Your” or “You”) agreement with NXP Semiconductors Netherlands B.V. (“NXP”) to be bound by these terms of use (“Agreement”). If You do not agree to these terms, You must not use, or must discontinue any use of the Demo Board.

1. **OWNERSHIP AND COPYRIGHT**
   This Agreement does not transfer any ownership interest in the Demo Board. NXP and its suppliers reserve all rights, title, and interest in and to the Demo Board and no other express or implied license, right, or interest in any patent, patent application, copyright, trade secret, trademark, or any other intellectual property right are granted in this Agreement. You agree to prevent any unauthorized copying in whole or in part of the Demo Board.
2. **RESTRICTIONS AND WARNINGS**
   The Demo Board offers limited functionality and is intended only for evaluation and testing of NXP products in a research and development setting.
   The Demo Board is not intended for consumer or household use.
   The Demo Board is not a final product and is not intended for Incorporation into any final product. It is intended solely for evaluation and testing purposes. You may not incorporate the Demo Board, directly or indirectly into any production of Yours.
   If You incorporate the Demo Board into an evaluation system, the evaluation system may be used by You solely for Your evaluation and testing purposes. Your evaluation system may not be offered for sale or lease or sold, leased, or otherwise distributed for commercial purposes and must be accompanied by a conspicuous notice as follows: “This device is not, and may not be, offered for sale or lease, or sold or leased or otherwise distributed for commercial purposes”.
   Your use of the Demo Board is contingent on Your careful review of any related documentation provided by NXP. This documentation contains important warnings. You must comply with all warnings and other instructions and employ reasonable safety precautions in using the Demo Board. Failure to do so may result in death, personal injury, or property damage. If You have any questions regarding the safe usage of the Demo Board, You should contact NXP for guidance.
   Unless You are an NXP authorized distributor, You cannot not sell, assign, sublicense, lease, rent, or otherwise distribute the Demo Board for commercial purposes, in whole or in part. You cannot use, in whole or in part, the Demo Board in a production system.
   Except as provided in this Agreement or as explicitly permitted in the documentation of the Demo Board, You may not reproduce the Demo Board or modify, reverse engineer, decompile, or disassemble its software and/or firmware, in whole or in part.
   The Demo Board is not designed for and may not be used in any safety critical or functional safety testing, including but not limited to testing of life supporting, military, or nuclear applications. NXP expressly disclaims any responsibility for such usage which shall be made at Your sole risk, even if NXP has been informed in writing of such usage. Unless expressly designated in writing by NXP as suitable for use in testing automotive or aerospace applications, You shall not use the Demo Board in such testing.
   Use of any software and/or firmware embedded in or working conjunction with the Demo Board is subject to a separate end user license agreement (“EULA”) that accompanies such software and/or firmware. You may make one copy of the software and/or firmware in the Demo Board only for backup or archival

All information provided in this document is subject to legal disclaimers.

© NXP B.V. 2022. All rights reserved.

purposes provided that You reproduce and apply to such copy any copyright or other proprietary rights notices included on or embedded in the software and/or firmware.

3. **WARRANTY**
   NXP WARRANTS THAT IT HAS THE RIGHT TO PROVIDE THE DEMO BOARD TO YOU. THIS WARRANTY IS PROVIDED BY NXP IN LIEU OF ALL OTHER WARRANTIES, WRITTEN OR ORAL, NXP ATUTORY, EXPRESS OR IMPLIED, INCLUDING ANY WARRANTY AS TO MERCHANTABILITY, NON-INFRINGEMENT, FITNESS FOR ANY PARTICULAR PURPOSE, OR UNINTERRUPTED OR ERROR-FREE OPERATION, ALL OF WHICH ARE EXPRESSLY DISCLAIMED. THE DEMO BOARD IS PROVIDED “AS IS”.
   YOU WARRANT TO NXP THAT YOU WILL ENSURE THAT THE EVALUATION BOARD IS USED ONLY BY ELECTRONICS EXPERTS WHO UNDERSTAND THE DANGERS OF HANDLING AND USING ELECTRICAL MECHANICAL COMPONENTS, SYNXP EMS, AND SUBSYNXP EMS. YOU ASSUME ALL RESPONSIBILITY AND LIABILITY FOR ANY IMPROPER OR UNSAFE HANDLING OR USE OF THE DEMO BOARD BY YOU, YOUR EMPLOYEES, AFFILIATES, CONTRACTORS, AND DESIGNEES.
4. **LIMITATIONS AND LIABILITIES**
   IN NO EVENT WILL NXP OR ITS SUPPLIERS BE LIABLE TO YOU FOR ANY SPECIAL, INDIRECT, CONSEQUENTIAL, PUNITIVE, OR INCIDENTAL DAMAGES (INCLUDING WITHOUT LIMITATION DAMAGES FOR LOSS OF BUSINESS, BUSINESS INTERRUPTION, LOSS OF USE, LOSS OF DATA OR INFORMATION, AND THE LIKE) ARISING OUT OF THIS AGREEMENT OR THE USE OF OR INABILITY TO USE THE DEMO BOARD MATERIALS, WHETHER OR NOT BASED ON TORT (INCLUDING NEGLIGENCE), STRICT LIABILITY, BREACH OF CONTRACT, BREACH OF WARRANTY OR ANY OTHER THEORY, EVEN IF ADVISED OF THE POSSIBILITY OF SUCH DAMAGES. NOTWITHSTANDING ANY DAMAGES THAT LICENSEE MIGHT INCUR FOR ANY REASON WHATSOEVER (INCLUDING, WITHOUT LIMITATION, ALL DAMAGES REFERENCED ABOVE AND ALL DIRECT OR GENERAL DAMAGES), THE ENTIRE LIABILITY OF NXP AND ITS SUPPLIERS UNDER ANY PROVISION OF THIS AGREEMENT AND LICENSEE’S EXCLUSIVE REMEDY FOR ALL OF THE FOREGOING SHALL BE LIMITED TO ACTUAL DAMAGES INCURRED BY LICENSEE BASED ON REASONABLE RELIANCE UP TO THE GREATER OF THE AMOUNT ACTUALLY PAID BY YOU FOR THE DEMO BOARD OR TEN U.S. DOLLARS ($10). THE FOREGOING LIMITATIONS, EXCLUSIONS AND DISCLAIMERS SHALL APPLY TO THE MAXIMUM EXTENT PERMITTED BY APPLICABLE LAW, EVEN IF ANY REMEDY FAILS OF ITS ESSENTIAL PURPOSE.
5. **INDEMNIFICATION**
   You will defend, indemnify and hold NXP and its Affiliates, its licensors, and their representatives harmless from and against any and all claims, damages, losses, expenses, costs, and liabilities arising out of or in connection with any handling or use of the Demo Board that is not in accordance with these terms. You shall pay any resulting costs and damages finally awarded against NXP or its Affiliates or agreed to in any settlement, provided that You have sole control of the defense and settlement of the claim or action, and NXP cooperates in the defense and furnishes all related evidence under its control at Your expense. NXP will be entitled to participate in the defense of such claim or action and to employ counsel at its own expense.
   “Affiliates” means any corporation or other entity directly or indirectly controlled by, controlling or under common control with the entity in question, for so long as such ownership exists. "Control" means the direct or indirect beneficial ownership of more than fifty (50 %) percent of the stock or other equity interests entitled to vote for the election of directors or an equivalent governing body. Any such corporation or other

All information provided in this document is subject to legal disclaimers.

© NXP B.V. 2022. All rights reserved.

legal entity shall be deemed to be an Affiliate of such entity only as long as such Control exists.

6. **APPLICABLE LAW AND JURISDICTION**
   This Agreement is governed by and construed in accordance with the laws of The Netherlands without regard to any principle of conflicts of law. Any dispute arising hereunder shall be resolved in the competent courts in Amsterdam, The Netherlands, and You agree that venue and jurisdiction for any related proceedings lies exclusively with such courts; provided, however, that each party may enforce its and its Affiliates' intellectual property rights in any court, and similar governing body, of competent jurisdiction, including but not limited to equitable relief. The UN Convention on Contracts for the International Sale of Goods shall not apply to this Agreement.
7. **COMPLIANCE WITH LAW**
   You are responsible to comply with all applicable laws and regulations including but not limited to any E.U. Directives or FCC regulations. Each Party shall comply with all applicable laws and regulations, including but not limited to applicable export and import control laws and regulations including but not limited to the US Export Administration Regulation (including restrictions on certain military end uses and military end users as specified in Section 15 C.F.R. § 744.21 and prohibited party lists issued by other federal governments), Catch-all regulations and all national and international embargoes. Each Party further agrees that it will not knowingly transfer, divert, export or re-export, directly or indirectly, any product, software, including software source code, or technology restricted by such regulations or by other applicable national regulations, received from the other party under this Agreement, or any direct product of such software or technical data to any person, firm, entity, country or destination to which such transfer, diversion, export or re-export is restricted or prohibited, without obtaining prior written authorization from the applicable competent government authorities to the extent required by those laws. This provision shall survive termination or expiration of this Agreement.
8. **SEVERABILITY**
   If any provision of this agreement is or becomes, at any time or for any reason, unenforceable or invalid, no other provision of this agreement shall be affected thereby, and the remaining provisions of this agreement shall continue with the same force and effect as if such unenforceable or invalid provisions had not been inserted in this Agreement. In addition, any unenforceable or invalid provision shall be deemed replaced by a provision that is valid and enforceable and that comes closest to expressing the intention of the unenforceable or invalid provision.
9. **WAIVER**
   The waiver by either You or NXP of any breach of any provision of this Agreement will not operate or be construed as a waiver of any other or a subsequent breach of the same or a different provision.
10. **RELATIONSHIPS AND PARTIES**
    Nothing in this Agreement shall create, or be deemed to create, any joint venture, partnership, principal-agent, employer- employee or other relationship between You and NXP, except that of independent contractors. Neither You nor NXP has the authority or power to bind, to contract in the name of, or to create a liability for the other in any way or for any purpose.
11. **TERM AND TERMINATION**
    These terms are effective upon Your purchase or use of the Demo Board whichever is first. Any provision of this Agreement which imposes an obligation after termination of this Agreement shall survive the termination of this Agreement.

All information provided in this document is subject to legal disclaimers.

© NXP B.V. 2022. All rights reserved.

14 Abbreviations

Table 10. Abbreviations

Acronym	Description
BCM	boundary conduction mode
BM	burst mode
CCM	continuous conduction mode
EMI	electromagnetic interference
GUI	graphical user interface
HBC	half-bridge converter
HP	high power
LLC	resonant tank or converter (Lm+Lr+Cr in series)
LP	low power
MOSFET	metal–oxide–semiconductor field-effect transistor
MTP	multi times programmable
OPP	overpower protection
OTP	overtemperature protection
OVP	overvoltage protection
PCB	printed-circuit board
PFC	power factor correction
QR	quasi-resonant (= BCM mode)
SR	synchronous rectification

15 References

[1] **TEA2017AAT data sheet** — Digital controller for high-efficiency resonant power supply; 2021, NXP Semiconductors

[2] **AN13140 application note** — TEA2017 CCM/DCM/QR PFC + LLC controller IC; 2021, NXP Semiconductors

[3] **UM11235 user manual** — TEA2016DB1514 USB to I^2C hardware interface; 2019, NXP Semiconductors

[4] **UM11657 user manual** — TEA2017 Ringo development software with GUI; 2021, NXP Semiconductors

All information provided in this document is subject to legal disclaimers.

© NXP B.V. 2022. All rights reserved.

16 Legal information

16.1 Definitions

Draft — A draft status on a document indicates that the content is still under internal review and subject to formal approval, which may result in modifications or additions. NXP Semiconductors does not give any representations or warranties as to the accuracy or completeness of information included in a draft version of a document and shall have no liability for the consequences of use of such information.

16.2 Disclaimers

Limited warranty and liability — Information in this document is believed to be accurate and reliable. However, NXP Semiconductors does not give any representations or warranties, expressed or implied, as to the accuracy or completeness of such information and shall have no liability for the consequences of use of such information. NXP Semiconductors takes no responsibility for the content in this document if provided by an information source outside of NXP Semiconductors.

In no event shall NXP Semiconductors be liable for any indirect, incidental, punitive, special or consequential damages (including - without limitation - lost profits, lost savings, business interruption, costs related to the removal or replacement of any products or rework charges) whether or not such damages are based on tort (including negligence), warranty, breach of contract or any other legal theory.

Notwithstanding any damages that customer might incur for any reason whatsoever, NXP Semiconductors' aggregate and cumulative liability towards customer for the products described herein shall be limited in accordance with the Terms and conditions of commercial sale of NXP Semiconductors.

Right to make changes — NXP Semiconductors reserves the right to make changes to information published in this document, including without limitation specifications and product descriptions, at any time and without notice. This document supersedes and replaces all information supplied prior to the publication hereof.

Suitability for use — NXP Semiconductors products are not designed, authorized or warranted to be suitable for use in life support, life-critical or safety-critical systems or equipment, nor in applications where failure or malfunction of an NXP Semiconductors product can reasonably be expected to result in personal injury, death or severe property or environmental damage. NXP Semiconductors and its suppliers accept no liability for inclusion and/or use of NXP Semiconductors products in such equipment or applications and therefore such inclusion and/or use is at the customer's own risk.

Applications — Applications that are described herein for any of these products are for illustrative purposes only. NXP Semiconductors makes no representation or warranty that such applications will be suitable for the specified use without further testing or modification.

Customers are responsible for the design and operation of their applications and products using NXP Semiconductors products, and NXP Semiconductors accepts no liability for any assistance with applications or customer product design. It is customer's sole responsibility to determine whether the NXP Semiconductors product is suitable and fit for the customer's applications and products planned, as well as for the planned application and use of customer's third party customer(s). Customers should provide appropriate design and operating safeguards to minimize the risks associated with their applications and products.

NXP Semiconductors does not accept any liability related to any default, damage, costs or problem which is based on any weakness or default in the customer's applications or products, or the application or use by customer's third party customer(s). Customer is responsible for doing all necessary testing for the customer's applications and products using NXP Semiconductors products in order to avoid a default of the applications and the products or of the application or use by customer's third party customer(s). NXP does not accept any liability in this respect.

Terms and conditions of commercial sale — NXP Semiconductors products are sold subject to the general terms and conditions of commercial sale, as published at http://www.nxp.com/profile/terms, unless otherwise agreed in a valid written individual agreement. In case an individual agreement is concluded only the terms and conditions of the respective agreement shall apply. NXP Semiconductors hereby expressly objects to applying the customer's general terms and conditions with regard to the purchase of NXP Semiconductors products by customer.

Export control — This document as well as the item(s) described herein may be subject to export control regulations. Export might require a prior authorization from competent authorities.

Suitability for use in non-automotive qualified products — Unless this data sheet expressly states that this specific NXP Semiconductors product is automotive qualified, the product is not suitable for automotive use. It is neither qualified nor tested in accordance with automotive testing or application requirements. NXP Semiconductors accepts no liability for inclusion and/or use of non-automotive qualified products in automotive equipment or applications.

In the event that customer uses the product for design-in and use in automotive applications to automotive specifications and standards, customer (a) shall use the product without NXP Semiconductors' warranty of the product for such automotive applications, use and specifications, and (b) whenever customer uses the product for automotive applications beyond NXP Semiconductors' specifications such use shall be solely at customer's own risk, and (c) customer fully indemnifies NXP Semiconductors for any liability, damages or failed product claims resulting from customer design and use of the product for automotive applications beyond NXP Semiconductors' standard warranty and NXP Semiconductors' product specifications.

Translations — A non-English (translated) version of a document is for reference only. The English version shall prevail in case of any discrepancy between the translated and English versions.

Security — Customer understands that all NXP products may be subject to unidentified vulnerabilities or may support established security standards or specifications with known limitations. Customer is responsible for the design and operation of its applications and products throughout their lifecycles to reduce the effect of these vulnerabilities on customer's applications and products. Customer's responsibility also extends to other open and/or proprietary technologies supported by NXP products for use in customer's applications. NXP accepts no liability for any vulnerability. Customer should regularly check security updates from NXP and follow up appropriately.

Customer shall select products with security features that best meet rules, regulations, and standards of the intended application and make the ultimate design decisions regarding its products and is solely responsible for compliance with all legal, regulatory, and security related requirements concerning its products, regardless of any information or support that may be provided by NXP.

NXP has a Product Security Incident Response Team (PSIRT) (reachable at PSIRT@nxp.com) that manages the investigation, reporting, and solution release to security vulnerabilities of NXP products.

16.3 Trademarks

Notice: All referenced brands, product names, service names, and trademarks are the property of their respective owners.

NXP — wordmark and logo are trademarks of NXP B.V.

GreenChip — is a trademark of NXP B.V.

All information provided in this document is subject to legal disclaimers.

© NXP B.V. 2022. All rights reserved.

Contents

1 Introduction 3
1.1 Safety warnings 3
1.1.1 Open-framed unenclosed PCB 3
1.1.2 General high-voltage demo board user safety guidelines 3
1.1.3 Safety warning 4
1.2 TEA2017AAT 5
1.3 TEA2095T 6
1.4 Demo board 6
1.5 TEA2017AAT GUI and USB-I2C interface 7
1.5.1 Development IC samples: SDA and SCL on spacer pins 7
1.5.2 Production IC samples: SDA and SCL on combined pins 8
1.6 Graphical user interface (GUI) and USB-I2C interface 9
2 Specifications 10
3 Board photographs 11
4 Performance measurements 12
4.1 Test facilities 12
4.2 Start-up and switch-off behavior 12
4.2.1 Output voltage risetime 12
4.2.2 Start-up time 13
4.2.3 Mains switch-off and X-capacitor discharge 13
4.3 Efficiency 14
4.3.1 Efficiency characteristics 14
4.3.2 No-load power consumption 14
4.3.3 Standby power consumption 14
4.3.4 Power factor 15
4.4 Operation mode transitions 15
4.5 Output voltage ripple 16
4.6 Dynamic load response 17
4.7 Power limit 18
4.8 Overpower protection (OPP) 19
4.9 EMI 20
5 MTP settings 21
6 Thermal information 21
7 Circuit diagrams 22
8 Circuit diagrams with comments 25
9 Bill of materials (BOM) 28
10 PCB layout 33
11 Transformer specifications 34
11.1 LLC transformer 34
11.2 PFC coil 35
12 TEA2017AAT parameter settings 37
13 Appendix: Terms of use 41
14 Abbreviations 44
15 References 44
16 Legal information 45

Please be aware that important notices concerning this document and the product(s) described herein, have been included in section 'Legal information'.

© NXP B.V. 2022. **All rights reserved.**

For more information, please visit: http://www.nxp.com
For sales office addresses, please send an email to: salesaddresses@nxp.com

Date of release: 24 February 2022
Document identifier: UM11397