WITHOUT CPA MOLEX P/N	WITH CPA MOLEX P/N	CIRCUIT SIZE	POLARIZATION	CONNECTOR HOUSING COLOR	TESTED WITH THE FEMALE TERMINAL	CAVITY WITH A NUMBER INDICATIES BLOCKED TERMINAL POSITION CAVITY WITHOUT A NUMBER INDICATIES OPEN TERMINAL POSITION 1	2	3	4	5	6	7	8	TOTAL CIRCUITS PLUGGED	STATUS	WIRE DRESS COVER(OPTIONAL) HORIZONTAL	VERTICAL
31404-9100	31404-9110		A	BLACK										0	SALABLE		
31404-9101	31404-9111		A	BLACK				3						1	SALABLE		
31404-9102	31404-9112		A	BLACK				3	4					2	SALABLE		
31404-9103	31404-9113		A	BLACK		1					6		8	3	SALABLE		
31404-9104	31404-9114		A	BLACK		1	2	3	4					4	SALABLE		
31404-9105	31404-9115		A	BLACK		1	2	3	4		6			5	SALABLE		
31404-9106	31404-9116		A	BLACK			2		4	5	6	7	8	6	SALABLE		
31404-9107	31404-9117		A	BLACK								7	8	2	SALABLE	G1	
31404-9108	31404-9118		A	BLACK						5		7	8	3	SALABLE	G1	
31404-9109	31404-9119		A	BLACK				3	4	5				3	SALABLE	G4	
31404-9121	31404-9131		A	BLACK					4					1	SALABLE		
31404-9122	31404-9132		A	BLACK				3				7		2	SALABLE		
31404-9123	31404-9133		A	BLACK		1		3					8	3	SALABLE		
31404-9124	31404-9134		A	BLACK		1	2				6	7		4	SALABLE		
31404-9125	31404-9135		A	BLACK						5	6	7	8	4	SALABLE	G5	
31404-9126	31404-9136		A	BLACK		1	2	3	4		6	7		6	SALABLE		
31404-9127	31404-9137		A	BLACK					4	5		7		3	SALABLE	G6	
31404-9128	31404-9138		A	BLACK					4	5	6			3	SALABLE	G7	
31404-9129	31404-9139		A	BLACK						5		7		2	SALABLE	G7	
31404-9141	31404-9151		A	BLACK							6			1	SALABLE		
31404-9142	31404-9152		A	BLACK			2				6			2	SALABLE		
31404-9143	31404-9153		A	BLACK		1		3			6			3	SALABLE		
31404-9144	31404-9154		A	BLACK							6	7	8	3	SALABLE	G8 G9	
31404-9161	31404-9171		A	BLACK			2							1	SALABLE		
31404-9162	31404-9172		A	BLACK	TE GEN Y 0.64MM	1	2							2	SALABLE		
31404-9163	31404-9173	1X8	A	BLACK	TERMINAL /YAZAKI	1	2				6			3	SALABLE	31414-8600	31414-8700
31404-9182	31404-9192		A	BLACK	FLX 0.64MM.TERMINAL			3			6			2	SALABLE		
31404-9183	31404-9193		A	BLACK		1			4		6			3	SALABLE	G	
31404-9501	31404-9511		A	LT.GRAY				3						1	SALABLE		
31404-9502	31404-9512		A	BLACK						5	6			2	SALABLE		
31404-9503	31404-9513		A	BLACK		1	2		4					3	SALABLE		
31404-9522	31404-9532		A	BLACK					4			7		2	SALABLE		
31404-9523	31404-9533		A	BLACK		1	2	3						3	SALABLE		
31404-9542	31404-9552		A	BLACK			2	3						2	SALABLE		
31404-9543	31404-9553		A	BLACK			2	3			6			3	SALABLE		
31404-9562	31404-9572		A	BLACK					4	5				2	SALABLE		
31404-9563	31404-9573		A	BLACK			2	3				7		3	SALABLE		
31404-9583	31404-9593		A	BLACK				3				7	8	3	SALABLE		
31404-9584	31404-9594		A	BLACK	G2		2	3				7	8	4	SALABLE		
31404-9200	31404-9210		B	LT.GRAY										0	SALABLE	G3	
31404-9203	31404-9213		B	LT.GRAY	G2			3				7	8	3	SALABLE		
31404-9204	31404-9214		B	LT.GRAY	G2		2	3				7	8	4	SALABLE		
31404-9300	31404-9310		C	DK.GRAY										0	SALABLE		
31404-9400	31404-9410		D	TBD										0	NOT TOOL		
31404-9001	31404-9006		B	BLACK										0	SALABLE	G8	
31404-9002	31404-9007		C	BLACK										0	SALABLE	G8	
31404-9003	31404-9008		C	LT.GRAY										0	SALABLE	G8	
31404-9004	31404-9009		A	DK.GRAY										0	SALABLE	G8	
31404-9005	31404-9010		B	DK.GRAY										0	SALABLE	G8	
31404-9184	31404-9595		A	BLACK							6		8	2	SALABLE		
31404-9586	31404-9596		A	BLACK								7		1	SALABLE	G11	

NOTES: VALID UNLESS OTHERWISE SPECIFIED

1. GENERAL:
a. APPLICATION SPECIFICATION SEE: AS-31402-000
- DESIGNED TO MATE WITH DEVICE CONNECTION AS SPECIFIED IN USCAR INTERFACE DRAWING FOR SINGLE ROW SEALED 0.64 SYSTEMS. 064-S-008-1-Z02.
- ASSEMBLY SHIPPED WITH TPA IN PRE-SET POSITION (SEE SECTION Z-Z) UPON FULL TERMINAL ASSEMBLY, TPA MUST BE SNAPPED INTO ITS FINAL LOCK POSITION AFTER TERMINALS ARE ASSEMBLED (SEE SECTION Y-Y)
- TPA'S MAY BECOME SEATED DURING TRANSIT. IF THIS OCCURS, TPA'S SHOULD BE MOVED TO THE PRE-LOCKED POSITION PRIOR TO FEMALE TERMINAL INSTALLATION.
REFERENCE PRODUCT SPECIFICATION: PS-34646-001.
- SYSTEM TO BE USED WITH WIRE WITHIN RANGE OF:
>SAE 22 AWG TO 18 AWG
>ISO 0.35MM² TO 0.75MM² PER GMW156256
>CABLE OUTSIDE DIAMETER: FROM 1.2MM TO1.9 MM
b. PRODUCT SPECIFICATION SEE: PS-31404-001
c. PACKAGING SPECIFICATION PER MOLEX DRAWING: PK-31300-256
d. PARTS MUST BE IN COMPLIANCE TO MOLEX CHEMICAL SUBSTANCES FOR PRODUCTS AND PACKAGING SPECIFICATION: ES-40000-5016
e. DATA MUST BE SUBMITTED UNDER THE MOLEX PART NUMBER TO IMDS (COMPANY ID#13255)

2. DESIGN - MATERIALS:
a. SEE BOM TABLE IN PAGE 2

3. DESIGN - GEOMETRY:
a. THIS IS A 100% CAD GENERATED PART. THE CAD MATHEMATICAL DATA IS THE MASTER FOR THIS PART. FOR DIMENSIONAL OR ANY INFORMATION
b. DATE CODE: FIRST TWO DIGITS ARE THE CALENDAR YEAR (EXAMPLE: 13 = 2013). THIRD THROUGH 5TH DIGIT DAY # OF THE CALENDAR YEAR (EXAMPLE: FEB. 3RD = '034').
c. VISUAL DEFECTS SHALL MEET COSMETIC STANDARD PS-45499-002 (Class B)

TABLE OF CONTENTS	
SHEET NO.	SHEET DESCRIPTION
1	NOTE
2	BOM
3	KEY CONFIGURATION
4	WIRE DRESS COVER ASSEMBLY

PART NUMBER LEGEND
CONNECTOR ASSEMBLY
31404-9XXX

- 0 - ALL CIRCUITS OPEN
  1-9 - SEE CHART
- CPA OPTION
  0, 2, 4, 6 OR 8 WITHOUR CPA
  1, 3, 5, 7 OR 9 WITH CPA
- POLARIZATION OPTION
  1 OR 5- POLARIZATION A
  2 OR 6- POLARIZATION B
  3 OR 7- POLARIZATION C
  4 OR 8- POLARIZATION D

G12	REMOVE 31404-9585, ADD 31404-9184 BACK
G11	ADD P/N: 31404-9585/9595, 31404-9586/9596; Delete 31404-9184/9194
G10	ADD P/N: 31404-9184/9194
G9	UPDATE CONFIGURATION FOR P/N 31404-9144/9154
G8	ADD P/N: 31404-9001 TO 9010, 31404-9144/9154
G7	ADD P/N: 31404-9128/9138, 31404-9129/9139
G6	ADD P/N: 31404-9127/9137
G5	ADD P/N: 31404-9125/9135
G4	ADD P/N: 31404-9109/9119
G3	ADD P/N: 31404-9203/9213, DELETE OBSOLETE P/Ns (31404-8XXX)
G2	UPDATE COLOR DESCRIPTION
G1	ADD P/N: 31404-9107/9117, 31404-9108/9118
G	OBSOLETE P/N 31404-8XXX ADD NEW P/N 31404-9501/31404-9511
F	ADD P/N 31404-9583/9593, 31404-9584/9594 AND 31404-9204/9214 CHANGE STATUS FROM "TOOED" TO "SALABLE"
E6	CHANGE P/N 31401-9101 TO 31404-9101
E3	ADD P/N: 31404-8563/8573 AND 31404-9563/9573
E2	ADD P/N: 31404-8126/8136 AND 31404-9126/9136
E1	ADD P/N: 31404-8106/8116 AND 31404-9106/9116
E	ADD P/N:31404-9XXX BASED ON THE PRODUCT UPGRADE
D3	ADD P/N: 31404-8562, 31404-8572,
D2	ADD P/N: 31404-8161 AND 31404-8171 31404-8542 AND 31404-8552 AND MANUFACTURING LOCATION ID
D1	ADD P/N: 31404-8522 AND 31404-8532
D	ADD P/N: 31404-8502 AND 31404-8512
C2	UPDATE NOTE 1_a ADD TE TERMINAL IN THE LIST
C1	UPDATE TERMINAL AND WIRE INFORMATON
C	ADD WIRE DRESS CONVER P/N.
B	ADD P/N
A	INITIAL RELEASE SAP # 10647976
REV	REV DESCRIPTION

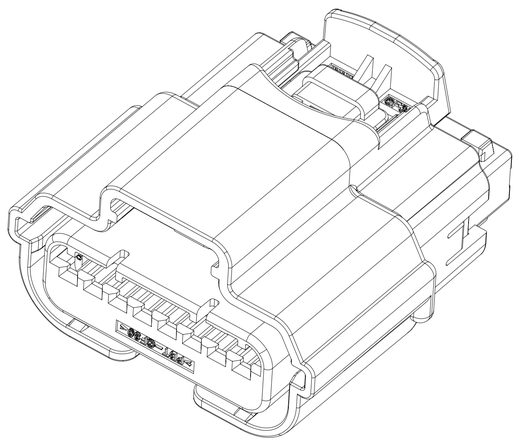

WITH CPA

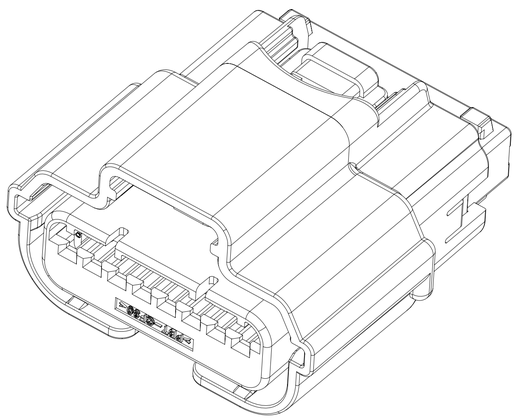

WITHOUT CPA

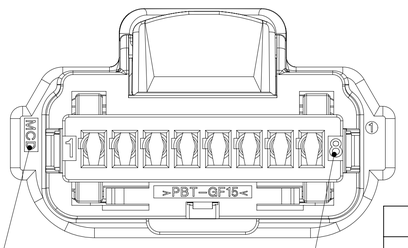

MANUFACTURING LOCATION ID

CIRCUIT ID

INSPECTION BALLOON NUMBER LOG
PER DRAWING REVISION: F
LAST BALLOON NUMBER USED: 4
ADDED BALLOON NUMBERS:
REMOVED BALLOON NUMBERS:

SYMBOLS	
A = 0	
C = 0	
D = 0	
S = 0	
= 0	
C = 0	
= 0	
= 0	
V = 0	

THIS DRAWING CONTAINS INFORMATION THAT IS PROPRIETARY TO MOLEX ELECTRONIC TECHNOLOGIES, LLC AND SHOULD NOT BE USED WITHOUT WRITTEN PERMISSION

DIMENSION UNITS	SCALE
mm	4:1

GENERAL TOLERANCES (UNLESS SPECIFIED)		
ANGULAR TOL	±	0.5 °
4 PLACES	±	0
3 PLACES	±	0
2 PLACES	±	0
1 PLACE	±	0
0 PLACES	±	0

DRAFT WHERE APPLICABLE MUST REMAIN WITHIN DIMENSIONS

CURRENT REV DESC:

EC NO: CO-000000853
DRWN: Yan Allen 15-Apr-2022
CHK'D: Fiona Chen 15-Apr-2022
APPR: Colin Zhang 20-Apr-2022

INITIAL REVISION:
DRWN: Yan Allen 14-Feb-2022
APPR: David Xie 24-Feb-2022

THIRD ANGLE PROJECTION | DRAWING: A1-SIZE | SERIES: 31404

molex

USCAR 0.64MM 8 WAY
ADD NEW P/N: 314049184/9194

PRODUCT SALES DRAWING

DOCUMENT NUMBER	DOC TYPE	DOC PART	REVISION
SD-31404-811	PSD	001	G12

MATERIAL NUMBER	CUSTOMER	SHEET NUMBER
	GENERAL MARKET	1 OF 4

DOCUMENT STATUS	Approved	RELEASE DATE	20-Apr-2022 01:31:59

FORMAT: Asset-Standard1
SIZE: A1
DATE: 2018/07/19

SHEET DESCRIPTION
BOM

ITEM NO.	DESCRIPTION	MATERIAL	COLOR
I	CPA	PBT-GF30	RED
II	CONNECTOR HOUSING	PBT-GF15	SEE SHEET
III	MATTE SEAL	INHERENTLY LUBRICATED SILICONE	DARK BLUE
IV	TERMINAL HOUSING	PBT-GF15	BLACK
V	PERIPHERAL SEAL	INHERENTLY LUBRICATED SILICONE	LIGHT BLUE
VI	TPA	PBT-GF30	NATURAL

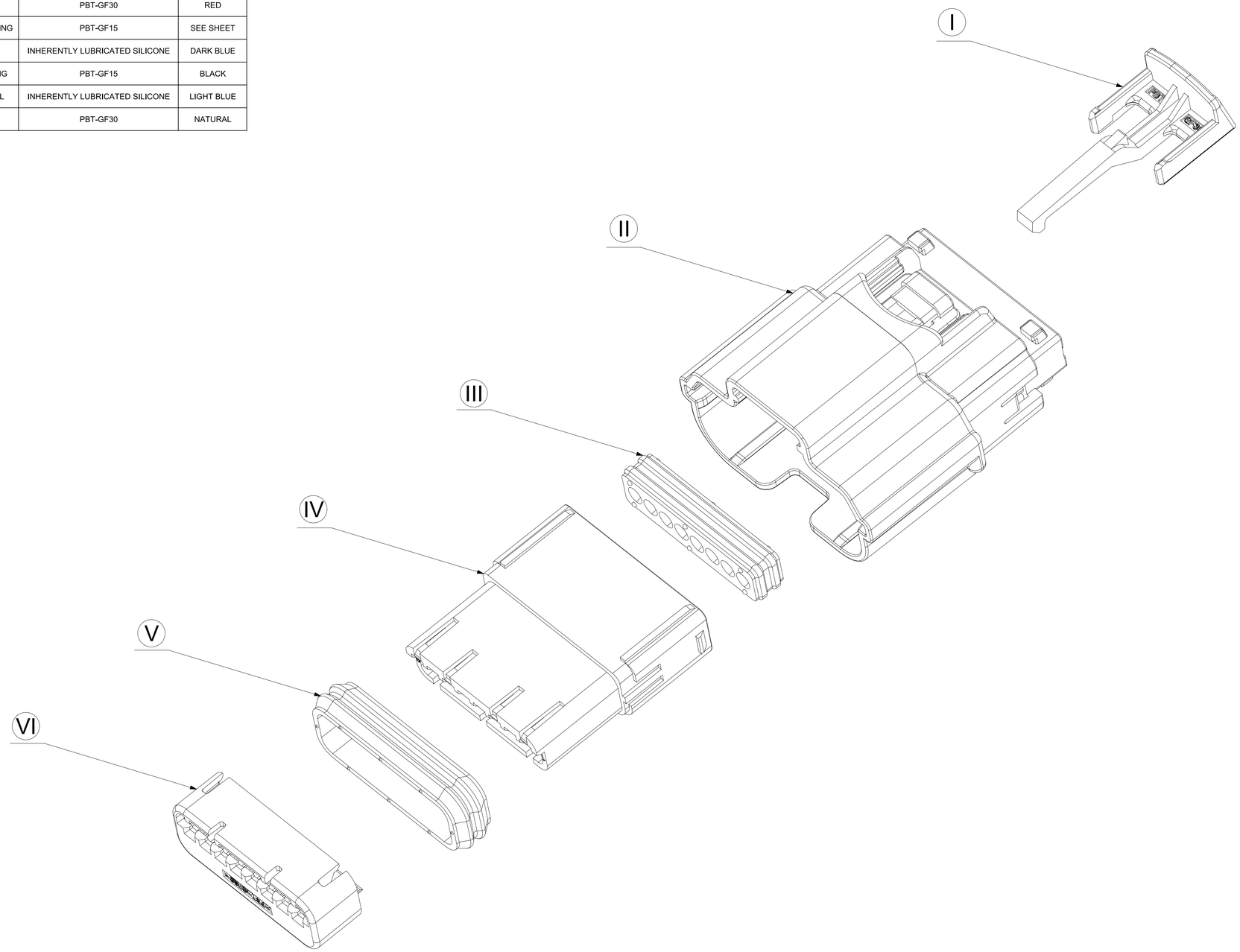

SYMBOLS	
FA	= 0
FC	= 0
FD	= 0
S	= 0
▼	= 0
C	= 0
☒	= 0
■	= 0
C	= 0

THIS DRAWING CONTAINS INFORMATION THAT IS PROPRIETARY TO MOLEX ELECTRONIC TECHNOLOGIES, LLC AND SHOULD NOT BE USED WITHOUT WRITTEN PERMISSION

DIMENSION UNITS	SCALE
mm	4:1

GENERAL TOLERANCES (UNLESS SPECIFIED)

ANGULAR TOL	±	0.5 °
4 PLACES	±	0
3 PLACES	±	0
2 PLACES	±	0
1 PLACE	±	0
0 PLACES	±	0

DRAFT WHERE APPLICABLE MUST REMAIN WITHIN DIMENSIONS

CURRENT REV DESC:

EC NO: CO-000000853
DRWN: Yan Allen 15-Apr-2022
CHK'D: Fiona Chen 15-Apr-2022
APPR: Colin Zhang 20-Apr-2022

INITIAL REVISION:
DRWN: Yan Allen 14-Feb-2022
APPR: David Xie 24-Feb-2022

molex

USCAR 0.64MM 8 WAY
ADD NEW P/N: 314049184/9194

PRODUCT SALES DRAWING

DOCUMENT NUMBER	DOC TYPE	DOC PART	REVISION
SD-31404-811	PSD	001	G12

THIRD ANGLE PROJECTION	DRAWING	SERIES	MATERIAL NUMBER	CUSTOMER	SHEET NUMBER
	A1-SIZE	31404		GENERAL MARKET	2 OF 4

DOCUMENT STATUS	Approved	RELEASE DATE	20-Apr-2022 01:31:59

SHEET DESCRIPTION
KEY CONFIGURATIONS

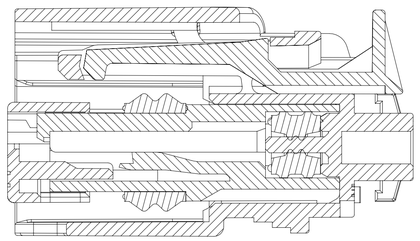

SECTION Z-Z
TPA SHOWN IN AS-SHIPPED
PRE-SET POSITION
SEE NOTE 1-a

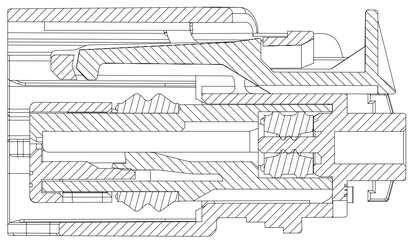

SECTION Y-Y
TPA SHOWN IN FINAL
LOCK POSITION POSTION
SEE NOTE 1-a

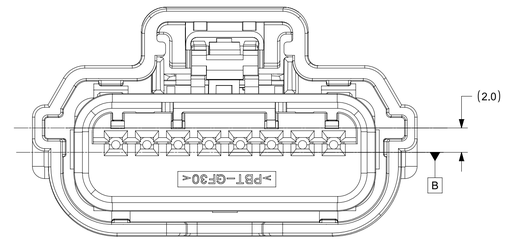

POLARIZATION A

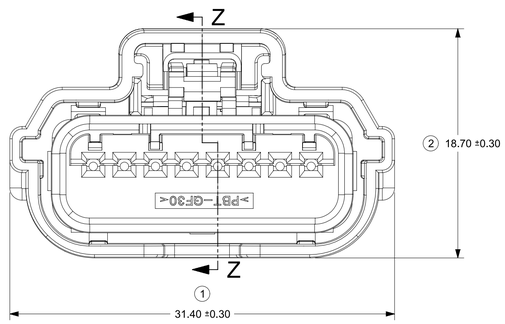

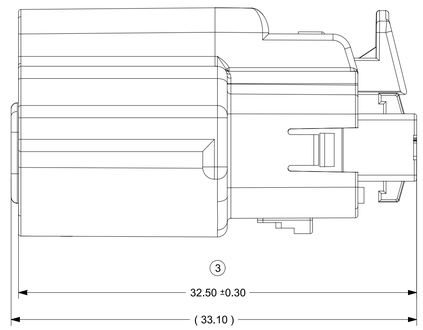

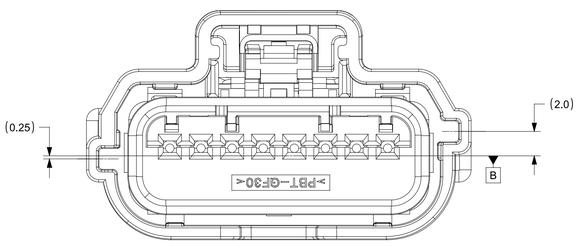

POLARIZATION B

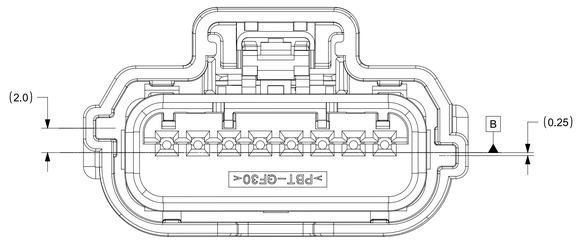

POLARIZATION C

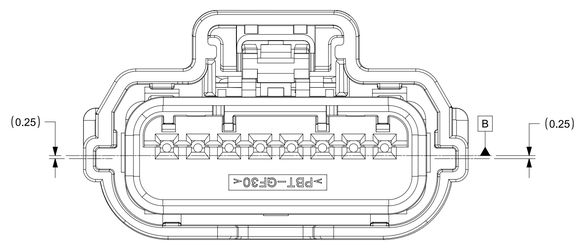

POLARIZATION D

SYMBOLS	
A = 0	
C = 0	
F = 0	
S = 0	
= 0	
= 0	
= 0	
= 0	
= 0	

DIMENSION UNITS	SCALE
mm	4:1

GENERAL TOLERANCES (UNLESS SPECIFIED)		
ANGULAR TOL	±	0.5 °
4 PLACES	±	0
3 PLACES	±	0
2 PLACES	±	0
1 PLACE	±	0
0 PLACES	±	0

DRAFT WHERE APPLICABLE MUST REMAIN WITHIN DIMENSIONS

THIS DRAWING CONTAINS INFORMATION THAT IS PROPRIETARY TO MOLEX ELECTRONIC TECHNOLOGIES, LLC AND SHOULD NOT BE USED WITHOUT WRITTEN PERMISSION

CURRENT REV DESC:

EC NO: CO-000000853
DRWN: Yan Allen 15-Apr-2022
CHK'D: Fiona Chen 15-Apr-2022
APPR: Colin Zhang 20-Apr-2022

INITIAL REVISION:
DRWN: Yan Allen 14-Feb-2022
APPR: David Xie 24-Feb-2022

THIRD ANGLE PROJECTION | DRAWING: A1-SIZE | SERIES: 31404

molex

USCAR 0.64MM 8 WAY
ADD NEW P/N: 314049184/9194

PRODUCT SALES DRAWING

DOCUMENT NUMBER	DOC TYPE	DOC PART	REVISION
SD-31404-811	PSD	001	G12

MATERIAL NUMBER	CUSTOMER	SHEET NUMBER
	GENERAL MARKET	3 OF 4

DOCUMENT STATUS	Approved	RELEASE DATE	20-Apr-2022 01:31:59

SHEET DESCRIPTION
WIRE DRESS COVER ASSEMBLY

WIRE DRESS COVER_HORIZONTAL

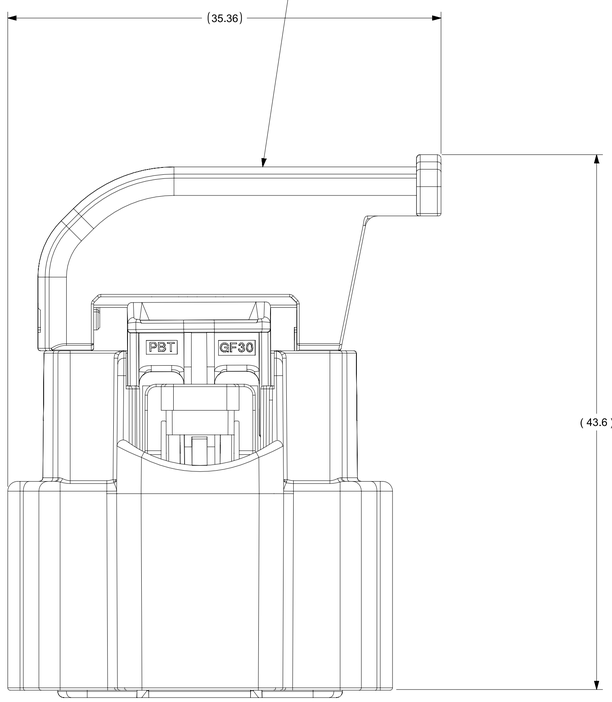

WIRE DRESS COVER_VERTICAL

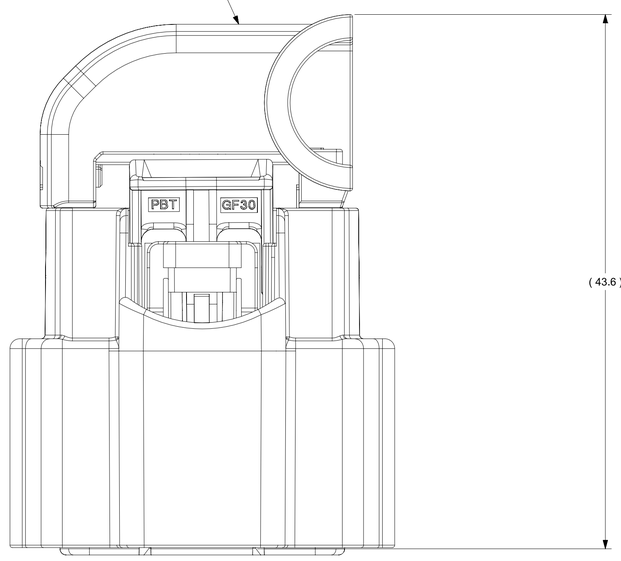

SYMBOLS
= 0
= 0
= 0
= 0
= 0
= 0
= 0
= 0
= 0

THIS DRAWING CONTAINS INFORMATION THAT IS PROPRIETARY TO MOLEX ELECTRONIC TECHNOLOGIES, LLC AND SHOULD NOT BE USED WITHOUT WRITTEN PERMISSION

DIMENSION UNITS	SCALE
mm	4:1

GENERAL TOLERANCES (UNLESS SPECIFIED)		
ANGULAR TOL	±	0.5 °
4 PLACES	±	0
3 PLACES	±	0
2 PLACES	±	0
1 PLACE	±	0
0 PLACES	±	0

DRAFT WHERE APPLICABLE MUST REMAIN WITHIN DIMENSIONS

CURRENT REV DESC:

EC NO: CO-000000853
DRWN: Yan Allen 15-Apr-2022
CHK'D: Fiona Chen 15-Apr-2022
APPR: Colin Zhang 20-Apr-2022

INITIAL REVISION:
DRWN: Yan Allen 14-Feb-2022
APPR: David Xie 24-Feb-2022

THIRD ANGLE PROJECTION | DRAWING: A1-SIZE | SERIES: 31404

molex

USCAR 0.64MM 8 WAY
ADD NEW P/N: 314049184/9194

PRODUCT SALES DRAWING

DOCUMENT NUMBER	DOC TYPE	DOC PART	REVISION
SD-31404-811	PSD	001	G12

MATERIAL NUMBER	CUSTOMER	SHEET NUMBER
	GENERAL MARKET	4 OF 4

DOCUMENT STATUS	Approved	RELEASE DATE	20-Apr-2022 01:31:59