CONFIDENTIAL

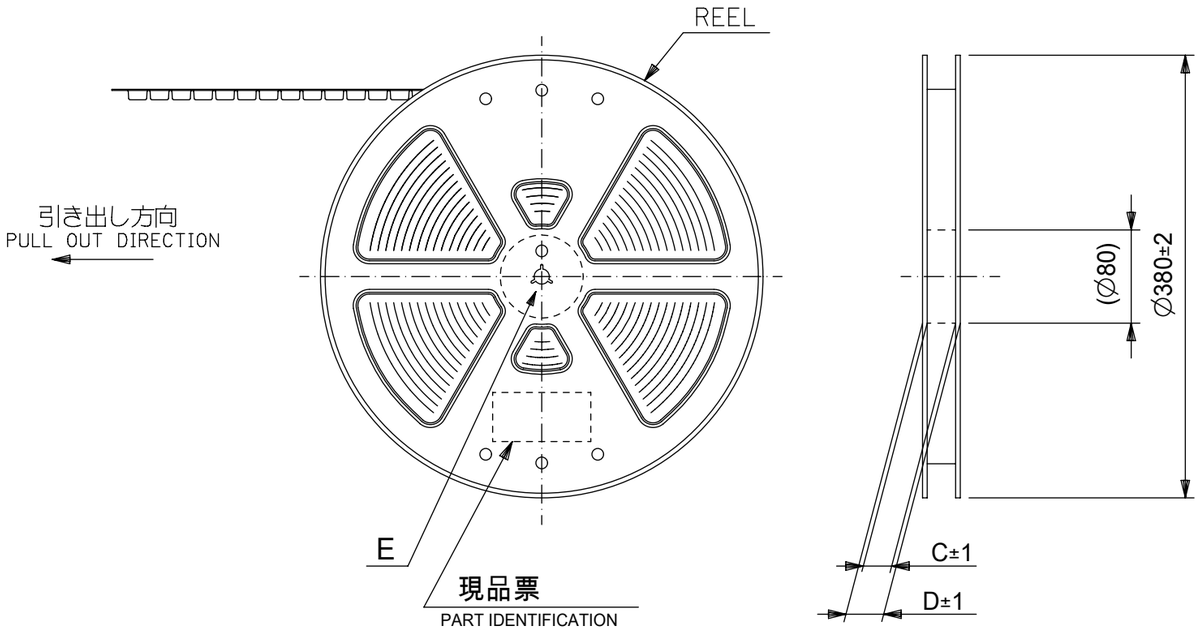

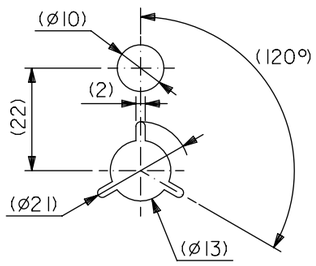

DETAIL E

NOTES

1. 製品詳細寸法については図面 512811000-SD を参照下さい。
   RE DETAILED DIMENSION, SEE 512811000-SD
2. 梱包数量：３０００個／リール
   NUMBER OF CONNECTORS ：3000PCS/REEL
3. リードテープ長さ LEAD TAPE LENGTH

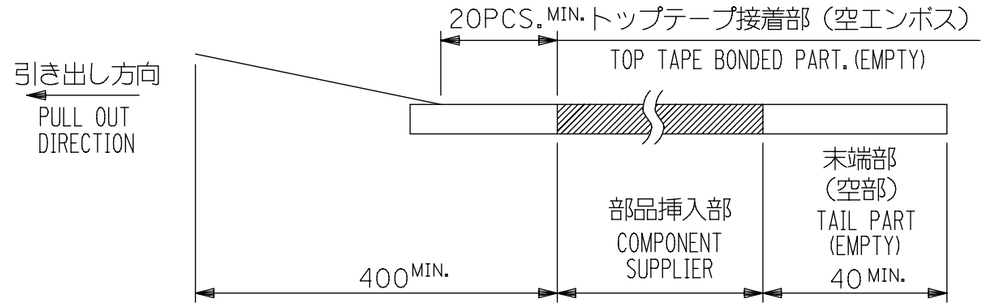

4. トップテープの剥離強度：0.1N～1.3N {10gf～130gf}
   （剥離方向は下図参照）
   尚、本規格値は出荷時に適用。（但し、輸送時に剥離が発生しないこと。）
   PEELING OFF FORCE OF TOP TAPE ：0.1N～1.3N {10gf～130gf}
   (PEELING DIRECTION AS SHOWN IN FOLLOWING FIG.)
   THIS REQUIREMENT SHOULD BE APPLIED AT SHIPMENT.
   PEEL OFF SHOULD NOT BE ALLOWED , DURING TRANSPORTATION.

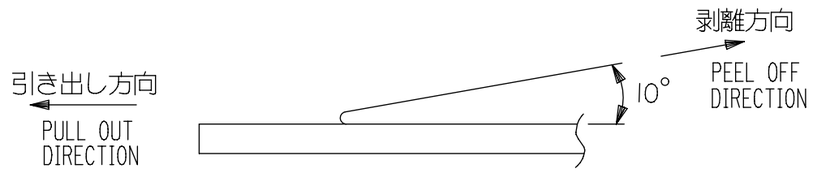

5. 材料 (MATERIAL)
   キャリアテープ(CARRIER TAPE)：ポリプロピレン(POLYPROPYLENE)
   トップテープ(TOPTAPE)：PET , PE , PEF
   リール(REEL)：ポリスチレン(PS)〈リサイクル材含む〉
   POLYSTYREN (PS)<RECYCLE MATERIAL CONTAINED>
6. C,D 寸法は SHEET 2 ～ 3 を参照下さい。
   SEE SHEET 2 ～ 3 (DIMENSION C,D).

THIS DRAWING CONTAINS INFORMATION THAT IS PROPRIETARY TO MOLEX ELECTRONIC TECHNOLOGIES, LLC AND SHOULD NOT BE USED WITHOUT WRITTEN PERMISSION

DIMENSION UNITS	SCALE
mm	NTS

GENERAL TOLERANCES (UNLESS SPECIFIED)		
ANGULAR TOL	±	3.0 °
4 PLACES	±	0.2
3 PLACES	±	0.2
2 PLACES	±	0.2
1 PLACE	±	0.2
0 PLACES	±	0.2

DRAFT WHERE APPLICABLE MUST REMAIN WITHIN DIMENSIONS

CURRENT REV DESC:

EC NO: 708402
DRWN: NARENC 2022/05/27
CHK'D: SMARUYAMA 2022/05/30
APPR: YNAITO 2022/05/30

INITIAL REVISION:
DRWN: NARENC 2022/05/16
APPR: YNAITO 2022/05/30

molex

0.5 FPC CONN NON-ZIF (HGT=1.2MM) EMBSTP PKG

PRODUCT CUSTOMER DRAWING

DOCUMENT NUMBER	DOC TYPE	DOC PART	REVISION
512810000-SD	PSD	000	A

THIRD ANGLE PROJECTION	DRAWING	SERIES	MATERIAL NUMBER	CUSTOMER	SHEET NUMBER
	A3-SIZE	51281	SEE SHEET 2 TO 4	GENERAL MARKET	1 OF 4

DOCUMENT STATUS	P1	RELEASE DATE	2022/05/30 07:47:18

FORMAT: master-tb-prod-A3
REVISION: J1
DATE: 2021/05/01

CONFIDENTIAL

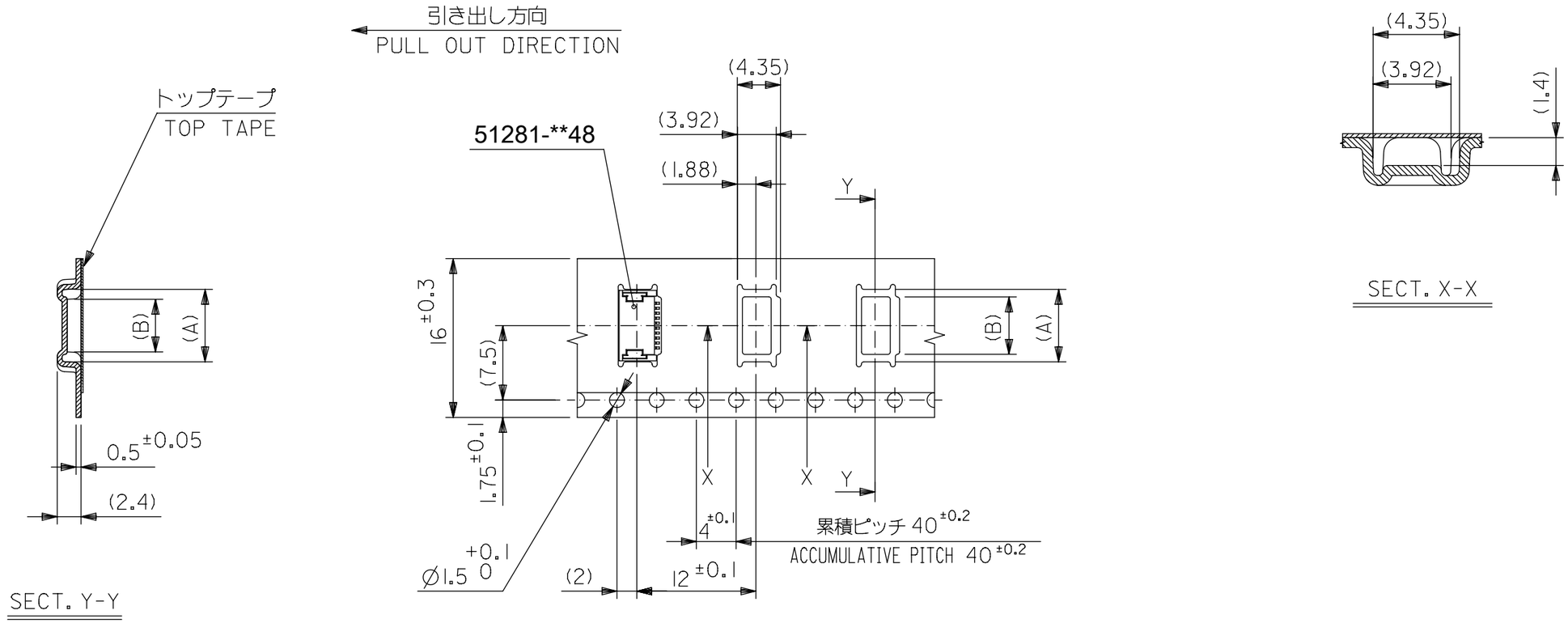

１６mm幅キャリアテープ
16mm WIDTH CARRIER TAPE

キャリアテープ幅 CARRIER TAPE WIDTH	D	C	(B)	(A)	製品番号 MATERIAL No.	極数 CIRCUIT
16	21.4	17.4	4.3	6.3	51281-0898	8
			3.8	5.8	51281-0798	7
			3.3	5.3	51281-0698	6
			2.8	4.8	51281-0598	5

THIS DRAWING CONTAINS INFORMATION THAT IS PROPRIETARY TO MOLEX ELECTRONIC TECHNOLOGIES, LLC AND SHOULD NOT BE USED WITHOUT WRITTEN PERMISSION

DIMENSION UNITS	SCALE
mm	NTS

GENERAL TOLERANCES (UNLESS SPECIFIED)

ANGULAR TOL	±	3.0 °
4 PLACES	±	0.2
3 PLACES	±	0.2
2 PLACES	±	0.2
1 PLACE	±	0.2
0 PLACES	±	0.2

DRAFT WHERE APPLICABLE MUST REMAIN WITHIN DIMENSIONS

CURRENT REV DESC:

EC NO: 708402
DRWN: NARENC 2022/05/27
CHK'D: SMARUYAMA 2022/05/30
APPR: YNAITO 2022/05/30

INITIAL REVISION:
DRWN: NARENC 2022/05/16
APPR: YNAITO 2022/05/30

molex

0.5 FPC CONN NON-ZIF (HGT=1.2MM) EMBSTP PKG

PRODUCT CUSTOMER DRAWING

DOCUMENT NUMBER	DOC TYPE	DOC PART	REVISION
512810000-SD	PSD	000	A

THIRD ANGLE PROJECTION	DRAWING	SERIES	MATERIAL NUMBER	CUSTOMER	SHEET NUMBER
	A3-SIZE	51281	SEE TABLE	GENERAL MARKET	2 OF 4

DOCUMENT STATUS	P1	RELEASE DATE	2022/05/30 07:47:18

FORMAT: master-tb-prod-A3
REVISION: J1
DATE: 2021/05/01

CONFIDENTIAL

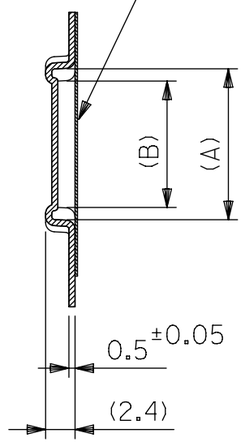

SECT. Y-Y

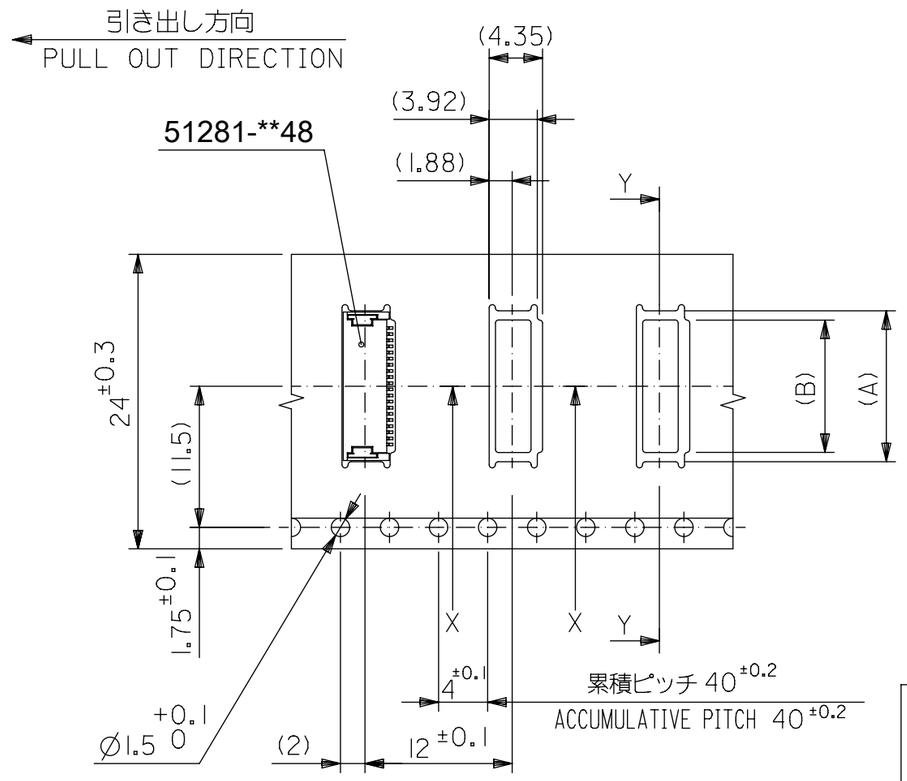

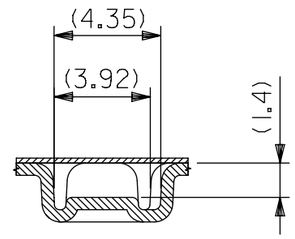

SECT. X-X

24mm幅キャリアテープ

24mm WIDTH CARRIER TAPE

キャリアテープ幅 CARRIER TAPE WIDTH	D	C	(B)	(A)	製品番号 MATERIAL No.	極数 CIRCUIT
24	29.4	25.4	12.3	14.3	51281-2498	24
			11.3	13.3	51281-2298	22
			10.3	12.3	51281-2098	20
			9.3	11.3	51281-1898	18
			8.3	10.3	51281-1698	16
			7.3	9.3	51281-1498	14
			6.3	8.3	51281-1298	12
			5.8	7.8	51281-1198	11
			5.3	7.3	51281-1098	10
			4.8	6.8	51281-0998	9

THIS DRAWING CONTAINS INFORMATION THAT IS PROPRIETARY TO MOLEX ELECTRONIC TECHNOLOGIES, LLC AND SHOULD NOT BE USED WITHOUT WRITTEN PERMISSION

DIMENSION UNITS	SCALE
mm	NTS

GENERAL TOLERANCES (UNLESS SPECIFIED)

ANGULAR TOL	±	3.0 °
4 PLACES	±	0.2
3 PLACES	±	0.2
2 PLACES	±	0.2
1 PLACE	±	0.2
0 PLACES	±	0.2

DRAFT WHERE APPLICABLE MUST REMAIN WITHIN DIMENSIONS

CURRENT REV DESC:

EC NO: 708402
DRWN: NARENC 2022/05/27
CHK'D: SMARUYAMA 2022/05/30
APPR: YNAITO 2022/05/30

INITIAL REVISION:
DRWN: NARENC 2022/05/16
APPR: YNAITO 2022/05/30

THIRD ANGLE PROJECTION | DRAWING: A3-SIZE | SERIES: 51281

molex

0.5 FPC CONN NON-ZIF (HGT=1.2MM) EMBSTP PKG

PRODUCT CUSTOMER DRAWING

DOCUMENT NUMBER	DOC TYPE	DOC PART	REVISION
512810000-SD	PSD	000	A

MATERIAL NUMBER	CUSTOMER	SHEET NUMBER
SEE TABLE	GENERAL MARKET	3 OF 4

DOCUMENT STATUS	P1	RELEASE DATE	2022/05/30 07:47:18

FORMAT: master-tb-prod-A3
REVISION: J1
DATE: 2021/05/01

CONFIDENTIAL

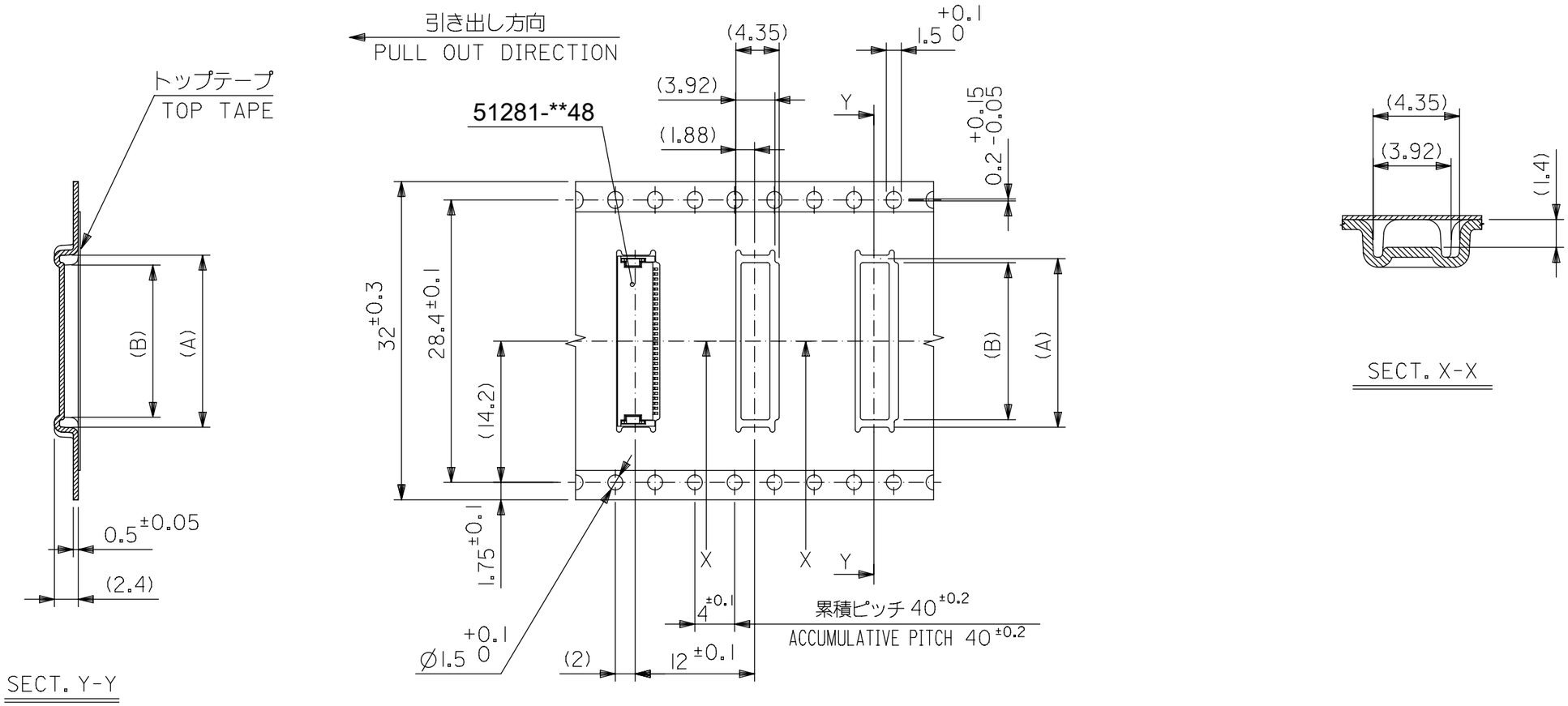

32mm幅キャリアテープ

32mm WIDTH CARRIER TAPE

32	37.4	33.4	13.3	15.3	51281-2698	26
キャリアテープ幅 CARRIER TAPE WIDTH	D	C	(B)	(A)	製品番号 MATERIAL No.	極数 CIRCUIT

THIS DRAWING CONTAINS INFORMATION THAT IS PROPRIETARY TO MOLEX ELECTRONIC TECHNOLOGIES, LLC AND SHOULD NOT BE USED WITHOUT WRITTEN PERMISSION

DIMENSION UNITS	SCALE
mm	NTS

GENERAL TOLERANCES (UNLESS SPECIFIED)

ANGULAR TOL	±	3.0 °
4 PLACES	±	0.2
3 PLACES	±	0.2
2 PLACES	±	0.2
1 PLACE	±	0.2
0 PLACES	±	0.2

DRAFT WHERE APPLICABLE MUST REMAIN WITHIN DIMENSIONS

CURRENT REV DESC:

EC NO: 708402
DRWN: NARENC 2022/05/27
CHK'D: SMARUYAMA 2022/05/30
APPR: YNAITO 2022/05/30

INITIAL REVISION:
DRWN: NARENC 2022/05/16
APPR: YNAITO 2022/05/30

THIRD ANGLE PROJECTION | DRAWING: A3-SIZE | SERIES: 51281

molex

0.5 FPC CONN NON-ZIF
(HGT=1.2MM) EMBSTP PKG

PRODUCT CUSTOMER DRAWING

DOCUMENT NUMBER	DOC TYPE	DOC PART	REVISION
512810000-SD	PSD	000	A

MATERIAL NUMBER	CUSTOMER	SHEET NUMBER
SEE TABLE	GENERAL MARKET	4 OF 4

DOCUMENT STATUS	P1	RELEASE DATE	2022/05/30 07:47:18

FORMAT: master-tb-prod-A3
REVISION: J1
DATE: 2021/05/01

CONFIDENTIAL

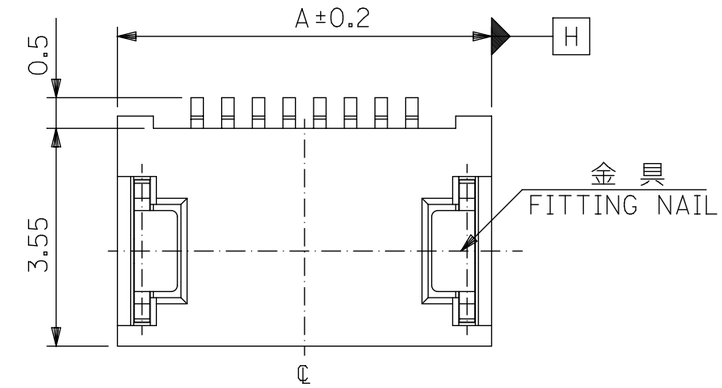

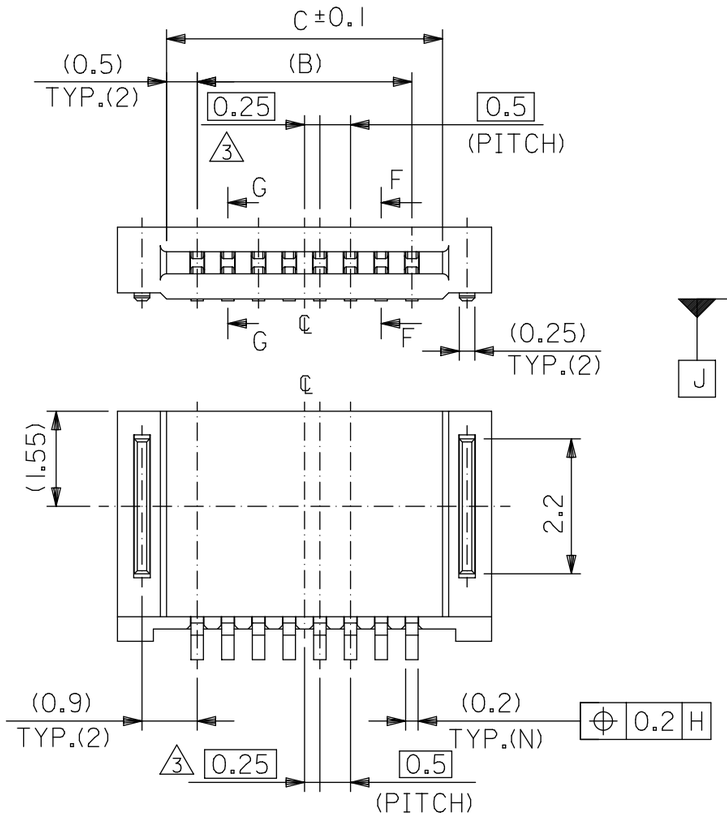

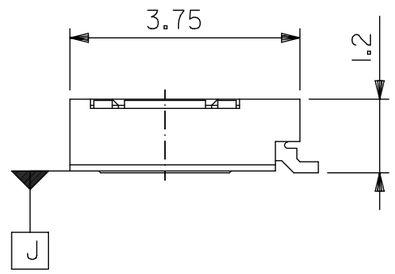

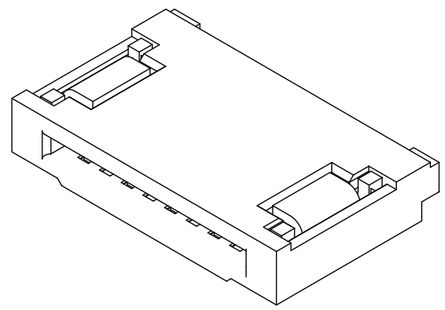

ISO VIEW (参考)

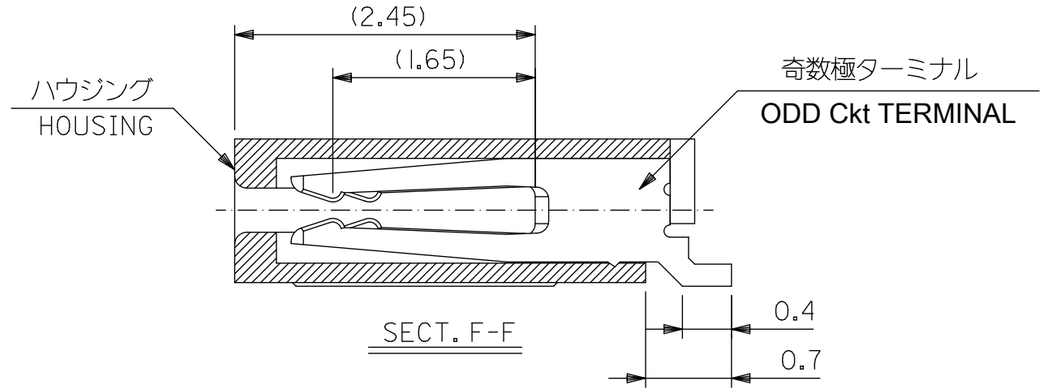

SECT. F-F

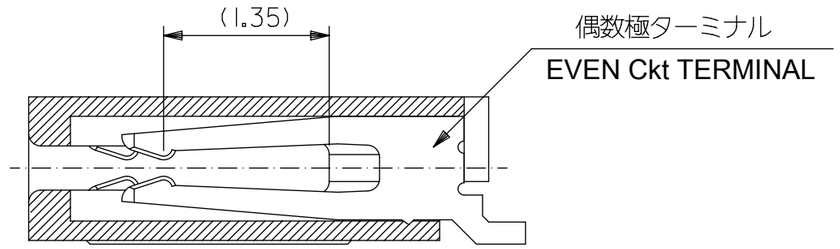

SECT. G-G

13.5	12.5	15.1	51281-2698	26
12.5	11.5	14.1	51281-2498	24
11.5	10.5	13.1	51281-2298	22
10.5	9.5	12.1	51281-2098	20
9.5	8.5	11.1	51281-1898	18
8.5	7.5	10.1	51281-1698	16
7.5	6.5	9.1	51281-1498	14
6.5	5.5	8.1	51281-1298	12
6.0	5.0	7.6	51281-1198	11
5.5	4.5	7.1	51281-1098	10
5.0	4.0	6.6	51281-0998	9
4.5	3.5	6.1	51281-0898	8
4.0	3.0	5.6	51281-0798	7
3.5	2.5	5.1	51281-0698	6
3.0	2.0	4.6	51281-0598	5
C	B	A	EMBOSSED TAPE ORDER No. オーダー番号	CIRCUIT

CONNECTOR SERIES NO. : 51281-**48

THIS DRAWING CONTAINS INFORMATION THAT IS PROPRIETARY TO MOLEX ELECTRONIC TECHNOLOGIES, LLC AND SHOULD NOT BE USED WITHOUT WRITTEN PERMISSION

DIMENSION UNITS	SCALE
mm	NTS

GENERAL TOLERANCES (UNLESS SPECIFIED)

ANGULAR TOL	±	3.0 °
4 PLACES	±	0.2
3 PLACES	±	0.2
2 PLACES	±	0.2
1 PLACE	±	0.2
0 PLACES	±	0.2

DRAFT WHERE APPLICABLE MUST REMAIN WITHIN DIMENSIONS

CURRENT REV DESC:

EC NO: 708402
DRWN: NARENC 2022/05/27
CHK'D: SMARUYAMA 2022/05/30
APPR: YNAITO 2022/05/30

INITIAL REVISION:
DRWN: NARENC 2022/05/17
APPR: YNAITO 2022/05/30

molex

0.5 FPC CONN NON-ZIF
HSG ASSY (HGT=1.2MM)

PRODUCT CUSTOMER DRAWING

DOCUMENT NUMBER	DOC TYPE	DOC PART	REVISION
512811000-SD	PSD	000	A

THIRD ANGLE PROJECTION	DRAWING	SERIES	MATERIAL NUMBER	CUSTOMER	SHEET NUMBER
	A3-SIZE	51281	SEE TABLE	GENERAL MARKET	1 OF 2

DOCUMENT STATUS	P1	RELEASE DATE	2022/05/30 07:47:19

FORMAT: master-Sized-A3
REVISION: J1
DATE: 2021/05/05

CONFIDENTIAL

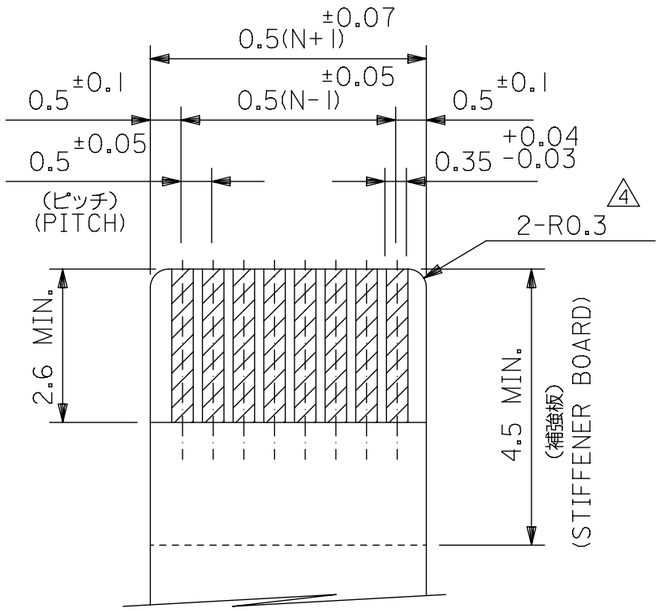

適合ＦＰＣ推奨寸法
APPLICABLE FPC
RECOMMENDED DIMENSION
(仕上がり厚さ：0.3 ±0.03)
(THICKNESS:0.3 ±0.03)

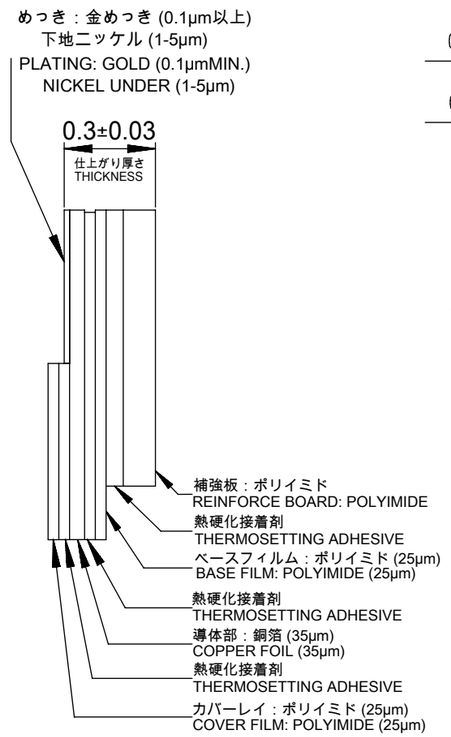

FPC構成推奨仕様
STRUCTURE OF FPC

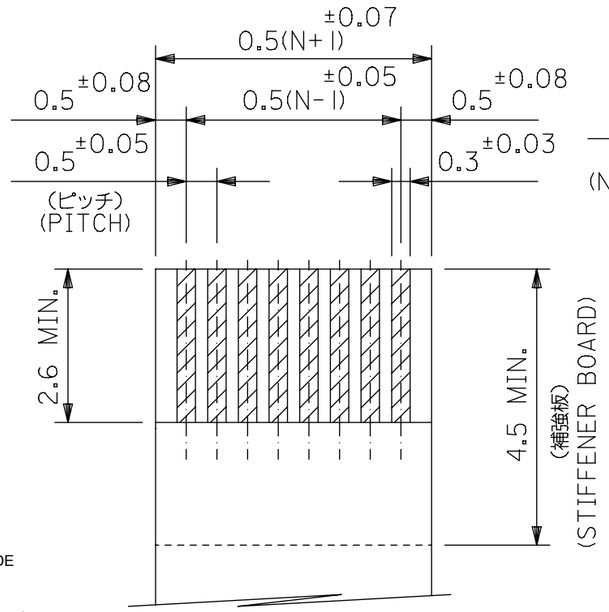

適合ＦＦＣ推奨寸法
APPLICABLE FFC
RECOMMENDED DIMENSION
(仕上がり厚さ：0.3 ±0.03)
(THICKNESS:0.3 ±0.03)

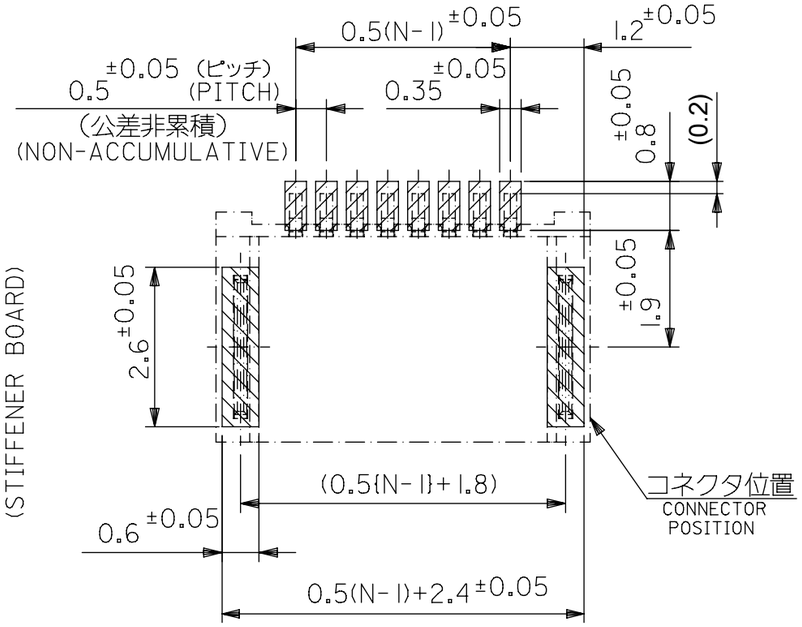

参考基板レイアウト図
RECOMMENDED P.C.BOARD LAYOUT
(マウント面)
(MOUNTING SIDE)

注記 NOTES

1. 使用材料 MATERIAL
   ハウジング：液体ポリマー ガラス充填 UL94V-0
   HOUSING : LIQUID CRYSTAL POLYMER (GRASS FILLED) UL94-0
   ターミナル：リン青銅 (t=0.2), ニッケル下地, コンタクト部：金メッキ, テール部：錫メッキ
   TERMINAL : PHOSPHOR-BRONZE, CONTACT : GOLD, TAIL : TIN, OVER NICKEL PLATING
   金具：リン青銅 (t=0.25), ニッケル下地 純錫メッキ
   2 FITTING NAIL : PHOSPHOR-BRONZE, PURE-TIN OVER NICKEL PLATING
   ソルダーてーり半田付け面のズレ量、及び金具半田付け面のズレ量は、基準面 J に対し、
   上方向 0.1 MAXIMUM 下方向 0.15 MAXIMUMとする。
   又、相互のバラツキ量は 0.1 MAXIMUMとする。
   MISALIGNMNET OF SOLDER TAILS AND FITTING NAILS FROM J
   UPPER DIRECTION ; 0.1 MAXIMUM, LOWER DIRECTION ; 0.15 MAXIMUM.
   OFFSET BETWEEN SOLDER TAILS AND FITTING NAILS ; 0.1 MAXIMUM.
   3 偶数極に適用
   TO BE APPLIED PNLY WHEN ALL CIRCUIT ARE EVEN.
   4 R0.3は、FPCの導体部にかからないこと。
   R0.3 MUST NOT BE OVERLAPPED TO PATTERN OF FPC.
5. FPC/FFCについて：
   打抜き方向は導体側から補強版側を推奨いたします。
   導体部については軟銅箔35μmまたは50μm
   メッキ厚0.1 μm以上金メッキ(電気メッキ)を推奨いたします。
   RECOMMENDED PUCHER DIRECTION :
   FROM CONDUCTOR SIDE TO STIFFENER BOARD SIDE.
   RECOMMENDED CONDUCTOR SPEC :
   THICKNESS OF SOFT COPPER FOIL : 35 μm or 50 μm
   GOLD PLATING : 0.1 μm MIN. (ELECTRICAL PLATING)
6. 本製品は51281-**20の鉛フリー品である。
   THIS PRODUCT IS LEAD FREE OF 51281-**20.
7. ソルダーテールの平坦度は、0.1 MAXIMUMとする。
   SOLDER TAIL COPLANARITY IS 0.1 MAXIMUM.

THIS DRAWING CONTAINS INFORMATION THAT IS PROPRIETARY TO MOLEX ELECTRONIC TECHNOLOGIES, LLC AND SHOULD NOT BE USED WITHOUT WRITTEN PERMISSION

DIMENSION UNITS	SCALE
mm	NTS

GENERAL TOLERANCES (UNLESS SPECIFIED)

ANGULAR TOL	±	3.0°
4 PLACES	±	0.2
3 PLACES	±	0.2
2 PLACES	±	0.2
1 PLACE	±	0.2
0 PLACES	±	0.2

DRAFT WHERE APPLICABLE MUST REMAIN WITHIN DIMENSIONS

CURRENT REV DESC:

EC NO: 708402
DRWN: NARENC 2022/05/27
CHK'D: SMARUYAMA 2022/05/30
APPR: YNAITO 2022/05/30

INITIAL REVISION:
DRWN: NARENC 2022/05/17
APPR: YNAITO 2022/05/30

molex

0.5 FPC CONN NON-ZIF
HSG ASSY (HGT=1.2MM)

PRODUCT CUSTOMER DRAWING

DOCUMENT NUMBER	DOC TYPE	DOC PART	REVISION
512811000-SD	PSD	000	A

THIRD ANGLE PROJECTION	DRAWING	SERIES	MATERIAL NUMBER	CUSTOMER	SHEET NUMBER
	A3-SIZE	51281	SEE SHEET 1	GENERAL MARKET	2 OF 2

DOCUMENT STATUS	P1	RELEASE DATE	2022/05/30 07:47:19

FORMAT: master-Board-A3
REVISION: J1
DATE: 2021/05/07