MPQ6531

5V to 60V, Three-Phase Brushless DC Motor Pre-Driver AEC-Q100 Qualified

DESCRIPTION

The MPQ6531 is a gate driver IC designed for three-phase brushless DC motor driver applications. It is capable of driving three half-bridges consisting of six N-channel power MOSFETs up to 60V.

The MPQ6531 integrates a regulated charge pump to generate gate drive power, and uses a bootstrap capacitor to generate a supply voltage for the high-side MOSFET driver. An internal trickle-charge circuit maintains a sufficient high-side gate driver voltage at 100% duty cycle.

Internal safety features include programmable short-circuit protection, over-current protection, adjustable dead-time control, under-voltage lockout, and thermal shutdown.

The MPQ6531 is available in a 4mmx5mm QFN-28 package with an exposed thermal pad.

FEATURES

- Wide 5V to 60V Input Voltage Range
- Charge Pump Gate Drive Supply
- Bootstrap High-Side Driver with Trickle-Charge Circuit Supports 100% Duty Cycle Operation
- Low-Power Sleep Mode
- Programmable Short-Circuit Protection
- Over-Current Protection
- Adjustable Dead-Time Control to Prevent Shoot-Through
- Thermal Shutdown and UVLO Protection
- Fault Indication Output
- Thermally Enhanced Surface-Mounted Package
- Available in AEC-Q100 Grade 1

APPLICATIONS

- Three-Phase Brushless DC Motors
- Permanent Magnet Synchronous Motors
- Automotive Actuators, Pumps, and Fans

All MPS parts are lead-free, halogen-free, and adhere to the RoHS directive. For MPS green status, please visit the MPS website under Quality Assurance. "MPS", the MPS logo, and "Simple, Easy Solutions" are registered trademarks of Monolithic Power Systems, Inc. or its subsidiaries.

TYPICAL APPLICATION

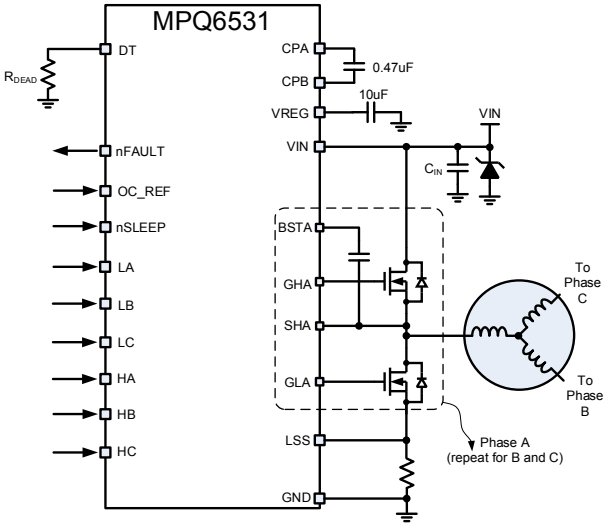

MPS Proprietary Information. Patent Protected. Unauthorized Photocopy and Duplication Prohibited.
© 2021 MPS. All Rights Reserved.

ORDERING INFORMATION

Part Number	Package	Top Marking
MPQ6531GV-AEC1*	QFN-28 (4mm x 5mm)	*See Below*
MPQ6531GVE-AEC1**	QFN-28 (4mm x 5mm)	*See Below*

* For Tape & Reel, add suffix –Z (e.g. MPQ6531GV-AEC1–Z).
** For Tape & Reel, add suffix –Z (e.g. MPQ6531GVE-AEC1–Z).

TOP MARKING (MPQ6531GV-AEC1)

MPSYWW
MP6531
LLLLLL

MP6531: Product code of MPQ6531GV-AEC1
MPS: MPS prefix
Y: Year code
WW: Week code
LLLLLL: Lot number

TOP MARKING (MPQ6531GVE-AEC1)

MPSYWW
MP6531
LLLLLL
E

MPS: MPS prefix
Y: Year code
WW: Week code
MP6531: Part number
LLLLLL: Lot number
E: Wettable flank

MPS Proprietary Information. Patent Protected. Unauthorized Photocopy and Duplication Prohibited.
© 2021 MPS. All Rights Reserved.

PACKAGE REFERENCE

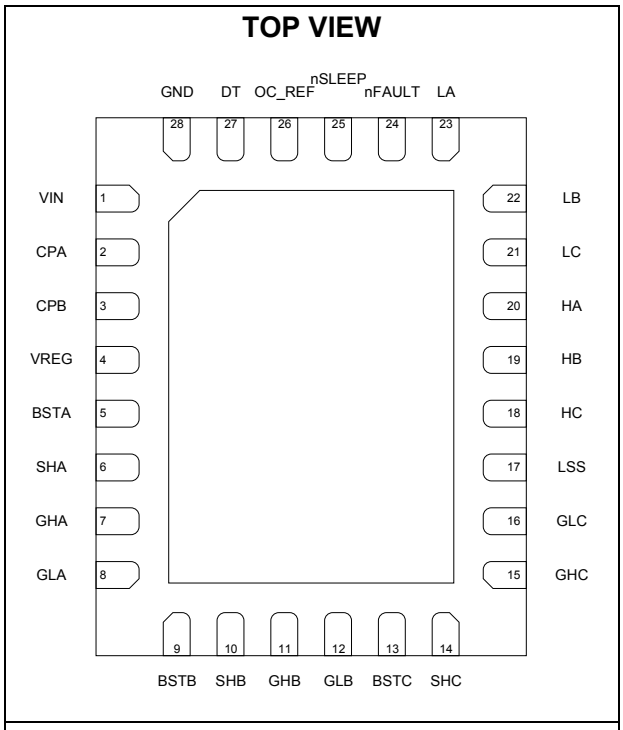

QFN-28 (4mmx5mm)

MPS Proprietary Information. Patent Protected. Unauthorized Photocopy and Duplication Prohibited.
© 2021 MPS. All Rights Reserved.

PIN FUNCTIONS

Pin #	Name	Description
1	VIN	**Input supply voltage.** Bypass VIN to ground with a ceramic capacitor. Additional bulk capacitance may be required. See Applications Information section for more detail.
2	CPA	**Charge pump capacitor.** Connect a ceramic capacitor between CPA and CPB pins. See Applications Information section for more detail.
3	CPB	**Charge pump capacitor connection terminal.**
4	VREG	**Gate drive supply output.** Connect a ceramic capacitor to ground. See Applications Information section for more detail.
5	BSTA	**Bootstrap phase A.** Connect a ceramic capacitor to SHA. See Applications Information section for more detail.
6	SHA	**High-side source connection phase A.**
7	GHA	**High-side gate drive phase A.**
8	GLA	**Low-side gate drive phase A.**
9	BSTB	**Bootstrap phase B.** Connect a ceramic capacitor to SHB. See Applications Information section for more detail.
10	SHB	**High-side source connection phase B.**
11	GHB	**High-side gate drive phase B.**
12	GLB	**Low-side gate drive phase B.**
13	BSTC	**Bootstrap phase C.** Connect a ceramic capacitor to SHC. See Applications Information section for more detail.
14	SHC	**High-side source connection phase C.**
15	GHC	**High-side gate drive phase C.**
16	GLC	**Low-side gate drive phase C.**
17	LSS	**Low-side source connection.**
18	HC	**High-side input pin for phase C.** Active high enables the high-side driver output of phase C. Internal pulldown.
19	HB	**High-side input pin for phase B.** Active high enables the high-side driver output of phase B. Internal pulldown.
20	HA	**High-side input pin for phase A.** Active high enables the high-side driver output of phase A. Internal pulldown.
21	LC	**Low-side input pin for phase C.** Active high enables the low-side driver output of phase C. Internal pulldown.
22	LB	**Low-side input pin for phase B.** Active high enables the low-side driver output of phase B. Internal pulldown.
23	LA	**Low-side input pin for phase A.** Active high enables the low-side driver output of phase A. Internal pulldown.
24	nFAULT	**Fault indication.** Open-drain output. nFAULT is logic low when in a fault condition.
25	nSLEEP	**Sleep mode input.** Drive logic low to enter low-power sleep mode. Drive logic high to enable the device. nSLEEP has an internal pull-down resistor.
26	OC_REF	**Over-current protection reference voltage input.**
27	DT	**Dead time setting.** Connect a resistor to ground to set the dead time. See Applications Information section for more detail.
28	GND	**Ground.**

MPS Proprietary Information. Patent Protected. Unauthorized Photocopy and Duplication Prohibited.
© 2021 MPS. All Rights Reserved.

ABSOLUTE MAXIMUM RATINGS (1)

Input voltage (V_{IN}) ..... -0.3V to 62V
CPA ..... -0.3V to 55V
CPB ..... -0.3V to 12.5V
VREG ..... -0.3V to 13V
BSTA/B/C ..... -0.3V to 70V
GHA/B/C (continuous) ..... -0.3V to 70V
GHA/B/C (transient, <2μS) ..... -8V to 70V
SHA/B/C (continuous)..... -0.3V to 65V
SHA/B/C (transient, <2μS)..... -8V to 65V
GLA/B/C (continuous)..... -0.3V to 13V
GLA/B/C (transient, <2μS)..... -2V to 13V
LSS (continuous) ..... -0.3V to 1V
LSS (transient, <2μS) ..... -2V to 2V
All other pins to AGND..... -0.3V to 6.5V
Continuous power dissipation (T_A = +25°C) (2)
QFN-28 (4mmx5mm)……3.1W
Storage temperature.....-55°C to +150°C
Junction temperature ..... +150°C
Lead temperature (solder) ..... +260°C

Recommended Operating Conditions (3)

Input voltage (V_{IN}) ..... +5V to 60V
OC_REF voltage (V_{OC}) ..... 0.125V to 2.4V
Operating junction temp (T_J).....-40°C to +150°C

Thermal Resistance (4) θ_{JA} θ_{JC}

QFN-28 (4mmx5mm)..... 40 ..... 9 .... °C/W

NOTES:

1) Exceeding these ratings may damage the device.
2) The maximum allowable power dissipation is a function of the maximum junction temperature T_J (MAX), the junction-to-ambient thermal resistance θ_{JA}, and the ambient temperature T_A. The maximum allowable continuous power dissipation at any ambient temperature is calculated by P_D (MAX) = (T_J (MAX) - T_A) / θ_{JA}. Exceeding the maximum allowable power dissipation will produce an excessive die temperature, causing the regulator to go into thermal shutdown. Internal thermal shutdown circuitry protects the device from permanent damage.
3) The device is not guaranteed to function outside of its operating conditions.
4) Measured on JESD51-7, 4-layer PCB.

MPS Proprietary Information. Patent Protected. Unauthorized Photocopy and Duplication Prohibited.
© 2021 MPS. All Rights Reserved.

ELECTRICAL CHARACTERISTICS

V_{IN} = 24V, T_J = -40°C to +125°C, unless otherwise noted. Typical values are at T_J = 25°C.

Parameter	Symbol	Condition	Min	Typ	Max	Units
Power Supply						
Input supply voltage	V_{IN}		5		60	V
Quiescent current	I_Q	nSLEEP = 1, gate not switching		1.8	4	mA
	I_{SLEEP}	nSLEEP = 0			1.4	μA
Control Logic						
Input logic low threshold	V_{IL}				0.8	V
Input logic high threshold	V_{IH}		2			V
Logic input current	$I_{IN(H)}$	V_{IH} = 5V	-20		20	μA
	$I_{IN(L)}$	V_{IL} = 0.8V	-20		20	μA
nSLEEP pull-down current	$I_{SLEEP-PD}$			1		μA
Internal pull-down resistance	R_{PD}	All logic inputs except nSLEEP		880		kΩ
Fault Outputs (Open-Drain Outputs)						
Output low voltage	V_{OL}	I_O = 5mA			0.5	V
Output high leakage current	I_{OH}	V_O = 3.3V			1	μA
Protection Circuit						
UVLO rising threshold	V_{IN_RISE}		3.2	3.9	5	V
UVLO hysteresis	V_{IN_HYS}			200		mV
VREG rising threshold	V_{REG_RISE}		6.8	7.6	8.4	V
VREG hysteresis	V_{REG_HYS}			0.65	1	V
VREG start-up delay	t_{REG}			880		μs
OC_REF threshold	V_{OC}	V_{OC} = 1V	0.8	1	1.2	V
		V_{OC} = 2.4V	2.18	2.4	2.62	V
OCP deglitch time	t_{OC}			3		μs
SLEEP wake-up time	t_{SLEEP}			1		ms
LSS OCP threshold	$V_{LSS-OCP}$		0.4	0.5	0.6	V
Thermal shutdown (5)	T_{TSD}			190		°C

MPS Proprietary Information. Patent Protected. Unauthorized Photocopy and Duplication Prohibited.
© 2021 MPS. All Rights Reserved.

ELECTRICAL CHARACTERISTICS *(continued)*

V_{IN} = 24V, T_J = -40°C to +125°C, unless otherwise noted. Typical values are at T_J = 25°C.

Parameter	Symbol	Condition	Min	Typ	Max	Units
Gate Drive						
Bootstrap diode forward voltage	V_{FBOOT}	I_D = 10mA			1.0	V
		I_D = 100mA			1.4	V
VREG output voltage	V_{REG}	V_{IN} = 5.5V - 60V	9.5	11.5	14	V
		V_{IN} = 5V	2xV_{IN}-1			V
Maximum source current (5)	I_{OSO}			0.8		A
Maximum sink current (5)	I_{OSI}			1		A
Gate drive pull-up resistance	R_{UP}	V_{DS} = 1V		8		Ω
HS gate drive pull-down resistance	R_{HS-DN}	V_{DS} = 1V	1		5	Ω
LS gate drive pull-down resistance	R_{LS-DN}	V_{DS} = 1V	0.7		6.7	Ω
LS passive pull-down resistance	R_{LS-PDN}			590		kΩ
LS automatic turn-on time	t_{LS}	At power-up		0.6		μs
Charge pump frequency	f_{CP}			110		kHz
Dead time	t_{DEAD}	R_{DT} = 10kΩ		700		ns
		DT tied to GND		90		ns
		R_{DT} = 100kΩ		5.7		μs

NOTE:
5) Not tested in production.

MPS Proprietary Information. Patent Protected. Unauthorized Photocopy and Duplication Prohibited.
© 2021 MPS. All Rights Reserved.

TYPICAL CHARACTERISTICS

UVLO Rising Threshold vs. Temperature

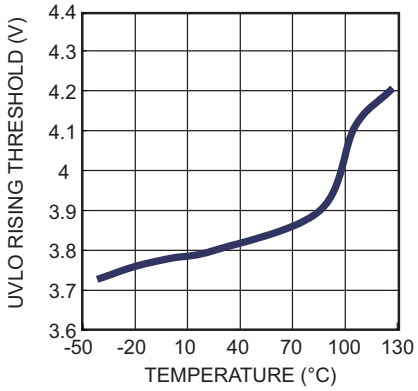

VREG Rising Threshold vs. Temperature

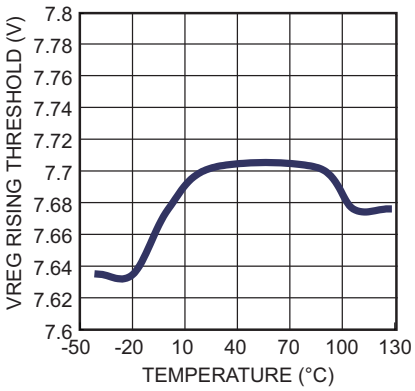

OC_REF Threshold vs. Temperature

V_{OC} = 2.4V

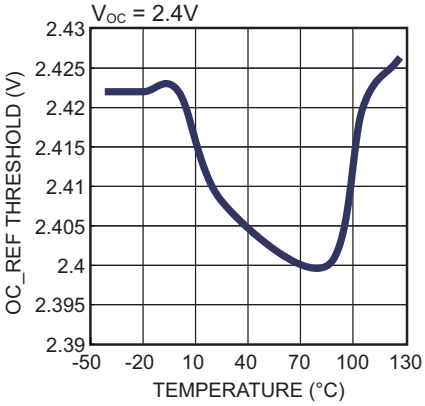

LSS OCP Threshold vs. Temperature

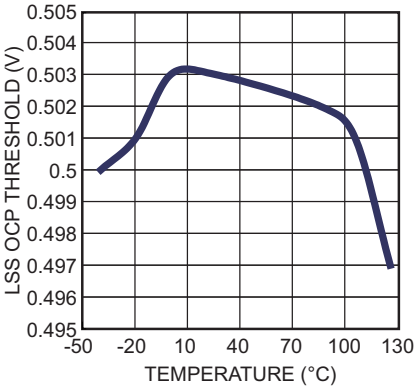

MPS Proprietary Information. Patent Protected. Unauthorized Photocopy and Duplication Prohibited.
© 2021 MPS. All Rights Reserved.

TYPICAL PERFORMANCE CHARACTERISTICS

V_{IN} = 24V, OC_REF = 0.5V, R_{DT} = 20kΩ, F_{PWMA} = 20kHz, LB = 5V, T_A = 25°C, resistor + inductor load: 5Ω + 1mH/phase with star connection, unless otherwise noted.

Steady State
Duty=10%

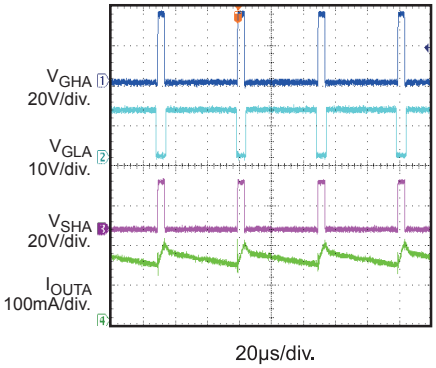

Steady State
Duty=50%

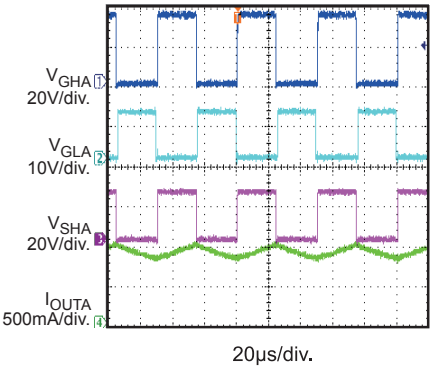

Steady State
Duty=90%

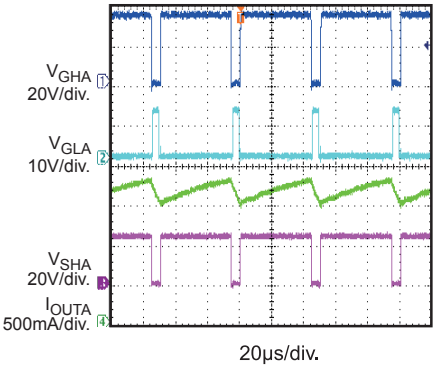

Power Ramp Up
Duty=10%

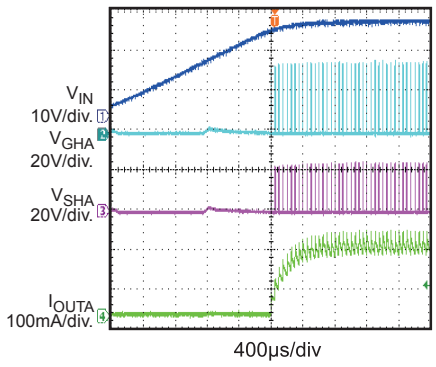

Power Ramp Up
Duty=50%

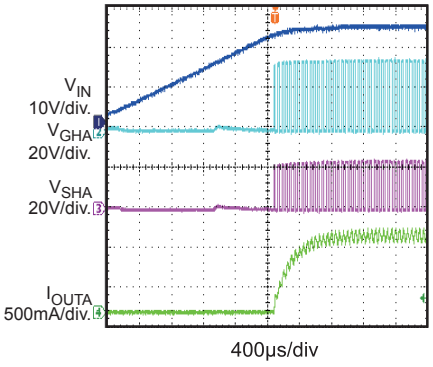

Power Ramp Up
Duty=90%

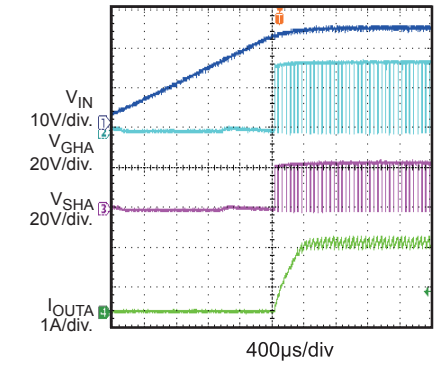

Sleep Recovery
Duty=10%

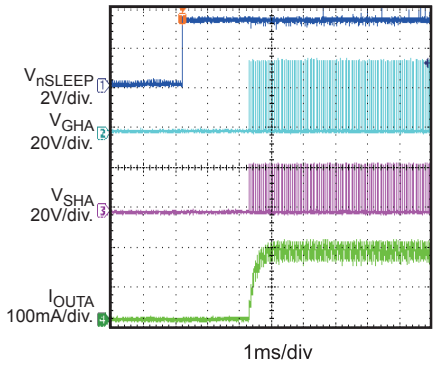

Sleep Recovery
Duty=50%

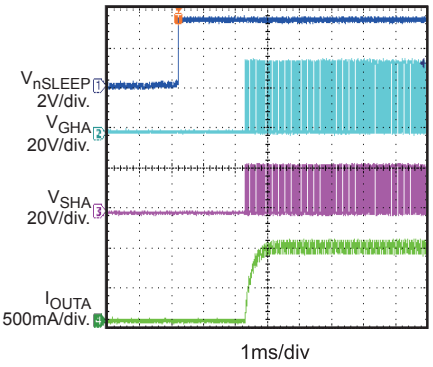

Sleep Recovery
Duty=90%

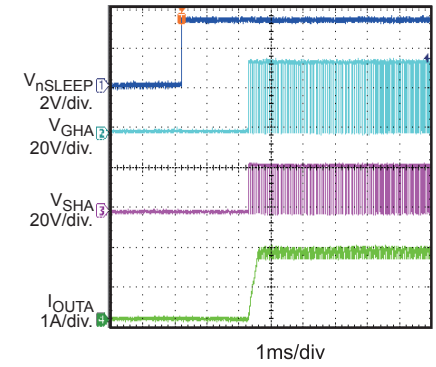

MPS Proprietary Information. Patent Protected. Unauthorized Photocopy and Duplication Prohibited.
© 2021 MPS. All Rights Reserved.

TYPICAL PERFORMANCE CHARACTERISTICS *(continued)*

V_{IN} = 24V, OC_REF = 0.5V, R_{DT} = 20kΩ, F_{PWMA} = 20kHz, LB = 5V, T_A = 25°C, resistor + inductor load: 5Ω + 1mH/phase with star connection, unless otherwise noted.

Sleep Entry
Duty=10%

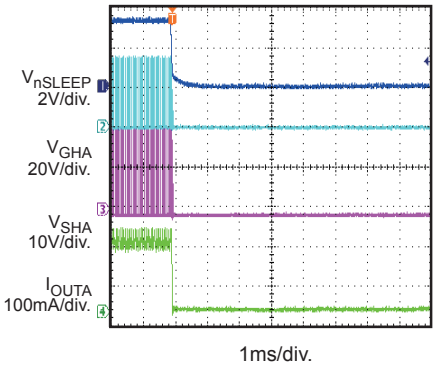

Sleep Entry
Duty=50%

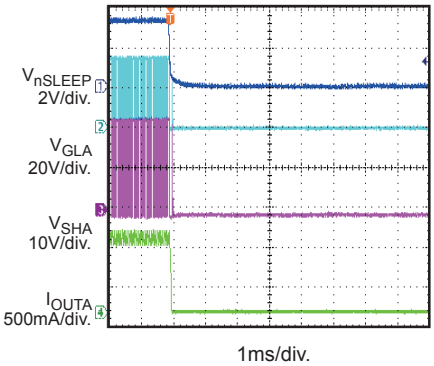

Sleep Entry
Duty=90%

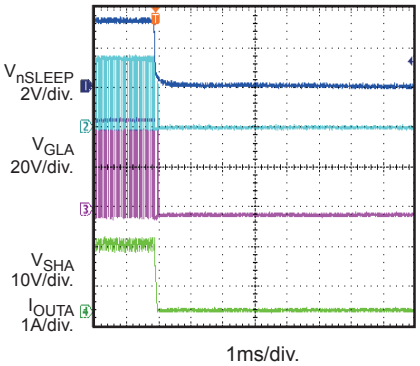

VREG Startup
F_{PWMX}=20kHz with duty=50%, No load

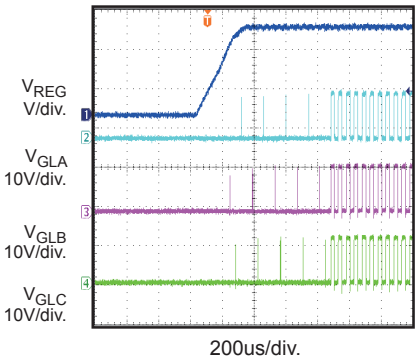

MPS Proprietary Information. Patent Protected. Unauthorized Photocopy and Duplication Prohibited.
© 2021 MPS. All Rights Reserved.

FUNCTIONAL BLOCK DIAGRAM

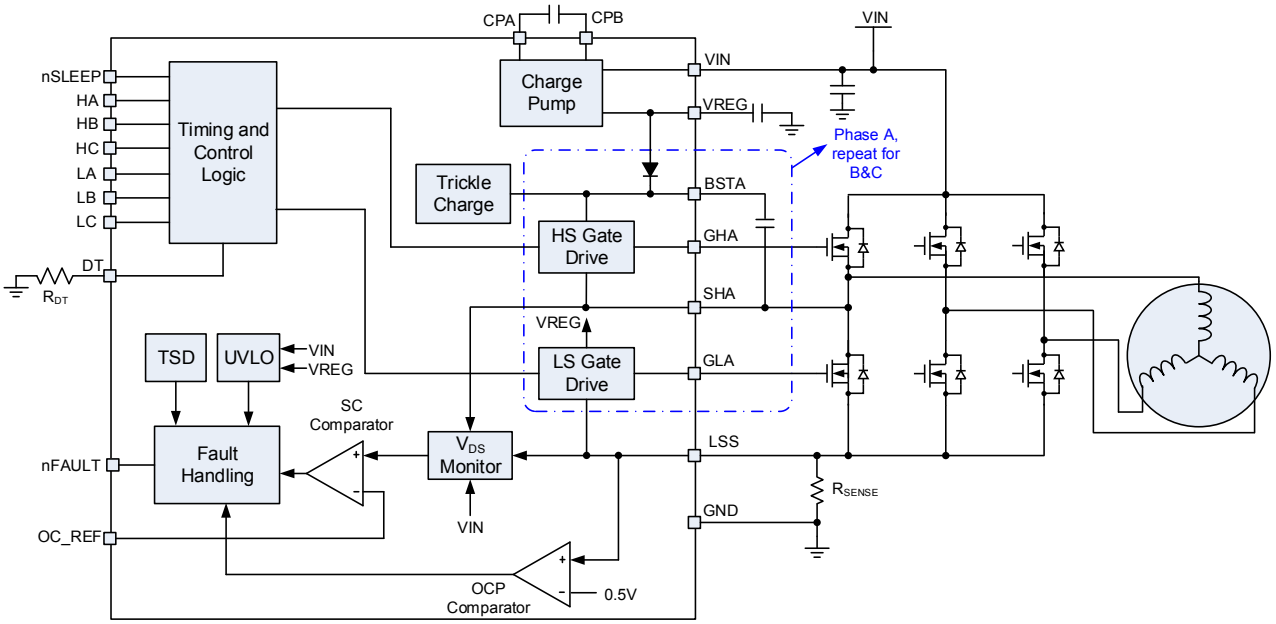

Figure 1: Functional Block Diagram

MPS Proprietary Information. Patent Protected. Unauthorized Photocopy and Duplication Prohibited.
© 2021 MPS. All Rights Reserved.

OPERATION

The MPQ6531 is a three-phase BLDC motor pre-driver that drives three external N-channel MOSFET half-bridges with 0.8A source and 1A sink current capability. It operates over a wide input voltage range of 5V to 60V, generating a boosted gate drive voltage when the input supply is below 12V. The MPQ6531 features a low-power sleep mode, which disables the device and draws a very low supply current.

The MPQ6531 provides several flexible functions, such as adjustable dead-time control and over-current protection, which allow the device to cover a wide range of applications.

Power-Up Sequence

The power-up sequence is initiated by the application of voltage to VIN. To initiate power-up, V_{IN} must be above the under-voltage lockout threshold (V_{IN_RISE}).

After power-up begins, the VREG supply starts operating. VREG must rise above VREG rising threshold (V_{REG_RISE}) before the device becomes functional.

After VREG exceeds V_{REG_RISE}, the MPQ6531 sequentially turns on each low-side MOSFET(LS-FET) in succession to charge the bootstrap capacitors for a short period of time (t_{LS}).

The power-up process takes between 1ms and 2ms, after which the MPQ6531 responds to logic inputs and drives the outputs.

Gate Drive Power Supplies

Gate drive voltages are generated from the input power (V_{IN}). A regulated charge pump doubler circuit supplies a voltage of about 11.5V to VREG. This voltage is used for the low-side gate drive supply. The charge pump requires external capacitors between CPA and CPB, and from VREG to ground.

The high-side gate drive is generated by a combination of a bootstrap capacitor and an internal trickle-charge pump. Bootstrap capacitors are charged to the VREG voltage when the low-side MOSFET is turned on. This charge is then used to drive the high-side MOSFET gate when it is turned on.

To keep the bootstrap capacitors charged and allow operation at 100% duty cycle, an internal trickle-charge pump supplies a small current (about 5μA) to overcome leakages that would discharge the bootstrap capacitors.

See the Applications Information section for details on selecting external components.

Sleep Mode (nSLEEP Input)

Driving nSLEEP low puts the device into a low-power sleep state. In this state, all internal circuits are disabled, and all inputs are ignored. nSLEEP has an interval pull-down, so the pin must be driven high for the MPQ6531 to operate. When exiting sleep mode, the MPQ6531 initiates the power-up sequence.

Input Logic

Lx controls the gate drive outputs of the low-side FET or each phase, and Hx controls the gate drive output of the high-side FET (See Table 1).

Table 1: Input Logic Truth Table

Hx	Lx	SHx
L	L	High impedance
H	L	V_{IN}
L	H	GND
H	H	High impedance

nFAULT

nFAULT reports to the system when a fault condition (such as over-current or over-temperature) is detected. nFAULT is an open-drain output, and is driven low when a fault condition occurs. If the fault condition is released, nFAULT is pulled high by an external pull-up resistor.

Short-Circuit Protection (V_{DS} Sensing)

To protect the power stage from damage caused by high currents, V_{DS} sensing circuitry is implemented in the MPQ6531. The voltage drop across each MOSFET is sensed. This voltage is proportional to the $R_{DS(ON)}$ of the MOSFET and the I_{DS} current passing through it. If this voltage exceeds the voltage supplied to the OC_REF terminal, a short circuit is recognized.

In the event of a short circuit, the MPQ6531 disables all of the gate drive outputs. nFAULT is driven active low. The device will stay latched off until it is reset by nSLEEP or VIN UVLO.

Short-circuit protection can be disabled by connection a 100kΩ resistor from VREG to OC_REF.

MPS Proprietary Information. Patent Protected. Unauthorized Photocopy and Duplication Prohibited.
© 2021 MPS. All Rights Reserved.

Over-Current Protection (OCP)

The MPQ6531 implements output over-current protection (OCP) by monitoring the current through a low-side shunt resistor connected to the low-side MOSFETs. This resistor is connected to the LSS input pin and the low-side MOSFET source terminals. If the OCP function is not desired, the LSS pin and MOSFET source terminals should all be connected to ground directly.

If the LSS voltage (the voltage across the shunt resistor) exceeds the LSS OCP threshold voltage ($V_{LSS-OCP}$), an OCP event is recognized. Once an OCP event is detected, the MPQ6531 enters a latched fault state and disables all functions. The device remains latched off until it is reset by nSLEEP or VIN UVLO.

The OCP current limit level is selected by the value of the current sense resistor at the LSS pin. See the Applications Information section for more information.

OCP protection can be disabled by connecting a 100kΩ resistor from VREG to OC_REF.

Short-Circuit and OCP Deglitch Time

There is often a current spike during switching transitions caused by body diode reverse-recovery current or the distributed capacitance of the load. This current spike requires filtering to prevent it from erroneously triggering OCP. An internal fixed deglitch time (t_{OC}) blanks the output of the VDS monitor when the outputs are switched.

Dead-Time Adjustment

To prevent shoot-through in any phase of the bridge, it is necessary to have a dead time (t_{DEAD}) between a high- or low-side turn-off and the next complementary turn-on event. The dead time for all three phases is set by a single dead-time resistor (R_{DT}) between DT and ground with Equation (1):

$$t_{DEAD}(ns) = 60*R(k\Omega) \quad (1)$$

If DT is connected to ground directly, an internal minimum dead time (90ns) will be applied.

Under-Voltage Lockout (UVLO) Protection

If at any time the voltage on VIN falls below the under-voltage lockout threshold V_{IN_RISE}, all circuitry in the MPQ6531 is disabled and the internal logic is reset. Operation resumes with the power-up sequence when V_{IN} rises above the UVLO threshold.

If for any reason the voltage on VREG drops below the V_{REG_RISE} threshold, gate drive outputs disable. nFAULT is driven active low. Operation resumes when VREG rises above the threshold.

Thermal Shutdown

If the die temperature exceeds safe limits, the MPQ6531 disables outputs. Operation resumes when the temperature has fallen to a safe level.

PCB Mounting

To comply with IPC-2221 or IPC-9592 standards, conformal coating may be required after mounting the device on the PCB.

MPS Proprietary Information. Patent Protected. Unauthorized Photocopy and Duplication Prohibited.
© 2021 MPS. All Rights Reserved.

APPLICATIONS INFORMATION

Input Voltage (VIN)

VIN supplies all power to the device. It must be properly bypassed with a capacitor to ground. The normal operating range of VIN is between 5V and 60V.

VIN should never be allowed to exceed the absolute maximum ratings, even in a short-term transient condition, or damage to the device may result. In some cases, especially where mechanical energy can turn a motor into a generator, it may be necessary to use some form of over-voltage protection, such as a TVS diode, between VIN and ground.

Component Selection

MOSFET Selection

Correctly selecting the power MOSFETs used to drive a motor is crucial to designing a successful motor drive.

The MOSFET must have a VDS breakdown voltage higher than the supply voltage. A considerable margin (10V to 15V) should be added to prevent MOSFET damage from transient voltages caused by parasitic inductances in the PCB layout and wiring. For example, for 24V power supply applications, MOSFETs should have a minimum breakdown voltage of 40V to 60V. More margin is desirable in high-current applications, since the transients caused by parasitic inductances may be larger. There are also conditions, such as regenerative braking, that can inject current back into the power supply. Care must be taken so that this does not increase the power supply voltage enough to damage components.

The MOSFETs must be able to safely pass the current needed to run the motor. The highest current condition (normally when the motor is first started or stalled) needs to be supported. This is typically called the stall current of the motor.

Similar to the current capability of the MOSFET is the $R_{DS(ON)}$, which is the resistance of the MOSFET when it is fully turned on. The MOSFET dissipates power proportional to the $R_{DS(ON)}$ and the motor current, shown in Equation (2):

$$P = I^2R \quad (2)$$

$R_{DS(ON)}$ must be selected so that for the desired motor current, the heat generated can be dissipated safely. In some cases, this may require special PCB design considerations and/or external heatsinks to be used for the MOSFETs.

Consideration should be made for the safe operating area (SOA) of the MOSFETs during fault conditions, such as a short circuit. The IC acts quickly in the event of a short, but there is still a very short amount of time (about 3µS) when large currents can flow in the MOSFETs before the protection circuits recognize the fault and disable the outputs.

External Capacitor Selection

The MPQ6531 can provide a gate drive voltage (VREG) of 10V to 12V even if the input supply voltage drops as low as 5V. This gate drive voltage is generated by a charge pump inside the part, which uses external capacitors.

The charge pump flying capacitor (C_{CP}) should have a capacitance of 470nF. The capacitor must be rated to withstand the maximum V_{IN} power supply voltage. An X7R or X5R ceramic capacitor is recommended. With a 470nF capacitor, VREG can output approximately 10mA when V_{IN} is 5V. If operation below 10V is not needed, a 220nF capacitor can be used.

Use bootstrap capacitors to provide the large peak currents needed to turn on the HS MOSFET. These capacitors are charged when the output is driven low, and then the charge in the bootstrap capacitor is used to turn on the HS MOSFET when the output is driven high. Note that an internal charge pump keeps the bootstrap capacitor charged when the output is held high for an extended period.

Bootstrap capacitors are selected depending on the MOSFET total gate charge. When the HS MOSFET is turned on, the charge stored in the bootstrap capacitor is transferred to the HS MOSFET gate. As a simplified approximation, the minimum bootstrap capacitance can be estimated with Equation (3):

$$C_{BOOT} > 8*Q_G \quad (3)$$

MPS Proprietary Information. Patent Protected. Unauthorized Photocopy and Duplication Prohibited.
© 2021 MPS. All Rights Reserved.

Where Q_G is the total gate charge of the MOSFET in nC, and C_{BOOT} is in nF.

Bootstrap capacitors should not exceed 1μF, or they may cause improper operation at start-up. For most applications, bootstrap capacitors should be between 0.1μF and 1μF, X5R or X7R ceramic, rated for 25V minimum.

VREG requires a bypass capacitor to ground, placed as close to the device as possible. At a minimum, this capacitor should be a 10μF, X7R or X5R ceramic capacitor rated for 16V.

VIN requires a bypass capacitor to ground, placed as close as possible to the device. At a minimum, a 0.1μF X5R or X7R ceramic capacitor rated for the VIN voltage is recommended.

Depending on the power supply impedance and the distance between the MOSFETs and the power supply, additional bulk capacitance is usually needed. Low ESR electrolytic capacitors between 47μF and 470μF are typically used.

Dead-Time Resistor Selection

During the transition between driving an output low and high, there is a short period when neither the HS nor LS MOSFET are turned on. This period is called dead time, and is needed to prevent any overlap in conduction between HS and LS MOSFETs, which creates a short circuit directly between the power supply and ground. This condition, referred to as shoot-through, causes large transient currents and can destroy the MOSFETs.

Since motors are naturally inductive, once current is flowing in the motor, it cannot stop immediately, even if the MOSFETs are turned off. This recirculation current continues to flow in the original direction until the magnetic field has decayed.

When the MOSFETs are turned off, this current flows through the body diode, which is inherent in the MOSFET device.

MOSFET body diodes have a much higher voltage drop than the MOSFET has during conduction, so more power is dissipated during body diode conduction than during on time. Because of this, it is desirable to minimize dead time. However, dead time must be made long enough to guarantee under all conditions that the HS and LS MOSFETs are never turned on at the same time.

Dead time can be set over a large range by selecting the value of the external resistor connected to DT. Usually, a good dead time is about 1μS, which requires a 20kΩ resistor on DT. If faster switching and/or a high PWM frequency (over ~30kHz) is used, a shorter dead time may be desirable. If switching is slowed using external gate resistors, a longer dead time may be needed.

The waveform in Figure 2 shows a ~300ns dead time between the LS gate turn-off and the HS gate turn-on.

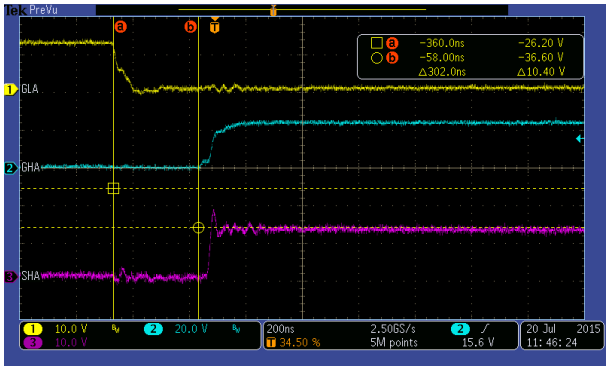

Figure 2: Dead Time

LSS Resistor Selection

If the LSS voltage exceeds 500mV, an over-current event is recognized. The external sense resistor is sized to provide a drop less than 500mV at the maximum expected motor current. For example, if a 50mΩ resistor is used, a current of 10A will cause a 500mV drop, and activate the over-current protection.

If this function is not needed, connect LSS to ground directly.

OC_REF Voltage Selection

An internal comparator compares the voltage drop across each MOSFET with a voltage provided externally on the OC_REF input pin. This voltage is normally provided by an external resistor divider from a convenient power supply. If the drop across any MOSFET exceeds the voltage on OC_REF, a short-circuit event is recognized.

If this function is not needed, connect OC_REF to VREG through a 100kΩ resistor.

MPS Proprietary Information. Patent Protected. Unauthorized Photocopy and Duplication Prohibited.
© 2021 MPS. All Rights Reserved.

Gate Drive Considerations

The gate characteristics of the selected MOSFETs will affect how fast they are switched and off. The gate drive outputs of the MPQ6531 can be connected to the gates of the power MOSFETs directly, which results in the fastest possible turn-on and turn-off times. However, it may be advantageous to add external components (resistors and/or diodes) to modify the MOSFET turn-on and turn-off characteristics.

Adding external series resistance (typically 10Ω to 100Ω) limits the current that charges and discharges the gate of the MOSFET, which slows down the turn-on and turn-off times. This is sometimes desirable to control EMI and noise. However, slowing the transition down too much results in a large power dissipation in the MOSFET during switching.

In some cases, it is desirable to have a slow turn-on, but a fast turn-off. This can be implemented by using a series resistor in parallel with a diode (see Figure 3). During turn-on, the resistor limits the current flow into the gate. During turn-off, the gate is discharged quickly through the diode.

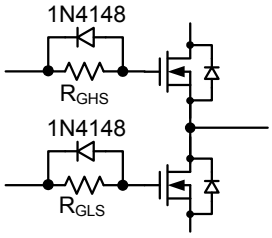

Figure 3: Gate Circuit for Fast Turn-Off

The waveform in Figure 4 shows the gates of the LS and HS MOSFETs, and the phase node (output) with no series resistance. The gates transition quickly, and the resulting rise time on the phase node is quite fast (note the scale is 100ns/div).

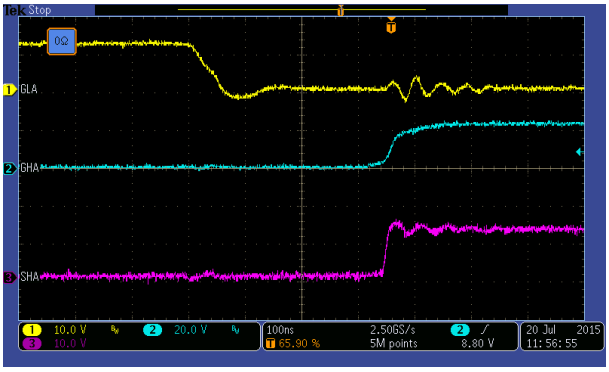

Figure 4: Switching with No Series Resistance

The waveform in Figure 5 shows the effect of adding a 100Ω series resistor between the GLA pin and the low-side MOSFET gate, the GHA pin and the high-side MOSFET gate respectively. Rise time on the phase node has been slowed significantly (note the scale is 200ns/div).

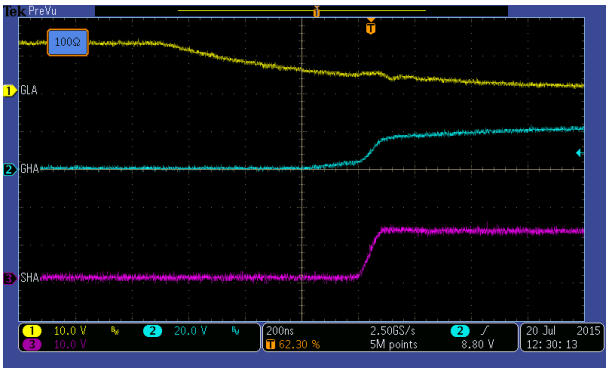

Figure 5: Switching with 100Ω Series Resistance

The waveform in Figure 6 shows the effect of adding a 1N4148 diode in parallel with the 100Ω resistors (with the cathode connected to the IC). The fall time of the LS gate is quite fast compared to the HS gate rise time. The phase node moves even slower because of a longer period of time between when the LS MOSFET is turned off and the HS MOSFET is turned on.

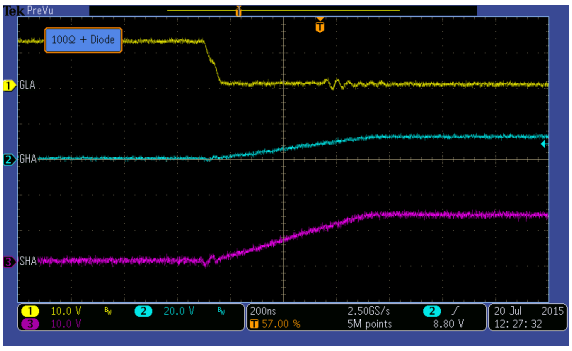

Figure 6: Switching with Resistance and Diode

MPS Proprietary Information. Patent Protected. Unauthorized Photocopy and Duplication Prohibited.
© 2021 MPS. All Rights Reserved.

PCB Layout Guidelines

Efficient PCB layout is critical to the performance of the MOSFET gate drivers. In particular, the connection between the HS source and LS drain must be as direct as possible to avoid a negative undershoot on the phase node due to parasitic inductances. The pre-driver is designed to accommodate negative undershoot, but if it is excessive, unpredictable operation or damage to the IC can result. For best results, refer to Figure 7 (which shows the MP6532 in a 4mmx4mm QFN package) and follow the guidelines below:

1. Use surface-mounted N-channel MOSFETs, which allow for a very short connection between the HS and LS MOSFETs.
2. Use wide copper areas for all of the high-current paths.
3. Connect the low-side sense resistor, which is composed of three resistors in parallel (R25, R26, and R27), to the input supply ground and LS MOSFET source terminals with wide copper areas.
4. Place the charge pump and supply bypass capacitors as close to the IC as possible.
5. Connect the grounded side of these capacitors to a ground plan, which should be connected to the device ground pin and exposed pad.
6. Keep the high-current ground path between the input supply, input bulk capacitor (C19), and MOSFETs away from this area.

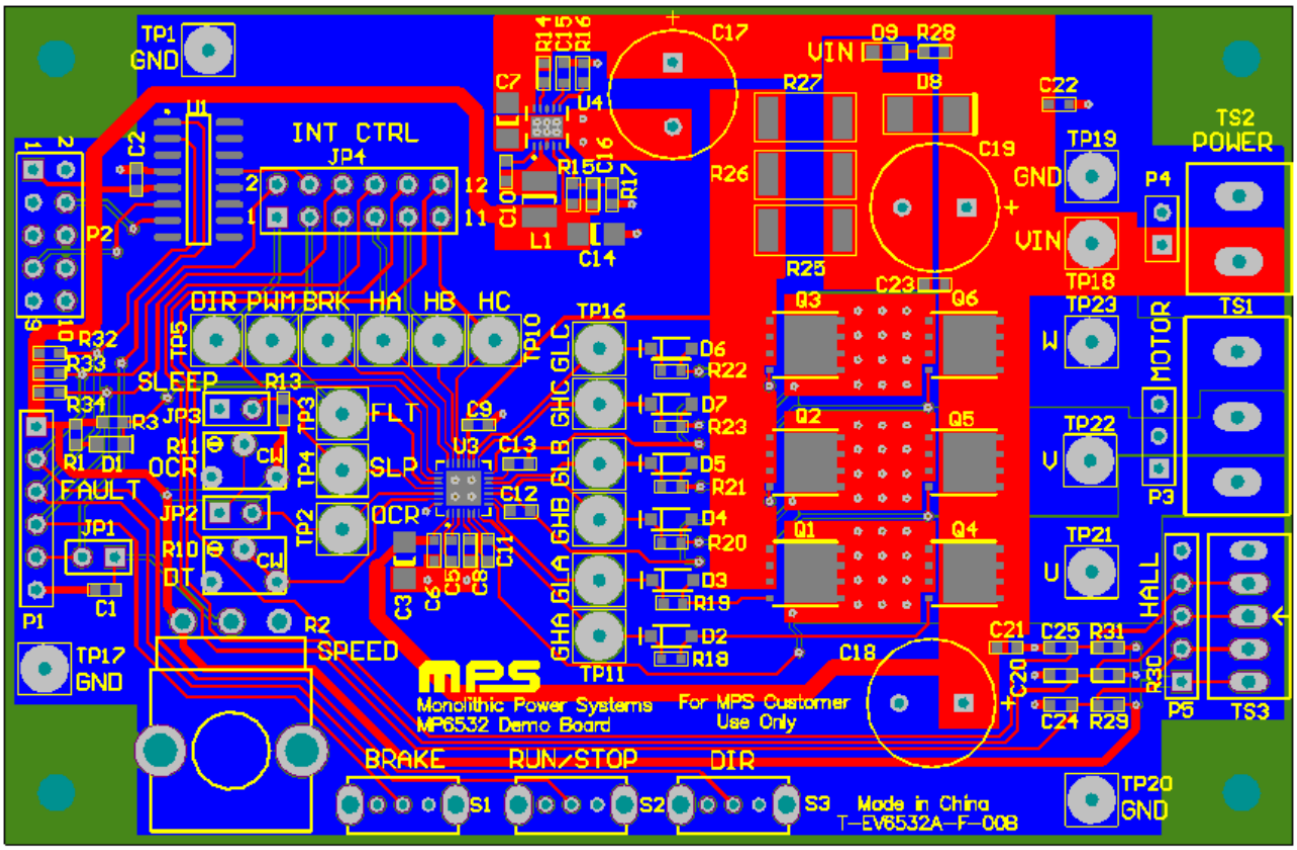

Figure 7: Recommended PCB Layout

MPS Proprietary Information. Patent Protected. Unauthorized Photocopy and Duplication Prohibited.
© 2021 MPS. All Rights Reserved.

PACKAGE INFORMATION

QFN-28 (4mm×5mm)

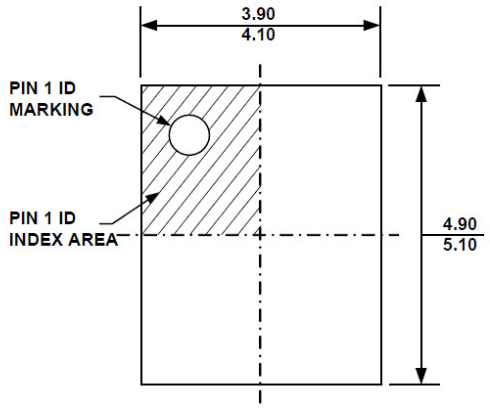

TOP VIEW

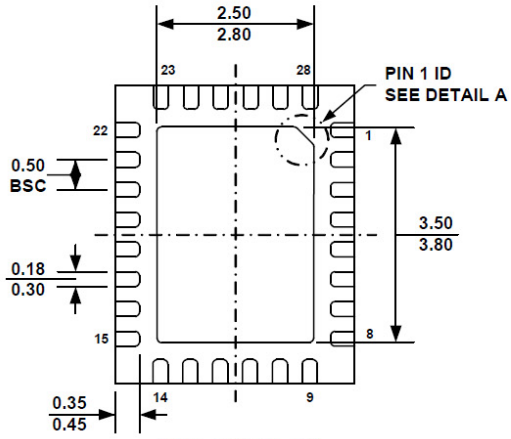

BOTTOM VIEW

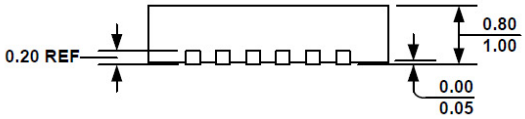

SIDE VIEW

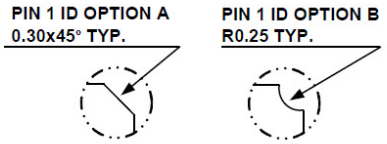

DETAIL A

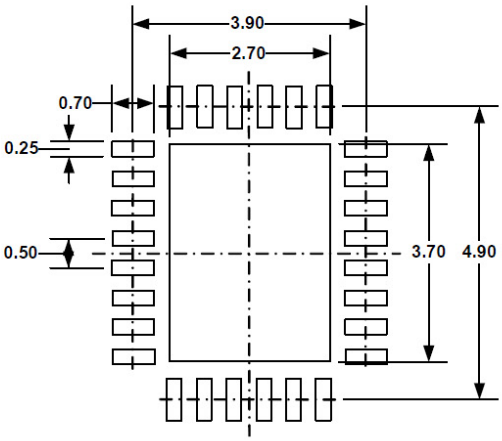

RECOMMENDED LAND PATTERN

NOTE:

1) ALL DIMENSIONS ARE IN MILLIMETERS.
2) EXPOSED PADDLE SIZE DOES NOT INCLUDE MOLD FLASH.
3) LEAD COPLANARITY SHALL BE 0.10 MILLIMETER MAX.
4) DRAWING CONFORMS TO JEDEC MO-220, VARIATION VHGD-3.
5) DRAWING IS NOT TO SCALE.

MPS Proprietary Information. Patent Protected. Unauthorized Photocopy and Duplication Prohibited.
© 2021 MPS. All Rights Reserved.

PACKAGE INFORMATION *(continued)*

QFN-28 (4mm×5mm)

Wettable Flank

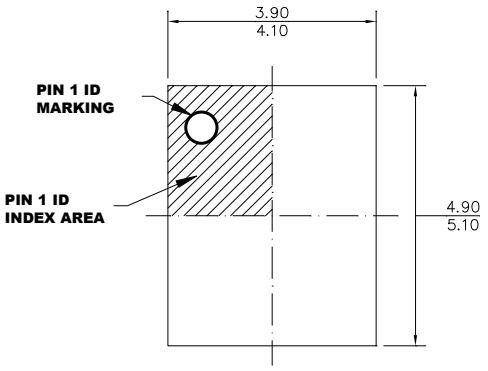

TOP VIEW

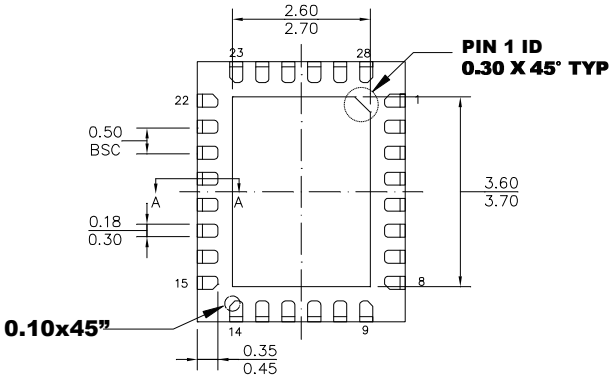

BOTTOM VIEW

SIDE VIEW

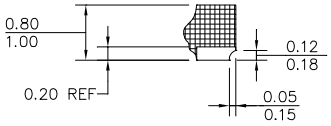

SECTION A-A

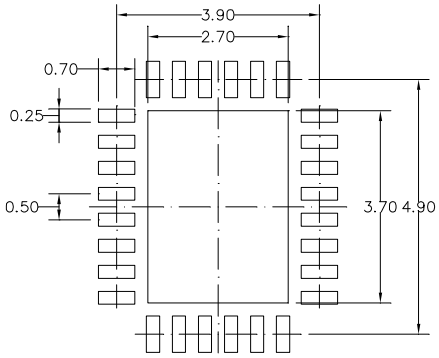

RECOMMENDED LAND PATTERN

NOTE:

1) ALL DIMENSIONS ARE IN MILLIMETERS.
2) EXPOSED PADDLE SIZE DOES NOT INCLUDE MOLD FLASH.
3) LEAD COPLANARITY SHALL BE 0.08 MILLIMETERS MAX.
4) DRAWING CONFIRMS TO JEDEC MO-220, VARIATION VGHD-3.
5) DRAWING IS NOT TO SCALE.

MPS Proprietary Information. Patent Protected. Unauthorized Photocopy and Duplication Prohibited.
© 2021 MPS. All Rights Reserved.

Revision History

Revision #	Revision Date	Description	Pages Updated
1.1	01/22/2021	1. Add wettable flank package to this part. 2. Update EC table test condition and note. 3. Update some grammar	Page 2, 4, 6, 7, 8, 16, 17, 19

NOTICE: The information in this document is subject to change without notice. Please contact MPS for current specifications. Users should warrant and guarantee that third party Intellectual Property rights are not infringed upon when integrating MPS products into any application. MPS will not assume any legal responsibility for any said applications.

MPS Proprietary Information. Patent Protected. Unauthorized Photocopy and Duplication Prohibited.
© 2021 MPS. All Rights Reserved.