General Description

The 843051 is a Gigabit Ethernet Clock Generator. The 843051 can synthesize 10 Gigabit Ethernet, SONET, or Serial ATA reference clock frequencies with the appropriate choice of crystal and output divider. The 843051 has excellent phase jitter performance and is packaged in a small 8-pin TSSOP, making it ideal for use in systems with limited board space.

Features

- One differential 3.3V LVPECL output
- Crystal oscillator interface designed for 18pF parallel resonant crystals
- RMS phase jitter at:
  155.52MHz (12kHz – 20MHz): 0.74ps (typical)
  156.25MHz (1.875MHz – 20MHz): 0.43ps (typical)
  161.13MHz (1.933Hz – 20MHz): 0.43ps (typical)

Offset	Noise Power
100Hz	-95 dBc/Hz
1kHz	-110 dBc/Hz
10kHz	-125 dBc/Hz
100kHz	-125 dBc/Hz

- Full 3.3V output supply mode
- 0°C to 70°C ambient operating temperature
- Available in lead-free (RoHS 6) package

Frequency Table

Inputs		Output Frequency Range (MHz)
Crystal Frequency (MHz)	FREQ_SEL	
20.141601	0	161.132812
20.141601	1	80.566406
19.53125	0	156.25
19.53125	1	78.125
19.44	0	155.52
19.44	1	77.76
18.75	0	150
18.75	1	75

Block Diagram

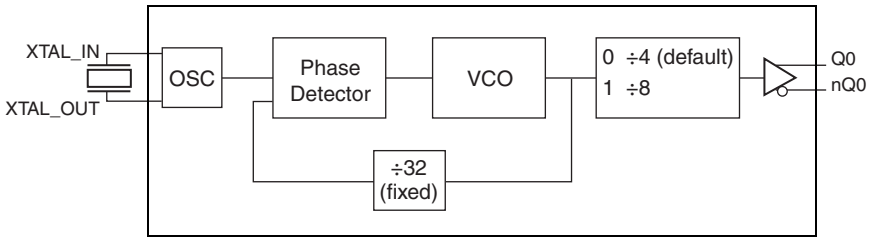

Pin Assignment

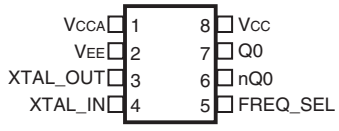

843051
8 Lead TSSOP
4.40mm x 3.0mm package body

© 2019 Renesas Electronics Corporation

Table 1. Pin Descriptions

Number	Name	Type		Description
1	V_{CCA}	Power		Analog supply pin
2	V_{EE}	Power		Negative supply pin.
3, 4	XTAL_OUT XTAL_IN	Input		Crystal oscillator interface. XTAL_IN is the input, XTAL_OUT is the output.
5	FREQ_SEL	Input	Pulldown	Frequency select pin. LVCMOS/LVTTL interface levels.
6, 7	nQ0, Q0	Output		Differential output pair. LVPECL interface levels.
8	V_{CC}	Power		Core supply pin.

NOTE: *Pulldown* refers to internal input resistors. See Table 2, *Pin Characteristics,* for typical values.

Table 2. Pin Characteristics

Symbol	Parameter	Test Conditions	Minimum	Typical	Maximum	Units
C_{IN}	Input Capacitance			4		pF
$R_{PULLDOWN}$	Input Pulldown Resistor			51		kΩ

Absolute Maximum Ratings

NOTE: Stresses beyond those listed under *Absolute Maximum Ratings* may cause permanent damage to the device. These ratings are stress specifications only. Functional operation of product at these conditions or any conditions beyond those listed in the *DC Characteristics or AC Characteristics* is not implied. Exposure to absolute maximum rating conditions for extended periods may affect product reliability.

Item	Rating
Supply Voltage, V_{CC}	4.6V
Inputs, V_I	-0.5V to V_{CC} + 0.5V
Outputs, I_O Continuous Current Surge Current	 50mA 100mA
Package Thermal Impedance, θ_{JA}	101.7°C/W (0 mps)
Storage Temperature, T_{STG}	-65°C to 150°C

DC Electrical Characteristics

Table 3A. Power Supply DC Characteristics, V_{CC} = 3.3V ± 5%, V_{EE} = 0V, T_A = 0°C to 70°C

Symbol	Parameter	Test Conditions	Minimum	Typical	Maximum	Units
V_{CC}	Core Supply Voltage		3.135	3.3	3.465	V
V_{CCA}	Analog Supply Voltage		3.135	3.3	3.465	V
I_{CC}	Power Supply Current				70	mA
I_{CCA}	Analog Supply Current				15	mA
I_{EE}	Power Supply Current				85	mA

© 2019 Renesas Electronics Corporation

Table 3B. LVCMOS/LVTTL DC Characteristics, V_{CC} = 3.3V ± 5%, V_{EE} = 0V, T_A = 0°C to 70°C

Symbol	Parameter	Test Conditions	Minimum	Typical	Maximum	Units
V_{IH}	Input High Voltage		2		V_{CC} + 0.3	V
V_{IL}	Input Low Voltage		-0.3		0.8	V
I_{IH}	Input High Current	V_{CC} = V_{IN} = 3.465V			150	µA
I_{IL}	Input Low Current	V_{CC} = 3.465V, V_{IN} = 0V	-5			µA

Table 3C. LVPECL DC Characteristics, V_{CC} = 3.3V ± 5%, V_{EE} = 0V, T_A = 0°C to 70°C

Symbol	Parameter	Test Conditions	Minimum	Typical	Maximum	Units
V_{OH}	Output High Voltage; NOTE 1		V_{CC} – 1.4		V_{CC} – 0.9	V
V_{OL}	Output Low Voltage; NOTE 1		V_{CC} – 2.0		V_{CC} – 1.7	V
V_{SWING}	Peak-to-Peak Output Voltage Swing		0.6		1.0	V

NOTE 1: Outputs termination with 50Ω to V_{CC} – 2V.

Table 4. Crystal Characteristics

Parameter	Test Conditions	Minimum	Typical	Maximum	Units
Mode of Oscillation		Fundamental			
Frequency		12		40	MHz
Equivalent Series Resistance (ESR)				50	Ω
Shunt Capacitance				7	pF

AC Electrical Characteristics

Table 5. AC Characteristics, V_{CC} = 3.3V ± 5%, V_{EE} = 0V, T_A = 0°C to 70°

Symbol	Parameter		Minimum	Typical	Maximum	Units
f_{OUT}	Output Frequency			155.52		MHz
				156.25		MHz
				161.13		MHz
t_{jit}(Ø)	RMS Phase Jitter, Random; NOTE 1	155.52MHz, Integration Range: 12kHz – 20MHz		0.74		ps
		156.25MHz, Integration Range: 1.875MHz – 20MHz		0.43		ps
		156.25MHz, Integration Range: 12kHz – 20MHz		0.75		ps
		161.13MHz, Integration Range: 1.933MHz – 20MHz		0.43		ps
		161.13MHz, Integration Range: 12kHz – 20MHz		0.72		ps
t_R / t_F	Output Rise/Fall Time	20% to 80%	325		600	ps
odc	Output Duty Cycle		49		51	%

NOTE: Electrical parameters are guaranteed over the specified ambient operating temperature range, which is established when the device is mounted in a test socket with maintained transverse airflow greater than 500 lfpm. The device will meet specifications after thermal equilibrium has been reached under these conditions.
NOTE 1: Please refer to Phase Noise Plot.

© 2019 Renesas Electronics Corporation

Typical Phase Noise at 155.52MHz

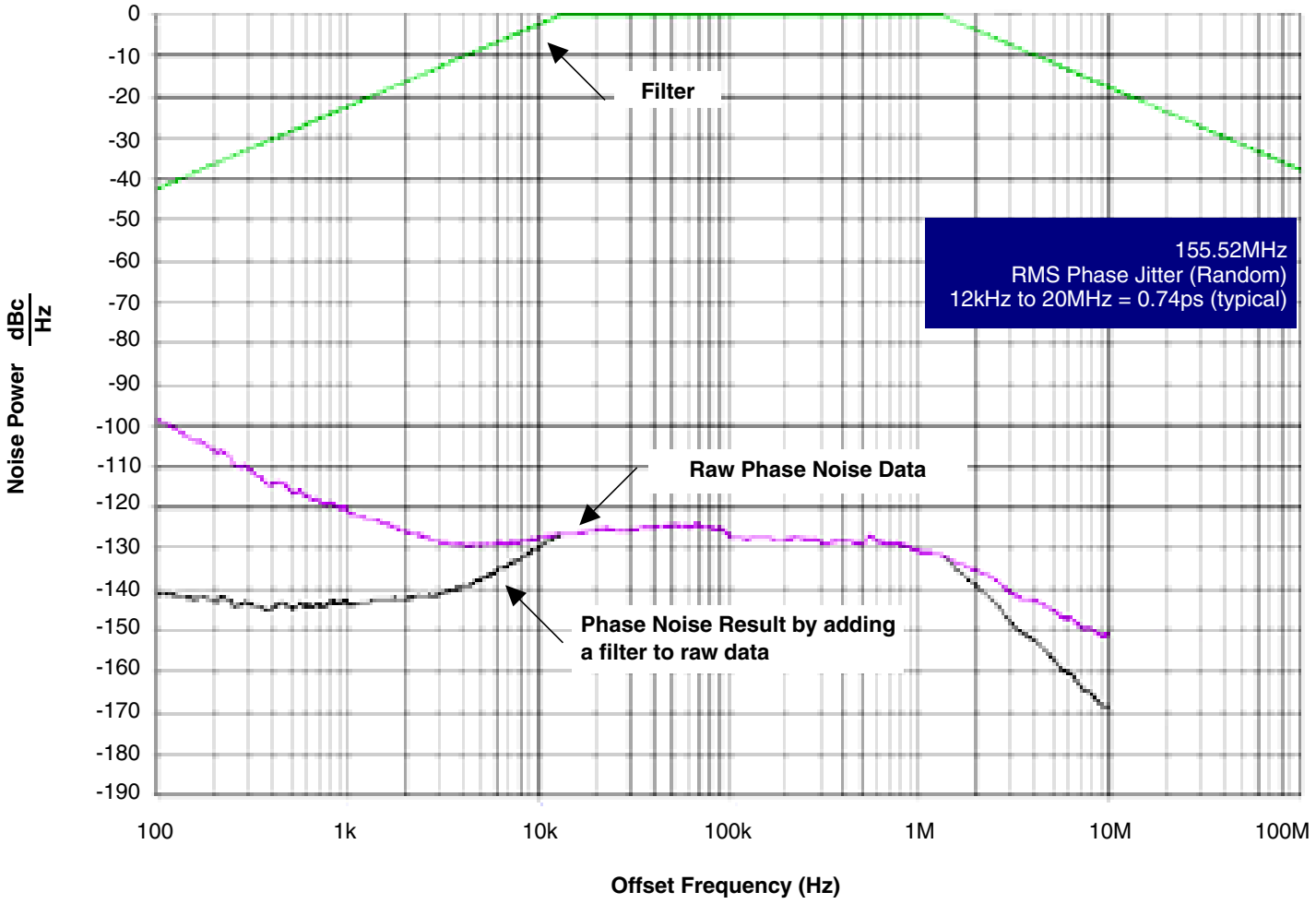

© 2019 Renesas Electronics Corporation

Typical Phase Noise at 156.25MHz

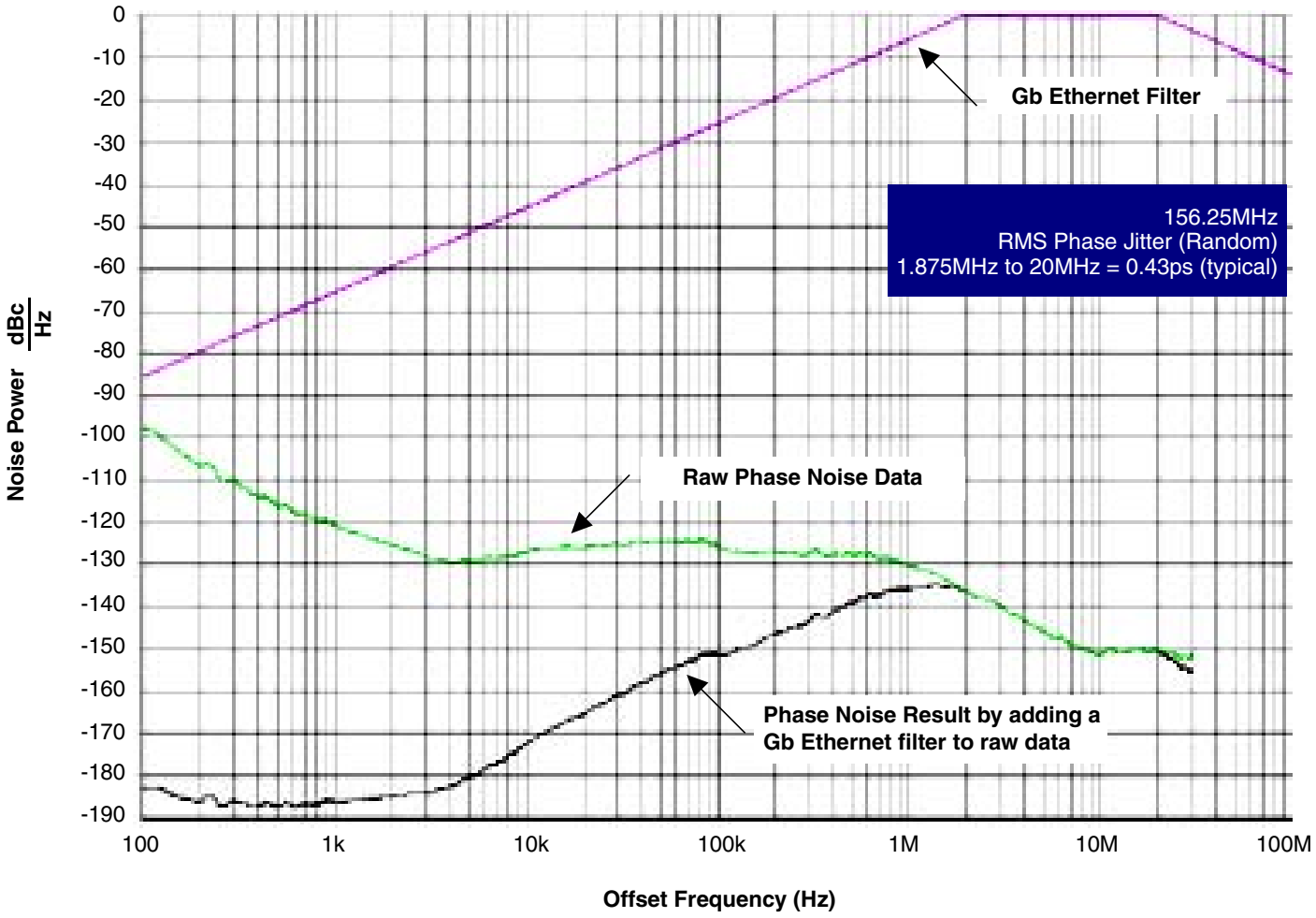

© 2019 Renesas Electronics Corporation

Typical Phase Noise at 161.13MHz

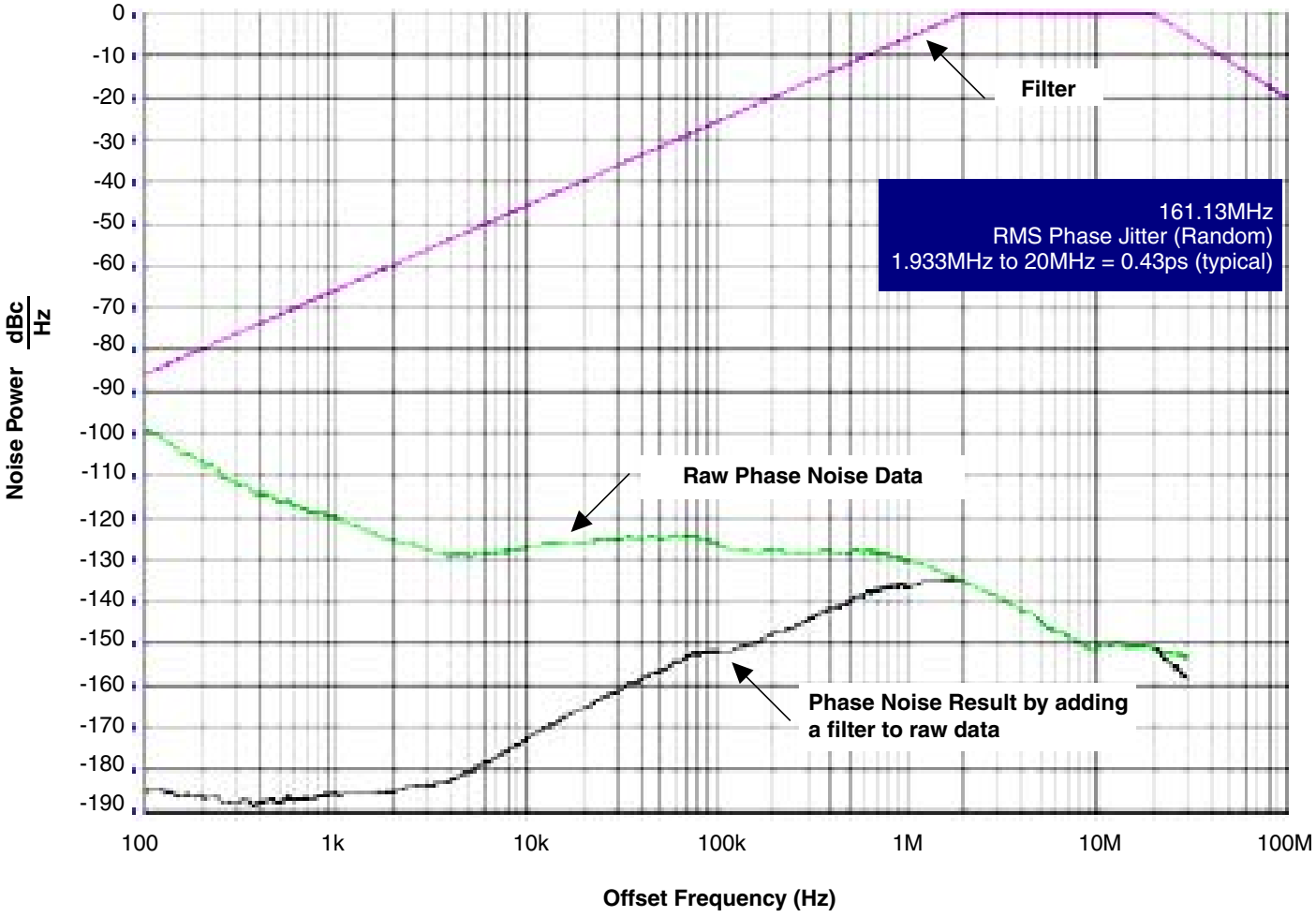

© 2019 Renesas Electronics Corporation

Parameter Measurement Information

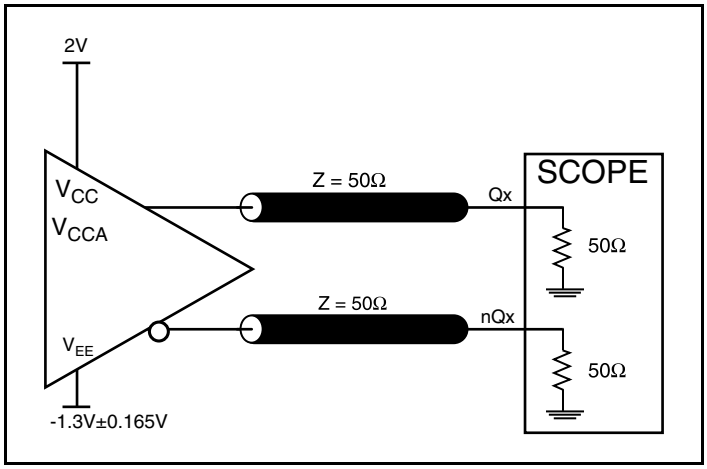

3.3V LVPECL Output Load AC Test Circuit

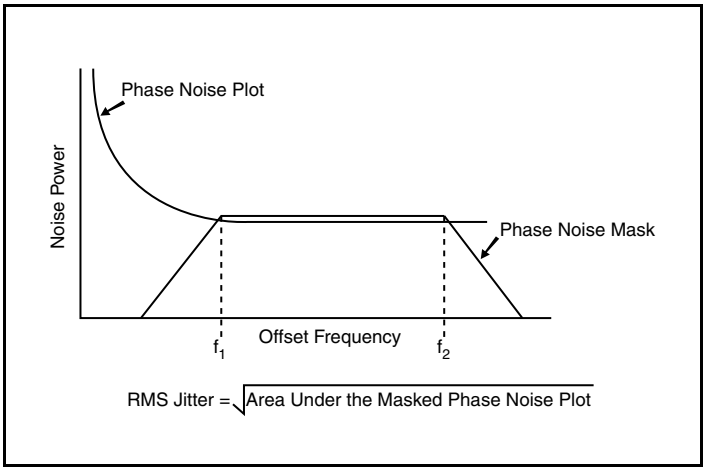

RMS Phase Jitter

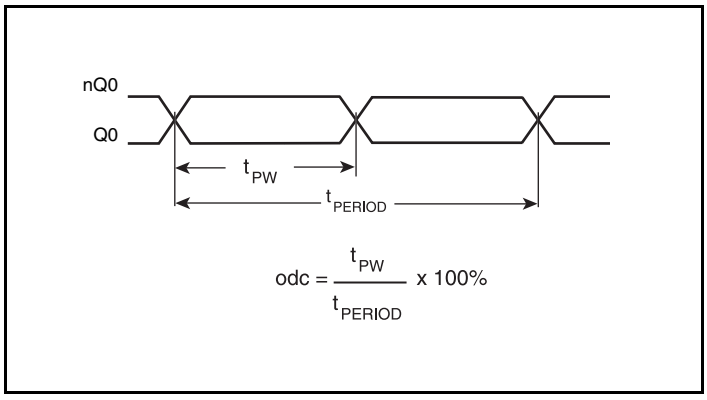

Output Duty Cycle/Pulse Width/Period

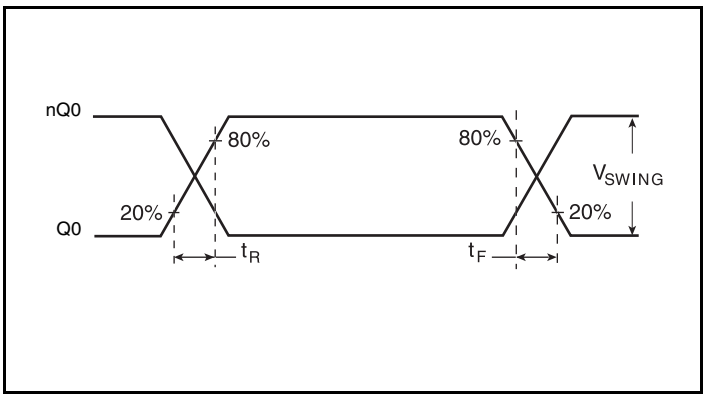

Output Rise/Fall Time

© 2019 Renesas Electronics Corporation

Applications Information

Power Supply Filtering Technique

As in any high speed analog circuitry, the power supply pins are vulnerable to random noise. To achieve optimum jitter performance, power supply isolation is required. The 843051 provides separate power supplies to isolate any high switching noise from the outputs to the internal PLL. V_{CC} and V_{CCA} should be individually connected to the power supply plane through vias, and 0.01µF bypass capacitors should be used for each pin. *Figure 1* illustrates this for a generic V_{CC} pin and also shows that V_{CCA} requires that an additional 10Ω resistor along with a 10µF bypass capacitor be connected to the V_{CCA} pin.

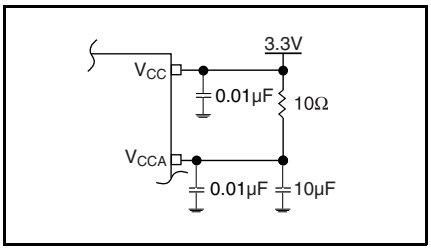

Figure 1. Power Supply Filtering

Crystal Input Interface

The 843051 has been characterized with 18pF parallel resonant crystals. The capacitor values, C1 and C2, shown in *Figure 2* below were determined using a 26.04167MHz, 18pF parallel resonant crystal and were chosen to minimize the ppm error. The optimum C1 and C2 values can be slightly adjusted for different board layouts.

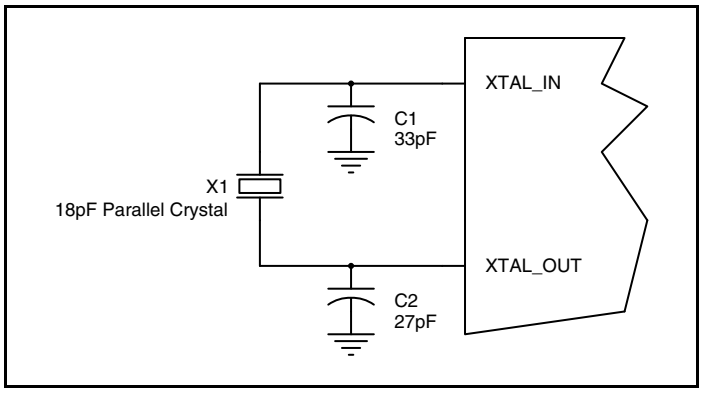

Figure 2. Crystal Input Interface

© 2019 Renesas Electronics Corporation

Overdriving the XTAL Interface

The XTAL_IN input can be overdriven by an LVCMOS driver or by one side of a differential driver through an AC coupling capacitor. The XTAL_OUT pin can be left floating. The amplitude of the input signal should be between 500mV and 1.8V and the slew rate should not be less than 0.2V/ns. For 3.3V LVCMOS inputs, the amplitude must be reduced from full swing to at least half the swing in order to prevent signal interference with the power rail and to reduce internal noise. *Figure 3A* shows an example of the interface diagram for a high speed 3.3V LVCMOS driver. This configuration requires that the sum of the output impedance of the driver (Ro) and the series resistance (Rs) equals the transmission line impedance. In addition, matched termination at the crystal input will attenuate the signal in half. This can be done in one of two ways. First, R1 and R2 in parallel should equal the transmission line impedance. For most 50Ω applications, R1 and R2 can be 100Ω. This can also be accomplished by removing R1 and changing R2 to 50Ω. The values of the resistors can be increased to reduce the loading for a slower and weaker LVCMOS driver. *Figure 3B* shows an example of the interface diagram for an LVPECL driver. This is a standard LVPECL termination with one side of the driver feeding the XTAL_IN input. It is recommended that all components in the schematics be placed in the layout. Though some components might not be used, they can be utilized for debugging purposes. The datasheet specifications are characterized and guaranteed by using a quartz crystal as the input.

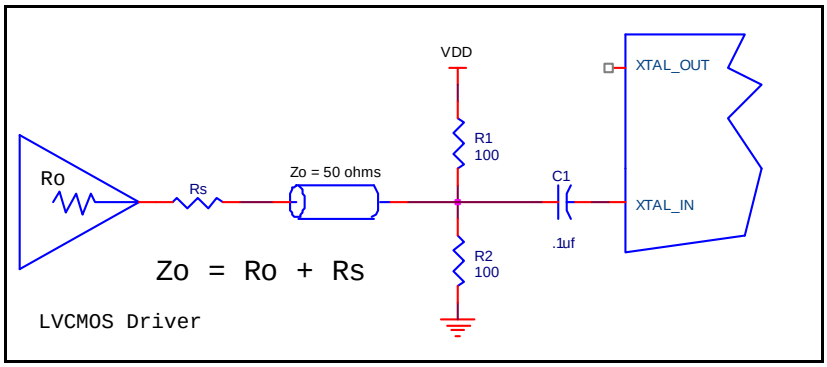

Figure 3A. General Diagram for LVCMOS Driver to XTAL Input Interface

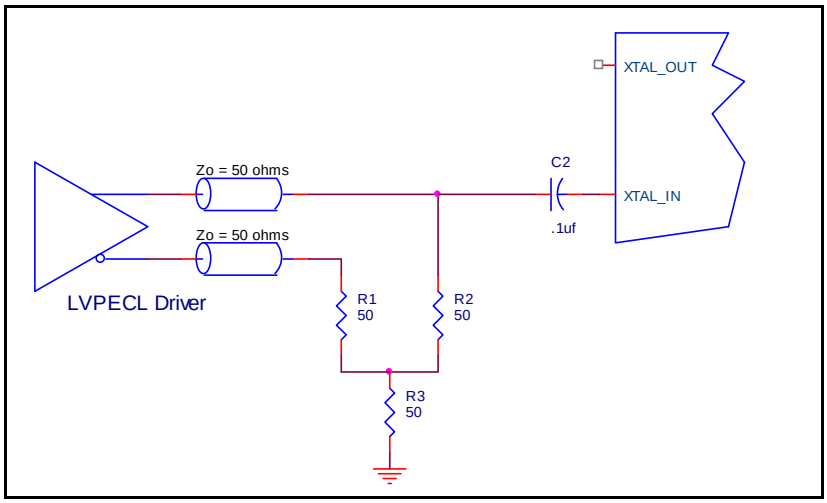

Figure 3B. General Diagram for LVPECL Driver to XTAL Input Interface

© 2019 Renesas Electronics Corporation

Termination for 3.3V LVPECL Outputs

The clock layout topology shown below is a typical termination for LVPECL outputs. The two different layouts mentioned are recommended only as guidelines.

The differential outputs are low impedance follower outputs that generate ECL/LVPECL compatible outputs. Therefore, terminating resistors (DC current path to ground) or current sources must be used for functionality. These outputs are designed to drive 50Ω transmission lines. Matched impedance techniques should be used to maximize operating frequency and minimize signal distortion. *Figures 4A and 4B* show two different layouts which are recommended only as guidelines. Other suitable clock layouts may exist and it would be recommended that the board designers simulate to guarantee compatibility across all printed circuit and clock component process variations.

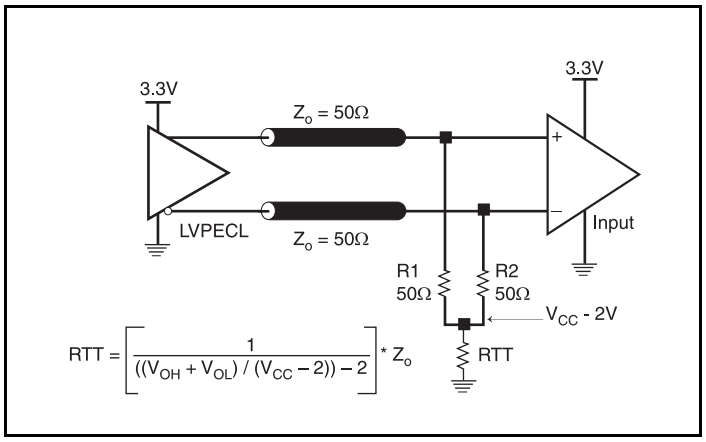

Figure 4A. 3.3V LVPECL Output Termination

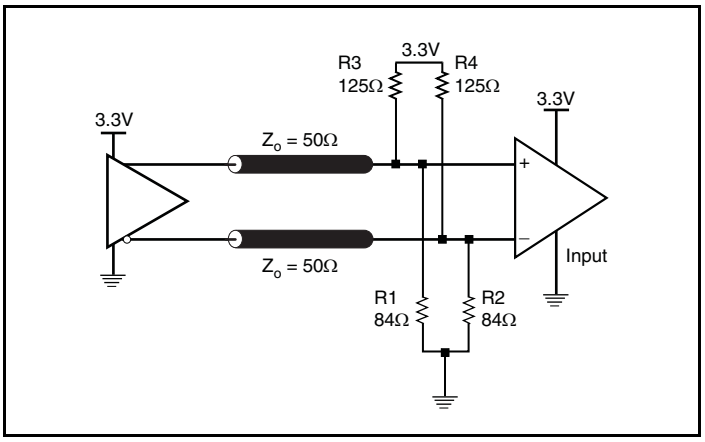

Figure 4B. 3.3V LVPECL Output Termination

© 2019 Renesas Electronics Corporation

Schematic Example

Figure 5A shows a schematic example of the 843051. An example of LVEPCL termination is shown in this schematic. Additional LVPECL termination approaches are shown in the LVPECL Termination Application Note. In this example, an 18pF parallel resonant crystal is used. The C1 = 27pF and C2 = 33pF are recommended for frequency accuracy. The C1 and C2 values may be slightly adjusted for optimizing frequency accuracy.

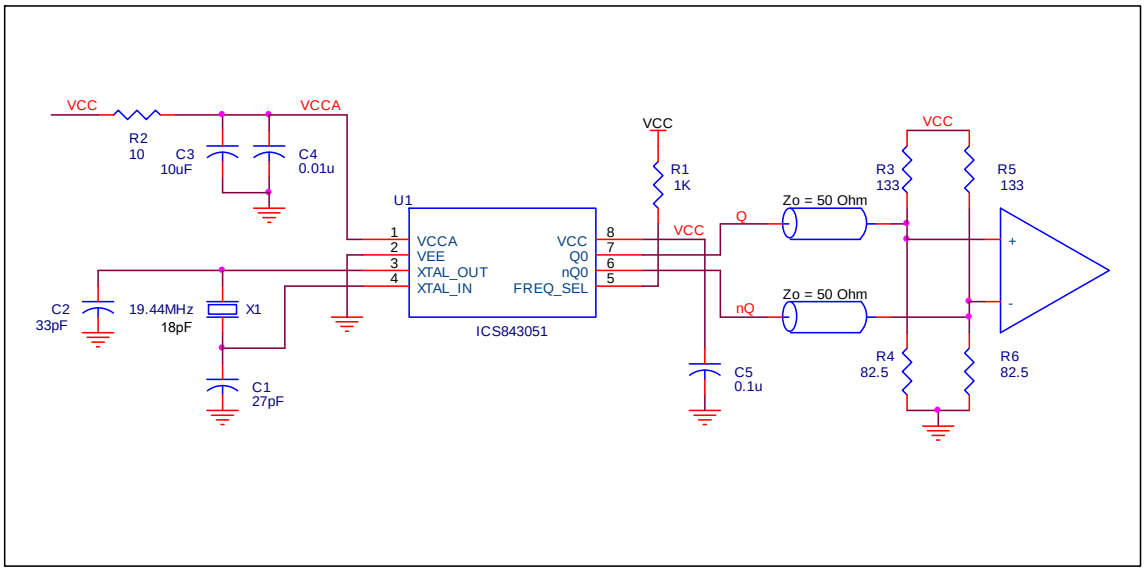

Figure 5A. 843051 Schematic Example

PC Board Layout Example

Figure 5B shows an example of 843051 P.C. board layout. The crystal X1 footprint shown in this example allows installation of either surface mount HC49S or through-hole HC49 package. The footprints of other components in this example are listed in the *Table 6.* There should be at least one decoupling capacitor per power pin. The decoupling capacitors should be located as close as possible to the power pins. The layout assumes that the board has clean analog power ground plane.

Figure 5B. 843051 PC Board Layout Example

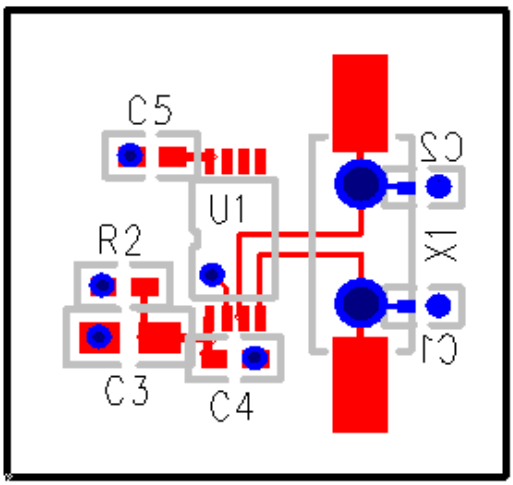

Table 6. Footprint Table

Reference	Size
C1, C2	0402
C3	0805
C4, C5	0603
R2	0603

NOTE: Table 6 lists component sizes shown in this layout example.

© 2019 Renesas Electronics Corporation

Power Considerations

This section provides information on power dissipation and junction temperature for the 843051.
Equations and example calculations are also provided.

1. Power Dissipation.

The total power dissipation for the 843051 is the sum of the core power plus the power dissipated in the load(s).
The following is the power dissipation for V_{CC} = 3.3V + 5% = 3.465V, which gives worst case results.

NOTE: Please refer to Section 3 for details on calculating power dissipated in the load.

- Power $(core)_{MAX} = V_{CC_MAX} * I_{EE_MAX}$ = 3.465V * 85mA = **294.5mW**
- Power $(outputs)_{MAX}$ = **30mW/Loaded Output pair**

Total Power$_{_MAX}$ (3.465V, with all outputs switching) = 294.5mW + 30mW = **324.5mW**

2. Junction Temperature.

Junction temperature, Tj, is the temperature at the junction of the bond wire and bond pad directly affects the reliability of the device. The maximum recommended junction temperature is 125°C. Limiting the internal transistor junction temperature, Tj, to 125°C ensures that the bond wire and bond pad temperature remains below 125°C.

The equation for Tj is as follows: $Tj = \theta_{JA} * Pd_total + T_A$

Tj = Junction Temperature

θ_{JA} = Junction-to-Ambient Thermal Resistance

Pd_total = Total Device Power Dissipation (example calculation is in section 1 above)

T_A = Ambient Temperature

In order to calculate junction temperature, the appropriate junction-to-ambient thermal resistance θ_{JA} must be used. Assuming a moderate air flow of 1 meter per second and a multi-layer board, the appropriate value is 90.5°C/W per Table 7 below.

Therefore, Tj for an ambient temperature of 70°C with all outputs switching is:

70°C + 0.324W * 90.5°C/W = 99.3°C. This is below the limit of 125°C.

This calculation is only an example. Tj will obviously vary depending on the number of loaded outputs, supply voltage, air flow and the type of board (multi-layer).

Table 7. Thermal Resitance θ_{JA} for 8 Lead TSSOP, Forced Convection

θ_{JA} **vs. Air Flow**			
Meters per Second	**0**	**1**	**2.5**
Multi-Layer PCB, JEDEC Standard Test Boards	101.7°C/W	90.5°C/W	89.8°C/W

© 2019 Renesas Electronics Corporation

3. Calculations and Equations.

The purpose of this section is to calculate the power dissipation for the LVPECL output pair.

LVPECL output driver circuit and termination are shown in *Figure 6.*

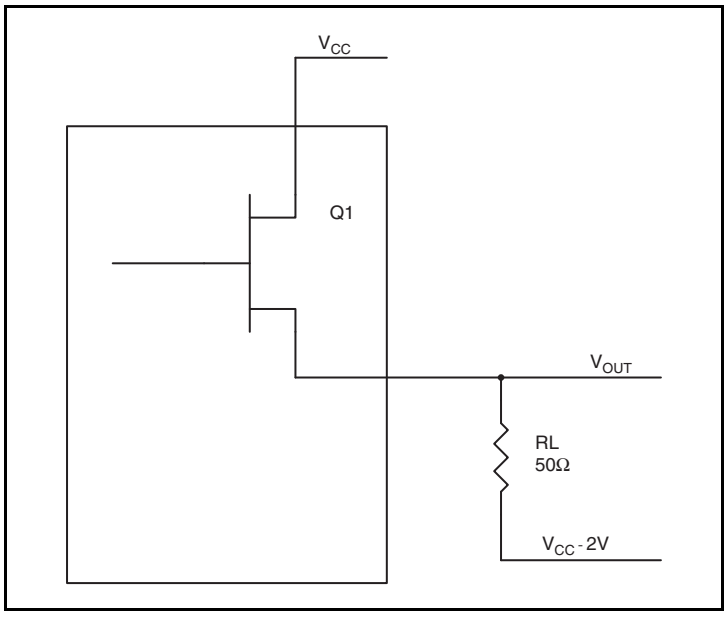

Figure 6. LVPECL Driver Circuit and Termination

To calculate worst case power dissipation into the load, use the following equations which assume a 50Ω load, and a termination voltage of V_{CC} – 2V.

- For logic high, $V_{OUT} = V_{OH_MAX} = \mathbf{V_{CC_MAX} - 0.9V}$
  $(V_{CC_MAX} - V_{OH_MAX}) = \mathbf{0.9V}$
- For logic low, $V_{OUT} = V_{OL_MAX} = \mathbf{V_{CC_MAX} - 1.7V}$
  $(V_{CC_MAX} - V_{OL_MAX}) = \mathbf{1.7V}$

Pd_H is power dissipation when the output drives high.

Pd_L is the power dissipation when the output drives low.

$Pd_H = [(V_{OH_MAX} - (V_{CC_MAX} - 2V))/R_L] * (V_{CC_MAX} - V_{OH_MAX}) = [(2V - (V_{CC_MAX} - V_{OH_MAX}))/R_L] * (V_{CC_MAX} - V_{OH_MAX}) =$
$[(2V - 0.9V)/50\Omega] * 0.9V =$ **19.8mW**

$Pd_L = [(V_{OL_MAX} - (V_{CC_MAX} - 2V))/R_L] * (V_{CC_MAX} - V_{OL_MAX}) = [(2V - (V_{CC_MAX} - V_{OL_MAX}))/R_L] * (V_{CC_MAX} - V_{OL_MAX}) =$
$[(2V - 1.7V)/50\Omega] * 1.7V =$ **10.2mW**

Total Power Dissipation per output pair = Pd_H + Pd_L = **30mW**

© 2019 Renesas Electronics Corporation

Reliability Information

Table 8. θ_{JA} vs. Air Flow Table for a 8 Lead TSSOP

θ_{JA} vs. Air Flow			
Meters per Second	**0**	**1**	**2.5**
Multi-Layer PCB, JEDEC Standard Test Boards	101.7°C/W	90.5°C/W	89.8°C/W

Transistor Count

The transistor count for 843051 is: 1892

Package Outline and Package Dimensions

Package Outline - G Suffix for 8 Lead TSSOP

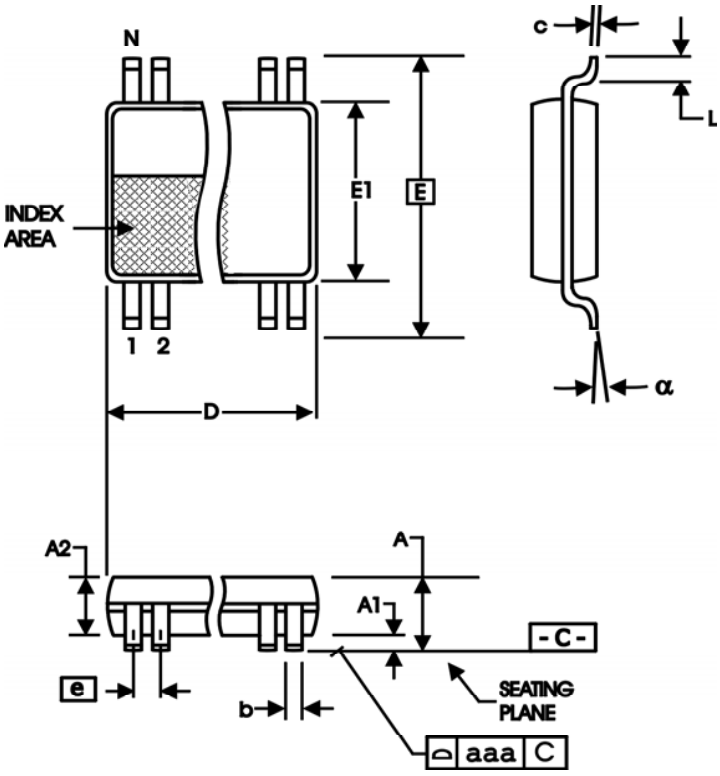

Table 9. Package Dimensions

All Dimensions in Millimeters		
Symbol	**Minimum**	**Maximum**
N	8	
A		1.20
A1	0.5	0.15
A2	0.80	1.05
b	0.19	0.30
c	0.09	0.20
D	2.90	3.10
E	6.40 Basic	
E1	4.30	4.50
e	0.65 Basic	
L	0.45	0.75
α	0°	8°
aaa		0.10

Reference Document: JEDEC Publication 95, MO-153

© 2019 Renesas Electronics Corporation

Ordering Information

Table 10. Ordering Information

Part/Order Number	Marking	Package	Shipping Packaging	Temperature
843051AGLF	051AL	“Lead-Free” 8 Lead TSSOP	Tube	0°C to 70°C
843051AGLFT	051AL	“Lead-Free” 8 Lead TSSOP	Tape & Reel	0°C to 70°C

© 2019 Renesas Electronics Corporation

Revision History Sheet

Rev	Table	Page	Description of Change	Date
A	T10	14	Ordering Information Table - corrected count from 154 per tube to 100 per tube.	11/16/04
A	 T10	1 14	Added Lead-Free bullet in Features section. Ordering Information Table - added "Lead-Free" part.	12/14/04
A	T10	14	Ordering Information Table/Shipping Packaging column - deleted tube quantity.	1/19/07
A		9	Added *LVCMOS to XTAL Interface* section.	3/5/08
A	T3C T5	3 3 9	LVPECL DC Characteristics Table - corrected V_{OH}/V_{OL} parameters from “Current” to “Voltage” and units from "uA" to "V". AC Characteristics Table - added thermal note. Updated “Overdriving the Crystal Interface” section. Updated header/footer.	10/13/10
B	 T10	 1 9 15	Updated header/footer through the datasheet. Deleted IDT prefix from part number. Features Section - deleted leaded information in the last bullet. Added outline box around Block Diagram. Updated *Overdriving the XTAL Interface* application note. Ordering Information table - deleted leaded parts rows and note.	10/15/15

© 2019 Renesas Electronics Corporation

IMPORTANT NOTICE AND DISCLAIMER

RENESAS ELECTRONICS CORPORATION AND ITS SUBSIDIARIES (“RENESAS”) PROVIDES TECHNICAL SPECIFICATIONS AND RELIABILITY DATA (INCLUDING DATASHEETS), DESIGN RESOURCES (INCLUDING REFERENCE DESIGNS), APPLICATION OR OTHER DESIGN ADVICE, WEB TOOLS, SAFETY INFORMATION, AND OTHER RESOURCES “AS IS” AND WITH ALL FAULTS, AND DISCLAIMS ALL WARRANTIES, EXPRESS OR IMPLIED, INCLUDING, WITHOUT LIMITATION, ANY IMPLIED WARRANTIES OF MERCHANTABILITY, FITNESS FOR A PARTICULAR PURPOSE, OR NON-INFRINGEMENT OF THIRD PARTY INTELLECTUAL PROPERTY RIGHTS.

These resources are intended for developers skilled in the art designing with Renesas products. You are solely responsible for (1) selecting the appropriate products for your application, (2) designing, validating, and testing your application, and (3) ensuring your application meets applicable standards, and any other safety, security, or other requirements. These resources are subject to change without notice. Renesas grants you permission to use these resources only for development of an application that uses Renesas products. Other reproduction or use of these resources is strictly prohibited. No license is granted to any other Renesas intellectual property or to any third party intellectual property. Renesas disclaims responsibility for, and you will fully indemnify Renesas and its representatives against, any claims, damages, costs, losses, or liabilities arising out of your use of these resources. Renesas' products are provided only subject to Renesas' Terms and Conditions of Sale or other applicable terms agreed to in writing. No use of any Renesas resources expands or otherwise alters any applicable warranties or warranty disclaimers for these products.

(Rev.1.0 Mar 2020)

Corporate Headquarters

TOYOSU FORESIA, 3-2-24 Toyosu,
Koto-ku, Tokyo 135-0061, Japan
www.renesas.com

Contact Information

For further information on a product, technology, the most up-to-date version of a document, or your nearest sales office, please visit:
www.renesas.com/contact/

Trademarks

Renesas and the Renesas logo are trademarks of Renesas Electronics Corporation. All trademarks and registered trademarks are the property of their respective owners.

© 2020 Renesas Electronics Corporation. All rights reserved.