QSpan II™
User Manual

Final Manual
May 16, 2013

© 2019 Renesas Electronics Corporation

GENERAL DISCLAIMER

Integrated Device Technology, Inc. reserves the right to make changes to its products or specifications at any time, without notice, in order to improve design or performance and to supply the best possible product. IDT does not assume any responsibility for use of any circuitry described other than the circuitry embodied in an IDT product. The Company makes no representations that circuitry described herein is free from patent infringement or other rights of third parties which may result from its use. No license is granted by implication or otherwise under any patent, patent rights or other rights, of Integrated Device Technology, Inc.

CODE DISCLAIMER

Code examples provided by IDT are for illustrative purposes only and should not be relied upon for developing applications. Any use of the code examples below is completely at your own risk. IDT MAKES NO REPRESENTATIONS OR WARRANTIES OF ANY KIND CONCERNING THE NONINFRINGEMENT, QUALITY, SAFETY OR SUITABILITY OF THE CODE, EITHER EXPRESS OR IMPLIED, INCLUDING WITHOUT LIMITATION ANY IMPLIED WARRANTIES OF MERCHANTABILITY, FITNESS FOR A PARTICULAR PURPOSE, OR NON-INFRINGEMENT. FURTHER, IDT MAKES NO REPRESENTATIONS OR WARRANTIES AS TO THE TRUTH, ACCURACY OR COMPLETENESS OF ANY STATEMENTS, INFORMATION OR MATERIALS CONCERNING CODE EXAMPLES CONTAINED IN ANY IDT PUBLICATION OR PUBLIC DISCLOSURE OR THAT IS CONTAINED ON ANY IDT INTERNET SITE. IN NO EVENT WILL IDT BE LIABLE FOR ANY DIRECT, CONSEQUENTIAL, INCIDENTAL, INDIRECT, PUNITIVE OR SPECIAL DAMAGES, HOWEVER THEY MAY ARISE, AND EVEN IF IDT HAS BEEN PREVIOUSLY ADVISED ABOUT THE POSSIBILITY OF SUCH DAMAGES. The code examples also may be subject to United States export control laws and may be subject to the export or import laws of other countries and it is your responsibility to comply with any applicable laws or regulations.

LIFE SUPPORT POLICY

Integrated Device Technology's products are not authorized for use as critical components in life support devices or systems unless a specific written agreement pertaining to such intended use is executed between the manufacturer and an officer of IDT.

1. Life support devices or systems are devices or systems which (a) are intended for surgical implant into the body or (b) support or sustain life and whose failure to perform, when properly used in accordance with instructions for use provided in the labeling, can be reasonably expected to result in a significant injury to the user.
2. A critical component is any components of a life support device or system whose failure to perform can be reasonably expected to cause the failure of the life support device or system, or to affect its safety or effectiveness.

IDT, the IDT logo, and Integrated Device Technology are trademarks or registered trademarks of Integrated Device Technology, Inc.

© 2019 Renesas Electronics Corporation

Revision History

Final Manual, May 16, 2013
This version was updated to include general improvements.

8091862.MA001.08, Final Manual, November 2009
This version of the document was rebranded as IDT. It does not include any technical changes.

8091862.MA001.07, Final Manual, January 2007

- Corrected the description of the BS field in the PBTI0_CTL, PBTI1_CTL, QBSI0_AT, and QBSI1_AT registers (see "Register Map" on page 195).
- Updated the Ordering Information section to indicate a reduction in the variety of QSpan II parts available to customers (see "Ordering Information" on page 405).

8091862.MA001.06, Final Manual, September 2000

8091862.MA001.05, Final Manual, September 2000

8091862.MA001.04, Preliminary Manual, December 1999

8091862.MA001.03, Preliminary Manual, September 1999

8091862.MA001.02, Preliminary Manual, September 1999

8091862.MA001.01, Preliminary Manual, August 1999

© 2019 Renesas Electronics Corporation

© 2019 Renesas Electronics Corporation

Contents

Chapter 1: General Information 23
1.1 What is the QSpan II 24
1.1.1 QSpan II Features 25
1.1.2 QSpan II verses QSpan 26
1.2 Document Conventions 27
1.2.1 Signals 27
1.2.2 Bit Ordering 27
1.2.3 Numeric Conventions 27
1.2.4 Topographic Conventions 27
1.2.5 Symbols 28
1.2.6 Document Status 28
1.3 Related Documentation 28

Chapter 2: Functional Overview 29
2.1 Overview 29
2.2 The QBus Slave Channel 30
2.3 The PCI Target Channel 31
2.4 The IDMA Channel 31
2.5 The DMA Channel 31
2.6 The Register Channel 31
2.7 The Interrupt Channel 32
2.8 The EEPROM Channel 32

Chapter 3: The QBus Slave Channel 33
3.1 Overview 33
3.2 QBus Slave Channel Architecture 34
3.2.1 QBus Slave Module 35
3.2.1.1 QBus Data Parity Generation and Detection 35
3.2.2 Qx-FIFO and Qr-FIFO 36
3.2.3 PCI Master Module 36
3.3 Channel Description 36

© 2019 Renesas Electronics Corporation

3.4 Address Phase 37
3.4.1 Transaction Decoding and QBus Slave Images 37
3.4.1.1 MPC860 Cycles 39
3.4.1.2 MC68360 Cycles 39
3.4.1.3 M68040 Cycles. 39
3.4.2 PCI Bus Request 40
3.4.3 Address Translation 40
3.4.4 Address Phase on the PCI Bus 43
3.5 Data Phase 44
3.5.1 Endian Mapping 44
3.5.2 Data Path. 46
3.5.2.1 Writes 46
3.5.2.2 Read Transactions — Burst and Single Cycle 48
3.5.2.3 Prefetched Reads 48
3.5.2.4 Delayed Reads and PCI Transaction Ordering. 49
3.5.3 PCI Target Channel Reads 50
3.5.4 Parity Monitoring by PCI Master Module 50
3.6 Termination Phase 51
3.6.1 Posted Write Termination 53
3.7 PCI Master Retry Counter 54

Chapter 4: The PCI Target Channel 55

4.1 Overview 55
4.2 PCI Target Channel Architecture 56
4.2.1 PCI Target Module 56
4.2.2 Px-FIFO and Pr-FIFO 57
4.2.3 QBus Master Module 57
4.2.3.1 QBus Data Parity Generation and Detection 58
4.3 Channel Description 58
4.4 Address Phase 59
4.4.1 Transaction Decoding 59
4.4.2 Address Translation 62
4.4.3 Transaction Codes on the QBus 64
4.4.4 PCI BIOS Memory Allocation 65
4.4.4.1 Block Size and PCI Address Space 65
4.4.4.2 Base Address 65
4.5 Data Phase 66
4.5.1 Endian Mapping 66
4.5.1.1 Write Cycle Mapping for PCI Target Channel. 66
4.5.1.2 Read Cycle Mapping for PCI Target Channel 68
4.5.2 Data Path. 72
4.5.2.1 Posted Writes 72

© 2019 Renesas Electronics Corporation

4.5.2.2 Delayed Writes. 73
4.5.2.3 Single Read Transactions. 74
4.5.2.4 Prefetched Read Transactions 74
4.5.3 Parity Monitoring by PCI Target Module 75
4.6 Reads and PCI Transaction Ordering 75
4.6.1 Transaction Ordering Disable Option 76
4.7 QBus Arbitration and Sampling 76
4.7.1 MC68360 Bus Arbitration 76
4.7.2 MPC860 Bus Arbitration 77
4.7.3 M68040 Bus Arbitration. 78
4.8 Terminations 78
4.8.1 QBus Master Module Terminations 78
4.8.2 MC68360 Cycle Terminations 78
4.8.3 MPC860 Cycle Terminations 79
4.8.4 M68040 Cycle Terminations 79
4.8.5 Terminations driven by the PCI Target Module. 80
4.8.5.1 Target-Disconnect 80
4.8.5.2 Target-Retry. 81
4.8.5.3 Target-Abort 81
4.8.6 Terminations of Posted Writes 82

Chapter 5: The IDMA Channel 83
5.1 Overview 83
5.2 PCI Read Transactions 85
5.2.1 Data Path 86
5.3 PCI Write Transactions 87
5.3.1 Data Path 87
5.4 TC[3:0] Encoding with MPC860 IDMA 88
5.5 IDMA Status Tracking 89
5.6 IDMA Errors, Resets, and Interrupts 89
5.7 IDMA Endian Issues 91

Chapter 6: The DMA Channel. 93
6.1 Overview 93
6.2 DMA Registers 95
6.2.1 Burst Cycles 96
6.2.2 DMA Cycles on QBus 97
6.3 Direct Mode DMA Operation 97
6.3.1 Initiating a Direct Mode Transfer. 97
6.3.2 Terminating a Direct Mode Transfer 98

© 2019 Renesas Electronics Corporation

6.4 Linked List Mode DMA Operation 98
6.4.1 Initiating a Linked List Mode DMA Operation 100
6.4.2 Terminating a Linked List Mode DMA Operation 102

Chapter 7: The Register Channel 103
7.1 Overview 103
7.2 Register Access Fairness 104
7.3 Register Access from the PCI Bus 105
7.4 Register Access from the QBus 107
7.4.1 Examples of QBus Register Accesses 108
7.4.2 PCI Configuration Cycles Generated from the QBus 108
7.4.3 Address Phase of PCI Configuration Cycles 109
7.4.3.1 Data Phase of PCI Configuration Cycles 110
7.4.4 Interrupt Acknowledge Cycle 110
7.5 Register Access Synchronization 111
7.6 Mailbox Registers 112

Chapter 8: The Interrupt Channel 113
8.1 Overview 113
8.2 Hardware-Triggered Interrupts 114
8.3 Software-Triggered Interrupts 115
8.3.1 Interrupt Generation due to PCI Configuration Register Status Bits 118
8.4 Interrupt Acknowledge Cycle 119
8.5 Disabling PCI Interrupts 119

Chapter 9: The EEPROM Channel 121
9.1 Overview 121
9.2 EEPROM Configuration and Plug and Play Compatibility 123
9.3 EEPROM I^2C Protocol 123
9.4 Mapping of EEPROM Bits to QSpan II Registers 124
9.5 Programming the EEPROM from the QBus or PCI Bus 127
9.5.1 Writing to the EEPROM 127
9.5.2 Reading from the EEPROM 128
9.6 EEPROM Access 128
9.7 Vital Product Data Support 128
9.7.1 Reading VPD Data 129
9.7.2 Writing VPD Data 129

Chapter 10: I_2O Messaging Unit 131
10.1 Overview 131
10.2 Inbound Messaging 132
10.3 Outbound Messaging 133
10.4 I_2O Operation 134

© 2019 Renesas Electronics Corporation

10.5 Summary of I_2O Operations 134
10.5.1 Initialization 134
10.5.1.1 Inbound I_2O Message 136
10.5.1.2 I_2O Outbound Message 136
10.6 I_2O Interrupts 137

Chapter 11: PCI Bus Arbiter 139
11.1 Overview 139
11.2 Arbitration Scheme 140
11.3 Bus Parking 142

Chapter 12: CompactPCI Hot Swap Friendly Support 143
12.1 Overview 143
12.2 Hot Swapping with the QSpan II 144
12.3 CompactPCI Hot Swap Card Insertion 145
12.4 CompactPCI Hot Swap Card Extraction 147

Chapter 13: PCI Power Management Event Support 151
13.1 Overview 151
13.2 Power Management Event (PME#) Support 151

Chapter 14: Reset Options 153
14.1 Types of Resets 153
14.1.1 PCI Transactions during QBus Reset 154
14.1.2 IDMA Reset 154
14.1.3 Clocking and Resets 154
14.2 Configuration Options at Reset 155
14.2.1 PCI Bus Master Reset Option 155
14.2.2 QBus Master and Slave Modes 156
14.2.3 EEPROM Loading 156
14.2.4 PCI Register Access Option 156
14.2.5 PCI Bus Arbitration Option 156

Chapter 15: Hardware Implementation Issues 157
15.1 Test Mode Pins 157
15.2 JTAG Support 158
15.3 Decoupling Capacitors 158

Chapter 16: Signals 159
16.1 Terminology 159
16.2 Overview 160
16.3 MC68360 Signals: QUICC 161
16.4 MPC860 Signals: PowerQUICC 165
16.5 M68040 Signals 169

© 2019 Renesas Electronics Corporation

16.6 PCI Bus Signals . . . 172
16.7 Hot Swap Signals . . . 174
16.8 Miscellaneous Signals . . . 175
16.9 JTAG Signals . . . 176

Chapter 17: Signals and DC Characteristics . . . 177
17.1 Terminology . . . 177
17.2 Packaging and Voltage Level Support . . . 178
17.3 Signals and DC Characteristics . . . 178
17.4 Pinout . . . 190

Appendix A: Registers . . . 193
A.1 Overview . . . 193
A.2 Terminology . . . 194
A.3 Register Map . . . 195
A.4 Registers . . . 200

Appendix B: Timing . . . 299
B.1 Overview . . . 299
B.2 Timing Parameters . . . 300
B.3 Wait State Insertion — QBus Slave Module . . . 314
B.4 Timing Diagrams . . . 315
B.4.1 QBus Interface — MC68360 . . . 315
B.4.2 QBus Master Cycles — MC68360 . . . 315
B.4.2.1 QBus Slave Cycles — MC68360 . . . 318
B.4.2.2 QBus IDMA Cycles — MC68360 . . . 322
B.4.3 QBus Interface — MPC860 . . . 330
B.4.3.1 QBus Master Cycles — MPC860 . . . 330
B.4.3.2 QBus Slave Cycle — MPC860 . . . 335
B.4.3.3 QBus IDMA Cycles — MPC860 . . . 341
B.4.4 QBus Interface — M68040 . . . 345
B.4.4.1 QBus Master Cycles — M68040 . . . 346
B.4.4.2 QBus Slave Cycles — M68040 . . . 349
B.4.5 Interrupts and Resets . . . 355
B.4.6 Reset Options . . . 357

Appendix C: Typical Applications . . . 359
C.1 MC68360 Interface . . . 359
C.1.1 Hardware Interface . . . 359
C.1.1.1 Clocking . . . 359
C.1.1.2 Resets . . . 360
C.1.1.3 Memory Controller . . . 361
C.1.1.4 QBus Direct Connects . . . 362

© 2019 Renesas Electronics Corporation

C.1.1.5 Interrupts 362
C.1.1.6 PCI Signals 362
C.1.1.7 EEPROM Interface 362
C.1.1.8 Reset Options 363
C.1.1.9 Unused Inputs Requiring Pull-Ups 363
C.1.1.10 No Connects 363
C.1.1.11 JTAG Signals 363
C.1.1.12 Address Multiplexing for DRAM 364
C.1.2 Software Issues 364
C.1.3 MC68360 Slave Mode Interface 364
C.2 MPC860 Interface 365
C.2.1 Hardware Interface 366
C.2.1.1 Clocking 366
C.2.1.2 Resets 367
C.2.1.3 Memory Controller 368
C.2.1.4 QBus Direct Connects 368
C.2.1.5 Interrupts 369
C.2.1.6 PCI Signals 369
C.2.1.7 EEPROM Interface 369
C.2.1.8 Reset Options 369
C.2.1.9 Unused Inputs Requiring Pull-Ups 370
C.2.1.10 No Connects 370
C.2.1.11 JTAG Signals 370
C.2.1.12 Bused Signals 370
C.2.1.13 Address Multiplexing for DRAM 370
C.2.1.14 Software Issues 371
C.3 M68040 Interface 372
C.3.1 Hardware Interface 373
C.3.1.1 Clocking 373
C.3.1.2 Resets 373
C.3.1.3 Address Decoder 374
C.3.1.4 QBus Direct Connects 374
C.3.1.5 Interrupts 374
C.3.1.6 PCI Signals 375
C.3.1.7 EEPROM Interface 375
C.3.1.8 Reset Options 375
C.3.1.9 Unused Inputs Requiring Pull-Ups 376
C.3.1.10 No Connects 376
C.3.1.11 JTAG Signals 376

© 2019 Renesas Electronics Corporation

Appendix D: Software Initialization 377
D.1 Miscellaneous Control Register Configuration 378
D.2 QBus Slave Channel Initialization. 380
D.3 Register Access from the PCI Bus. 381
D.4 PCI Target Channel Initialization 381
D.5 Error Logging of Posted Transactions. 383
D.6 IDMA/DMA Channel Initialization 384
D.7 Interrupt Initialization 384
D.8 Generation of PCI Configuration and IACK Cycles 385
D.9 EEPROM and VPD Initialization 386
D.10 I_2O Messaging Unit Initialization 386
D.11 PCI Expansion ROM Implementation. 387

Appendix E: Endian Mapping. 389
E.1 Overview 389
E.2 Big-Endian System 390
E.3 Little-Endian System 391
E.4 Endian Mapping Methods 392
E.4.1 Address Invariance 392
E.4.2 Data Invariance 393
E.4.3 Combined Method. 393

Chapter 18: Operating and Storage Conditions 395
18.1 Power Dissipation 395
18.2 Operating Conditions. 396
18.3 Thermal Characteristics 396

Appendix F: Mechanical Information 399
F.1 Mechanical Information. 399
F.1.1 256 PBGA — 17 mm 399
F.1.1.1 PBGA Notes — 17 mm 400
F.1.2 256 PBGA — 27 mm 401
F.1.2.1 PBGA Notes — 27 mm 402

Appendix G: Ordering Information 405
G.1 Ordering Information. 405
G.2 Part Numbering Information 406

Glossary 409

Index 411

© 2019 Renesas Electronics Corporation

List of Figures

Figure 1: QSpan II Bridging PCI and Processor Buses 24
Figure 2: QSpan II Functional Diagram 30
Figure 3: QBus Slave Channel — Functional Diagram 34
Figure 4: Address Generator for QBus Slave Channel Transfers 41
Figure 5: PCI Target Channel — Functional Diagram 56
Figure 6: Address Generator for PCI Target Channel Transfers 63
Figure 7: IDMA Channel — Functional Diagram 84
Figure 8: DMA Channel — Functional Diagram 94
Figure 9: Linked List DMA Operation 99
Figure 10: Register Channel — Functional Diagram 104
Figure 11: QSpan II Control and Status Registers 105
Figure 12: QCSR Access from the QBus 107
Figure 13: Example of a Register-Access Synchronization Problem 111
Figure 14: Interrupt Channel — Functional Diagram 114
Figure 15: EEPROM Channel — Functional Diagram 122
Figure 16: Sequential Read from EEPROM 123
Figure 17: I_2O Messaging Unit — Functional Diagram 132
Figure 18: I_2O Implementation 133
Figure 19: PCI Bus Arbiter — Functional Diagram 140
Figure 20: PCI Bus Arbiter — Arbitration Scheme 141
Figure 21: CompactPCI Hot Swap — Functional Diagram 144
Figure 22: Hot Swap Card Insertion 147
Figure 23: Hot Swap Card Extraction 149
Figure 24: Reference Voltages for AC Timing Specification 300
Figure 25: QCLK Input Timing — MC68360 CLKO1 315
Figure 26: QBus Arbitration — MC68360 315
Figure 27: Single Read — QSpan II as MC68360 Master 316
Figure 28: Single Write — QSpan II as MC68360 Master 317
Figure 29: Delayed Single Read — QSpan II as MC68360 Slave 318
Figure 30: Single Write — QSpan II as MC68360 Slave 319

© 2019 Renesas Electronics Corporation

Figure 31: Register Read — QSpan II as MC68360 Slave 320
Figure 32: Register Write — QSpan II as MC68360 Slave 321
Figure 33: MC68360 DREQ_ Timing 322
Figure 34: MC68360 IDMA Read — Single Address, Standard Terminations 323
Figure 35: MC68360 IDMA Write — Single Address, Standard Terminations 324
Figure 36: MC68360 IDMA Read — Single Address, Fast Termination 325
Figure 37: MC68360 IDMA Write — Single Address, Fast Termination 325
Figure 38: MC68360 IDMA Read — Dual Address, Standard Termination 326
Figure 39: MC68360 IDMA Write — Dual Address, Standard Termination 327
Figure 40: MC68360 IDMA Read — Dual Address, Fast Termination 328
Figure 41: MC68360 IDMA Read — Dual Address, Fast Termination 329
Figure 42: QBus Arbitration — MPC860 330
Figure 43: Single Read — QSpan II as MPC860 Master 331
Figure 44: Single Write — QSpan II as MPC860 Master 332
Figure 45: Burst Read — QSpan II as MPC860 Master 333
Figure 46: Aligned Burst Write — QSpan II as MPC860 Master 334
Figure 47: Single Read — QSpan II as MPC860 Slave. 335
Figure 48: Single Write — QSpan II as MPC860 Slave 336
Figure 49: Burst Read — QSpan II as MPC860 Slave 337
Figure 50: Burst Write — QSpan II as MPC860 Slave 338
Figure 51: Register Read — QSpan II as MPC860 Slave 339
Figure 52: Register Write — QSpan II as MPC860 Slave. 340
Figure 53: MPC860 DREQ_ Timing 341
Figure 54: MPC860 IDMA Read — Single Address. 342
Figure 55: MPC860 IDMA Write — Single Address 343
Figure 56: MPC860 IDMA Read — Dual Address 344
Figure 57: MPC860 IDMA Write — Dual Address 345
Figure 58: QCLK Input Timing — M68040 BCLK 345
Figure 59: QBus Arbitration — M68040. 346
Figure 60: Single Read — QSpan II as M68040 Master 347
Figure 61: Single Write — QSpan II as M68040 Master 348
Figure 62: Single Read — QSpan II as M68040 Slave 349
Figure 63: Single Write — QSpan II as M68040 Slave. 350
Figure 64: Delayed Burst Read — QSpan II as M68040 Slave. 351
Figure 65: Posted Burst Write — QSpan II as M68040 Slave 352
Figure 66: Register Reads — QSpan II as M68040 Slave. 353
Figure 67: Register Write — QSpan II as M68040 Slave 354
Figure 68: Reset from PCI Interface — RST# related to RESETO_. 355
Figure 69: Software Reset 355

© 2019 Renesas Electronics Corporation

Figure 70: INT# Interrupt to QINT_ Interrupt 355
Figure 71: PERR# Interrupt. 355
Figure 72: SERR# Interrupt. 356
Figure 73: QINT_ Interrupt to INT# Interrupt 356
Figure 74: Reset Options 357
Figure 75: MC68360 Interface 360
Figure 76: MPC860 Interface 365
Figure 77: MPC860/QSpan II Clocking Scheme Example 366
Figure 78: Example Code for Executing an MPC860 Delay Loop 367
Figure 79: M68040 Interface 372
Figure 80: Big-Endian System 390
Figure 81: Little-Endian System 391
Figure 82: Address Invariant Mapping 392
Figure 83: Data Invariant Mapping 393
Figure 84: 256 PBGA, 17 mm — Top and Side Views 400
Figure 85: 256 PBGA, 17 mm — Bottom View 401
Figure 86: 256 PBGA, 27 mm — Top and Side Views 402
Figure 87: 256 PBGA, 27 mm — Bottom View 403

© 2019 Renesas Electronics Corporation

© 2019 Renesas Electronics Corporation

List of Tables

Table 1: QSpan II New Features and Functional Enhancements 26
Table 2: Reset Options for QBus Slave Modes 35
Table 3: Address Fields for QBus Slave Image 38
Table 4: Control Fields for QBus Slave Image 38
Table 5: Translation of QBus Address to PCI Address 42
Table 6: Command Type Encoding for Transfer Type 43
Table 7: Translation from QBus Transaction to PCI Transaction Type 44
Table 8: Little-Endian QBus Slave Channel Cycle Mapping 45
Table 9: Big-Endian QBus Slave Channel Cycle Mapping 46
Table 10: Translation of Cycle Termination from PCI Bus to QBus. 51
Table 11: MC68360 Cycle Terminations of QBus Slave Module 52
Table 12: MPC860 Cycle Terminations of QBus Slave Module. 52
Table 13: M68040 Cycle Terminations of QBus Slave Module 52
Table 14: QBus Slave Channel Error Responses 53
Table 15: Reset Options for QBus Master and Slave Modes. 57
Table 16: Address Fields for PCI Target Image 59
Table 17: Control Fields for PCI Target Image 60
Table 18: Translation of PCI Bus Address to QBus Address 64
Table 19: Little-Endian PCI Target Write Cycle Mapping — 32-Bit QBus Port 67
Table 20: Big-Endian PCI Target Write Cycle Mapping — 32-Bit QBus Port. 67
Table 21: Little-Endian PCI Target Read Cycle Mapping — 32-Bit QBus Port. 69
Table 22: Big-Endian PCI Target Read Cycle Mapping — 32-Bit QBus Port 69
Table 23: Little-Endian PCI Target Read Cycle Mapping — 16-Bit QBus Port. 70
Table 24: Big-Endian PCI Target Read Cycle Mapping — 16-Bit QBus Port 70
Table 25: Little-Endian PCI Target Read Cycle Mapping — 8-Bit QBus Port. 71
Table 26: Big-Endian PCI Target Read Cycle Mapping — 8-Bit QBus Port 71
Table 28: MPC860 Cycle Terminations of QBus Master Module. 79
Table 29: M68040 Cycle Terminations of QBus Master Module 79
Table 27: MC68360 Cycle Terminations of QBus Master Module. 79
Table 30: Translation of Cycle Termination from QBus to PCI Bus. 82

© 2019 Renesas Electronics Corporation

Table 32: IDMA Interrupt Source, Enabling, Mapping, Status and Clear bits. 90
Table 31: QSpan II's Response to IDMA Errors 90
Table 34: 16-Bit Big-Endian IDMA Cycle Mapping 92
Table 35: 32-Bit Little-Endian IDMA Cycle Mapping 92
Table 36: 32-Bit Big-Endian IDMA Cycle Mapping 92
Table 33: 16-Bit Little Endian IDMA Cycle Mapping. 92
Table 37: PCI Memory Cycle Access to bits 15-08 of the PCI_CLASS register 106
Table 38: Big-Endian QBus Access to bits 15-08 of the PCI_CLASS register 108
Table 39: Little-Endian QBus Access to bits 15–08 of the PCI_CLASS register 108
Table 40: PCI AD[31:16] lines asserted as a function of DEV_NUM field 110
Table 41: Mapping of Hardware-Initiated Interrupts 115
Table 42: Interrupt Source, Enabling, Mapping, Status and Clear bits 116
Table 43: Software Interrupt Mapping, Status and Source bits 118
Table 44: Destination of EEPROM Bits Read 125
Table 45: Insertion Sequence 146
Table 46: Extraction Sequence 148
Table 47: Hardware Reset Mechanisms 153
Table 48: Reset Options for QBus Master and Slave Modes 156
Table 49: Test Mode Operation 157
Table 50: QBus Signal Names Compared to Motorola Signals 160
Table 51: MC68360/MPC860 Encoding for the SIZ[1:0] Signal. 169
Table 52: M68040 Encoding for the SIZ[1:0] Signal. 172
Table 53: Non-PCI DC Electrical Characteristics (V_{DD} ±5%) 178
Table 54: 3.3V PCI I/O Signaling AC/DC Characteristics (V_{DD} ±5%). 179
Table 55: 5V PCI I/O Signaling AC/DC Electrical Characteristics 180
Table 56: Pin List for QSpan II Signals 181
Table 57: PCI Bus Address/Data Pins 185
Table 58: QBus Address Pins 186
Table 59: QBus Data Pins. 187
Table 60: External Request and Grant Pins 187
Table 61: Pin Assignments for Power (V_{DD}) 188
Table 62: Voltage Required to be Applied to VH 188
Table 63: Pin Assignments for Ground (V_{SS}) 189
Table 64: No-connect Pin Assignments 189
Table 65: Pinout of 17x17 mm Package. 190
Table 66: Pinout of 27x27 mm Package. 191
Table 67: Register Map 195
Table 68: I2O Memory Map — Lower 4K 199
Table 69: PCI Configuration Space ID Register 200

© 2019 Renesas Electronics Corporation

Table 70: PCI Configuration Space Control and Status Register 201
Table 71: PCI Configuration Class Register 204
Table 72: PCI Configuration Miscellaneous 0 Register. 205
Table 73: PCI Configuration Base Address for Memory Register 206
Table 74: I20 Base Address Register 207
Table 75: PCI Configuration Base Address for Target 0 Register. 208
Table 76: PCI Address Lines Compared as a Function of Block Size. 209
Table 77: PCI Configuration Base Address for Target 1 Register. 210
Table 78: PCI Address Lines Compared as a Function of Block Size. 211
Table 79: PCI Configuration Subsystem ID Register 212
Table 80: PCI Configuration Expansion ROM Base Address Register. 213
Table 81: Writable BA bits as a function of Block Size 214
Table 82: PCI Capabilities Pointer Register 215
Table 83: PCI Configuration Miscellaneous 1 Register. 216
Table 84: PCI Power Management Capabilities Register 217
Table 85: PCI Power Management Control and Status Register 218
Table 86: CompactPCI Hot Swap Register 219
Table 87: PCI Vital Product Data Register 220
Table 88: PCI VPD Data Register 221
Table 89: PCI Bus Target Image 0 Control Register 222
Table 90: PCI Bus Target Image 0 Address Register 224
Table 91: PCI Address Lines Compared as a Function of Block Size. 225
Table 92: PCI Bus Target Image 1 Control Register 226
Table 93: PCI Bus Target Image 1 Address Register 228
Table 94: PCI Address Lines Compared as a Function of Block Size. 229
Table 95: PCI Bus Expansion ROM Control Register. 230
Table 96: PCI Address Lines Compared as a Function of Block Size. 231
Table 97: PCI Bus Error Log Control and Status Register 232
Table 98: PCI Bus Address Error Log Register. 234
Table 99: PCI Bus Data Error Log Register 235
Table 100: I2O Control and Status Register 236
Table 101: I2O Inbound Free_List Top Pointer Register 238
Table 102: I2O Inbound Free_List Bottom Pointer Register. 239
Table 103: I2O Inbound Post_List Top Pointer Register. 240
Table 104: I2O Inbound Post_List Bottom Pointer Register 241
Table 105: I2O Outbound Free_List Top Pointer Register 242
Table 106: I2O Outbound Free_List Bottom Pointer Register 243
Table 107: I2O Outbound Post_List Top Pointer Register 244
Table 108: I2O Outbound Post_List Bottom Pointer Register 245

© 2019 Renesas Electronics Corporation

Table 109: IDMA Control and Status Register 246
Table 110: IDMA/DMA PCI Address Register 249
Table 111: IDMA/DMA Transfer Count Register 250
Table 112: DMA QBus Address Register 251
Table 113: DMA Control and Status Register 252
Table 114: DMA Command Packet Pointer Register. 255
Table 115: Configuration Address Register 256
Table 116: PCI AD[31:16] lines asserted as a function of DEV_NUM field 257
Table 117: Configuration Data Register. 258
Table 118: IACK Cycle Generator Register. 259
Table 119: Interrupt Status Register 260
Table 120: Interrupt Control Register. 263
Table 121: Interrupt Direction Register 266
Table 122: Interrupt Control Register 2 269
Table 123: Mailbox 0 Register 270
Table 124: Mailbox 1 Register 271
Table 125: Mailbox 2 Register 272
Table 126: Mailbox 3 Register 273
Table 127: Miscellaneous Control and Status Register 274
Table 128: Master/Slave Mode — MSTSLV field. 276
Table 129: EEPROM Control and Status Register. 277
Table 130: Miscellaneous Control 2 Register. 278
Table 131: PCI Bus Arbiter Control Register. 281
Table 132: Parked PCI Master 282
Table 133: QBus Slave Image 0 Control Register 283
Table 134: QSpan II Response to a Single-Read Cycle Access. 284
Table 135: QSpan II Response to a Burst-Read Cycle Access. 284
Table 136: QSpan II Response to a Single-Write Cycle Access 284
Table 137: QSpan II Response to a Burst-Write Cycle Access 284
Table 138: QBus Slave Image 0 Address Translation Register 285
Table 139: Address Lines Translated as a Function of Block Size 286
Table 140: QBus Slave Image 1 Control Register 287
Table 141: QSpan II Response to a Single-Read Cycle Access. 288
Table 142: QSpan II Response to a Burst-Read Cycle Access. 288
Table 143: QSpan II Response to a Single-Write Cycle Access 288
Table 144: QSpan II Response to a Burst-Write Cycle Access 288
Table 145: QBus Slave Image 1 Address Translation Register 289
Table 146: QBus Address Lines Compared as a function of Block Size 290
Table 147: QBus Error Log Control and Status Register. 291

© 2019 Renesas Electronics Corporation

Table 148: QBus Address Error Log 292
Table 149: QBus Data Error Log 293
Table 150: I20 Outbound Post_List Interrupt Status Register 294
Table 151: I20 Outbound Post_List Interrupt Mask Register 295
Table 152: I2O Inbound Queue Register 296
Table 153: I2O Outbound Queue Register. 297
Table 154: Timing Parameters for MC68360 Interface 301
Table 155: Timing Parameters for MPC860 Interface. 306
Table 156: Timing Parameters for M68040 Interface 310
Table 157: Timing Parameters for Interrupts and Resets. 313
Table 158: Timing Parameters for Reset Options 313
Table 159: Direction of QBus Signals During MC68360 IDMA Cycles 322
Table 160: Direction of QBus Signals During MPC860 IDMA Cycles 341
Table 161: Summary of the QSpan II’s Miscellaneous Control Register 378
Table 162: Summary of the QSpan II’s Miscellaneous Control Register 2. 379
Table 163: PCI Arbiter Control Register Summary. 380
Table 164: QBus Slave Channel Programming Summary. 380
Table 165: Register Access 381
Table 166: PCI Target Image Programming Summary 381
Table 167: QBus Error Logging Programming Summary. 383
Table 168: PCI Bus Error Logging Programming Summary. 383
Table 169: IDMA/DMA Channel Programming Summary. 384
Table 170: PCI Configuration and IACK Cycle Programming Summary. 385
Table 171: PCI Expansion ROM programming. 387
Table 172: Power Dissipation 395
Table 173: 3.3 Volt Absolute Maximum Ratings 396
Table 174: 3.3 Volt Recommended Operating Conditions 396
Table 175: Junction to Ambient Characteristics 397
Table 176: 256 PBGA — 17 mm Packaging Features. 399
Table 177: 256 PBGA — 27 mm Packaging Features. 401
Table 178: Ordering Information 405

© 2019 Renesas Electronics Corporation

© 2019 Renesas Electronics Corporation

Chapter 1: General Information

This chapter describes the main functions and features of the QSpan II. It also discusses general document elements and technical support information. The following topics are discussed:

- “What is the QSpan II” on page 24
- “Document Conventions” on page 27
- “Motorola MPC860 (PowerQUICC) User’s Manual” on page 28
- “Related Documentation” on page 28

© 2019 Renesas Electronics Corporation

1.1 What is the QSpan II

The QSpan II™ chip is a member of IDT's growing family of PCI bus-bridging devices. QSpan II enables board designers to bring PCI-based embedded products to market faster, for less cost, and with high performance.

Developed as part of an ongoing strategic relationship with Motorola®, QSpan II is designed to gluelessly bridge the MC68360 (QUICC™), the MPC860 (PowerQUICC™), other MPCxxx devices, and the M68040/M68060 to PCI (see Figure 1). With additional glue logic, QSpan II can also be connected to lower-end communications controllers and processors, such as the MC68302 and MC68030.

Figure 1: QSpan II Bridging PCI and Processor Buses

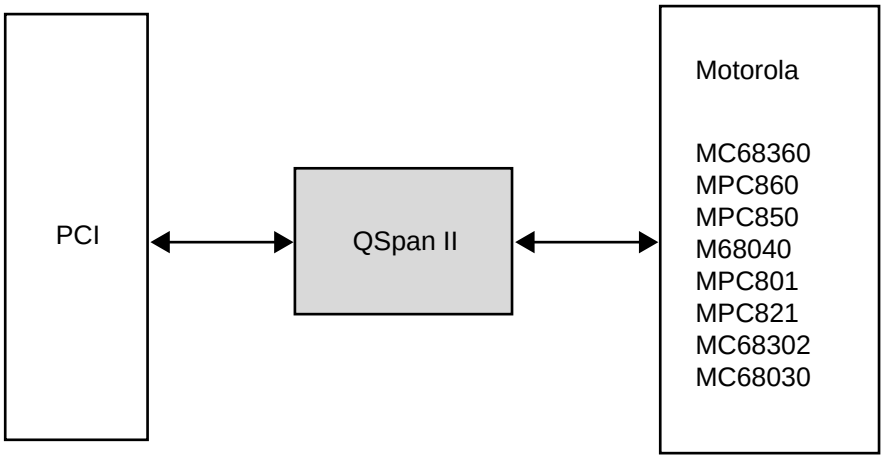

© 2019 Renesas Electronics Corporation

1.1.1 QSpan II Features

QSpan II has the following features:

- A direct-connect interface to the PCI bus for Motorola's MC68360 and MPC860 communications controllers, and the M68040 Host processor.
- QSpan compatible
- Support for up to 50 MHz MPC8xx bus frequencies (industrial temperature range: -40°C to 85°C)
- Available in two, low thermal resistance packages: 17 mm x 17 mm PBGA; and 27 mm x 27 mm PBGA. Both packages have 3.3V power requirements and are 5V tolerant
- 32-bit PCI interface
- Integrated PCI bus arbiter
- Flexible, high performance DMA engine which operates in both Direct and Scatter/Gather mode
- Five FIFO buffers for multiple transactions in both directions
- Accepts and generates burst reads and writes on the PCI bus
- MPC860 UPM-compliant burst reads and writes as processor bus master
- Separate channel supports MC68360 and MPC860 IDMA
- Flexible address space mapping and translation between the PCI and processor buses
- Programmable endian-byte ordering
- Serial EEPROM interface for Plug and Play compatibility
- Support for PCI and processor bus operation at different clock frequencies
- IEEE 1149.1 JTAG boundary scan support
- CompactPCI Hot Swap Friendly support
- Support for Vital Product Data and Power Management
- I_2O Messaging Unit
- Mailbox registers for user-designed message passing

© 2019 Renesas Electronics Corporation

1.1.2 QSpan II verses QSpan

The following table summarizes the main QSpan II features that were unavailable in the QSpan device.

Table 1: QSpan II New Features and Functional Enhancements

Description	See
Features	
DMA Channel	"The DMA Channel" on page 93
Vital Product Data (*PCI Local Bus Specification 2.2* compatible)	"Vital Product Data Support" on page 128
I_2O Messaging Unit	"I2O Messaging Unit" on page 131
Integrated PCI Bus Arbiter	"PCI Bus Arbiter" on page 139
CompactPCI Hot Swap Friendly	"CompactPCI Hot Swap Friendly Support" on page 143
PCI Bus Power Management (*PCI Bus Power Management Interface Specification 1.1* compatible)	"PCI Power Management Event Support" on page 151
Functional Enhancements	
Support for QBus Data Parity Generation and Detection	"QBus Data Parity Generation and Detection" on page 35
Performance Improvement for QBus Posted Write Transfers	"Writes" on page 46
Support for prefetching through the QBus Slave Channel	"Prefetched Reads" on page 48
Option to Keep Bus Busy (BB_) asserted on Back-to-Back Transfers on the QBus during PCI target cycles	"Bursting on the QBus" on page 73
Option to use a different prefetch count in the PCI Target Channel based on the Target Image	"Prefetched Read Transactions" on page 74
MPC860 UPM-compliant burst reads and writes as processor bus master	"Burst Cycles" on page 96

© 2019 Renesas Electronics Corporation

1.2 Document Conventions

1.2.1 Signals

Signals are either active high or active low. Active low signals are defined as true (asserted) when they are at a logic low. Similarly, active high signals are defined as true at a logic high. Signals are considered asserted when active and negated when inactive, irrespective of voltage levels. For voltage levels, the use of 0 indicates a low voltage while a 1 indicates a high voltage.

The following signal conventions are used:

- SIGNAL#: Active low signals on the PCI bus interface.
- SIGNAL_: Active low signals on the Host processor bus interface.

1.2.2 Bit Ordering

This document adopts the convention that the most significant bit is always the largest number (also referred to as *Little-Endian* bit ordering). For example, the PCI address/data bus consists of AD[31:0], where AD[31] is the most significant bit and AD[0] is the least-significant bit of the field.

1.2.3 Numeric Conventions

The following numeric conventions are used:

- Hexadecimal numbers are denoted by the prefix *0x*. For example, 0x004.
- Binary numbers are denoted by the suffix *b*. For example, 010b.

1.2.4 Topographic Conventions

The following typographic conventions are used:

- *Italic* type is used for the following purposes:
  - **Book titles**: For example, *PCI Local Bus Specification (Revision 2.2).*
  - **Important terms**: For example, when a device is granted access to the PCI bus it is called the bus *master*.
  - **Undefined values**: For example, the device supports two or three ports depending on the setting of the PCI_D*x* register.
- `Courier` type is used to represent a file name or text that appears on a computer display. For example, “run `loadext.exe` by typing it at a command prompt.”

© 2019 Renesas Electronics Corporation

1.2.5 Symbols

This symbol directs the reader to useful information or suggestions.

This symbol alerts the reader to procedures or operating levels which may result in misuse or damage to the product.

This symbol alerts the reader to an initialization process that must be performed as a minimum to access the required channel or interface.

1.2.6 Document Status

IDT technical documentation is classified as either Advance, Preliminary, or Final. These classifications are briefly explained:

- **Advance**: The Advance manual contains information that is subject to change. The Advance manual exists until device prototypes are available. This type of manual can be downloaded from our website.
- **Preliminary**: The Preliminary manual contains information about a device that is near production-ready, and is revised on an “as needed” basis. The Preliminary manual exists until the device is released to production. This type of manual can be downloaded from our website.
- **Formal**: The Formal manual contains information about a customer-ready device. This type of manual can be downloaded from our website.

1.3 Related Documentation

Before you read this manual, you should be familiar with the following:

- *PCI Local Bus Specification (Revision 2.2)*
- *CompactPCI Hot Swap Specification (Revision 1.0)*
- *CompactPCI Specification (Revision 2.1)*
- *PCI Bus Power Management Interface Specification, (Revision 1.1)*
- *Intelligent I/O Architecture Specification (Revision 1.5)*
- *QSpan II/MPC860 CompactPCI Evaluation Board Manual (6091862_MA001)*
- *QSpan II Software Development Kit Manual (6091862_MA002)*
- *Motorola M68040 User’s Manual*
- *Motorola MC68360 User’s Manual*
- *Motorola MPC860 (PowerQUICC) User’s Manual*

© 2019 Renesas Electronics Corporation

Chapter 2: Functional Overview

This chapter briefly discusses the main functional components (also referred to as channels) of the QSpan II. Please see the following chapters for a detailed explanation of each component:

- Chapter 3: “The QBus Slave Channel” on page 33
- Chapter 4: “The PCI Target Channel” on page 55
- Chapter 5: “The IDMA Channel” on page 83
- Chapter 6: “The DMA Channel” on page 93
- Chapter 7: “The Register Channel” on page 103
- Chapter 8: “The Interrupt Channel” on page 113
- Chapter 9: “The EEPROM Channel” on page 121
- Chapter 10: “I2O Messaging Unit” on page 131
- Chapter 11: “PCI Bus Arbiter” on page 139
- Chapter 12: “CompactPCI Hot Swap Friendly Support” on page 143
- Chapter 13: “PCI Power Management Event Support” on page 151
- Chapter 14: “Reset Options” on page 153
- Chapter 15: “Hardware Implementation Issues” on page 157

2.1 Overview

QSpan II has two interfaces: a PCI Bus Interface and a QBus Interface (see Figure 2). The PCI Interface connects the QSpan II to the PCI bus. The QBus Interface connects the QSpan II to the processor bus. Both interfaces support master and slave transactions. The QBus Interface can be directly connected to an MC68360 (QUICC) bus, an MPC860 (PowerQUICC) bus, or an M68040 bus. The QBus Interface can also be connected to other buses with glue logic.

Each interface has two functional modules: a Master Module and a Slave/Target Module. These modules are connected to QSpan II’s functional channels.

© 2019 Renesas Electronics Corporation

Figure 2: QSpan II Functional Diagram

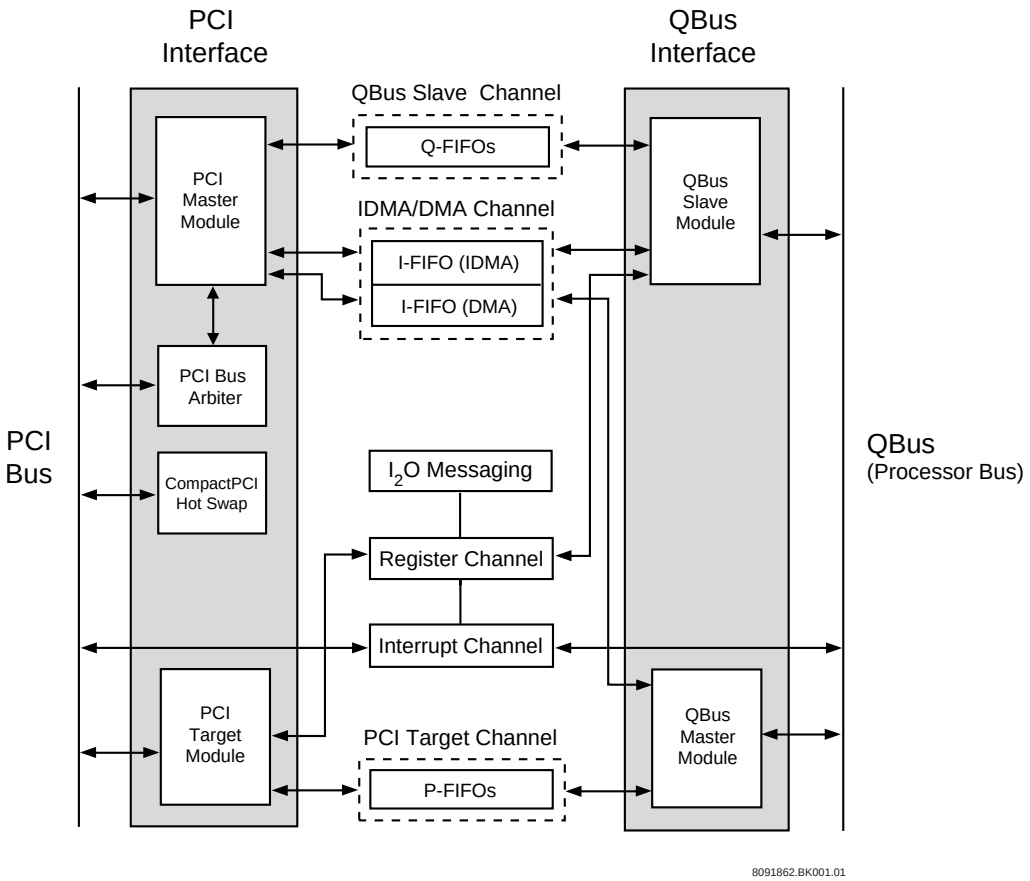

2.2 The QBus Slave Channel

The QBus Slave Channel transfers data between the QBus and the PCI bus (see Figure 2). It supports posted writes, prefetched reads, and delayed single reads and writes. Write transactions from the QBus to the PCI bus can be posted or delayed. Posted writes are queued in the Qx-FIFO with immediate data acknowledgment on the QBus. QSpan II then completes the write on the PCI bus. For delayed reads, the data is prefetched on the PCI bus and stored in the Qr-FIFO. Subsequent reads retrieve the data from the Qr-FIFO. Delayed transactions — both reads and writes — require data acknowledgment on the PCI bus before data acknowledgment is provided on the QBus.

PCI Memory and I/O spaces are accessible through two Slave images associated with the QBus Slave Channel. Configuration space is accessible through the CON_DATA register (see Table 117 on page 258). The QBus Slave images are selected using a pair of chip-select signals on the QSpan II (for information, see Chapter 3: “The QBus Slave Channel” on page 33).

© 2019 Renesas Electronics Corporation

2.3 The PCI Target Channel

The PCI Target Channel transfers data between the PCI bus and the QBus (see Figure 2). It supports posted writes — to ensure zero-wait state bursting — prefetched reads, and delayed single reads and writes. The 256-byte Px-FIFO supports the queuing of long PCI burst writes.

Delayed reads and writes must complete on the QBus before data acknowledgment occurs on the PCI bus. Reads are executed as delayed transactions, but the QSpan II can be configured to prefetch read data. Prefetched reads are queued in a 256-byte Pr-FIFO.

QSpan II provides two programmable Target images on the PCI bus. These images can be mapped anywhere in Memory or I/O space (for information, see Chapter 4: “The PCI Target Channel” on page 55).

2.4 The IDMA Channel

QSpan II can operate as an IDMA peripheral for data transfer between the QBus and the PCI bus (see Figure 2). For transfers going to or from PCI, software can perform bulk data movement using the QSpan II’s IDMA Channel. The IDMA Channel supports single- and dual-address cycles, and fast-termination. A separate set of IDMA handshake signals are provided on the QBus. The IDMA Channel can be used by external QBus masters to read data from or write data to a PCI target in one direction at a time. The IDMA Channel contains a 256-byte I-FIFO and a set of IDMA registers (for information, see Chapter 5: “The IDMA Channel” on page 83).

2.5 The DMA Channel

QSpan II has a DMA Channel for high performance data transfer between the QBus and the PCI bus (see Figure 2). The DMA controller uses the existing IDMA registers — as well as a few additional registers — and shares the 256-byte I-FIFO with the IDMA Channel. Because of the shared FIFO, the QSpan II cannot use its IDMA and DMA Channels at the same time.

The DMA Channel operates in two modes: Direct Mode and Linked List Mode. In Direct Mode, the DMA registers are programmed directly by an external master. In Linked List Mode, the DMA registers are loaded from PCI bus memory or QBus memory by the QSpan II (for information, see Chapter 6: “The DMA Channel” on page 93).

2.6 The Register Channel

QSpan II provides 4 Kbytes of Control and Status Registers (QCSRs) to program PCI settings, as well as the QSpan II’s device specific parameters (see Figure 2). QCSR space is accessible from the PCI bus and the QBus.

An internal arbitration mechanism grants access to the QCSRs. The access mechanisms for the QCSRs, including the arbitration protocol, differ depending on whether the registers are accessed from the PCI bus or the QBus.

© 2019 Renesas Electronics Corporation

PCI Configuration cycles can be generated from the QBus by accessing QSpan II registers. The cycles proceed as delayed transfers (for information, see Chapter 7: “The Register Channel” on page 103).

2.7 The Interrupt Channel

QSpan II can generate interrupts based on hardware or software events (see Figure 2). Two bidirectional interrupt pins are provided: one on the PCI Interface; the other on the QBus Interface. Interrupt registers track the status of errors. They also allow users to enable, clear, and map errors. Interrupts can be generated using one of the four available software interrupt sources (for information, see Chapter 8: “The Interrupt Channel” on page 113).

QSpan II also contains four mailbox registers which can be used for message passing (for information, see “Mailbox Registers” on page 112). These mailbox registers can generate an interrupt when data is written to them.

2.8 The EEPROM Channel

Some of QSpan II’s registers can be programmed by data in an EEPROM at system reset. This allows board designers to set identifiers for their cards on the PCI bus at reset. The identifiers enable the PCI Bus Expansion ROM Control Register (PBROM_CTL) and set various address and image parameters. If the QSpan II is configured with an EEPROM, the QSpan II can boot-up as a Plug and Play compatible device; local processor initialization is also possible.

QSpan II supports reads from and writes to the EEPROM. The EEPROM device is not included with the QSpan II (for more information, see Chapter 9: “The EEPROM Channel” on page 121).

© 2019 Renesas Electronics Corporation

Chapter 3: The QBus Slave Channel

This chapter describes the QSpan II's QBus Slave Channel. The following topics are discussed:

- "QBus Slave Channel Architecture" on page 34
- "Channel Description" on page 36
- "Address Phase" on page 37
- "Data Phase" on page 44
- "Termination Phase" on page 51
- "PCI Master Retry Counter" on page 54

3.1 Overview

The QBus direct-connects to an MC68360 (QUICC) bus, an MPC860 (PowerQUICC) bus, or an M68040 bus (see Figure 3). The QBus can also be direct-connected to a combination of buses, such as an MC68360 bus and an MPC860 bus. A QBus master uses the QBus Slave Channel or IDMA/DMA Channel to access a PCI target.

© 2019 Renesas Electronics Corporation

Figure 3: QBus Slave Channel — Functional Diagram

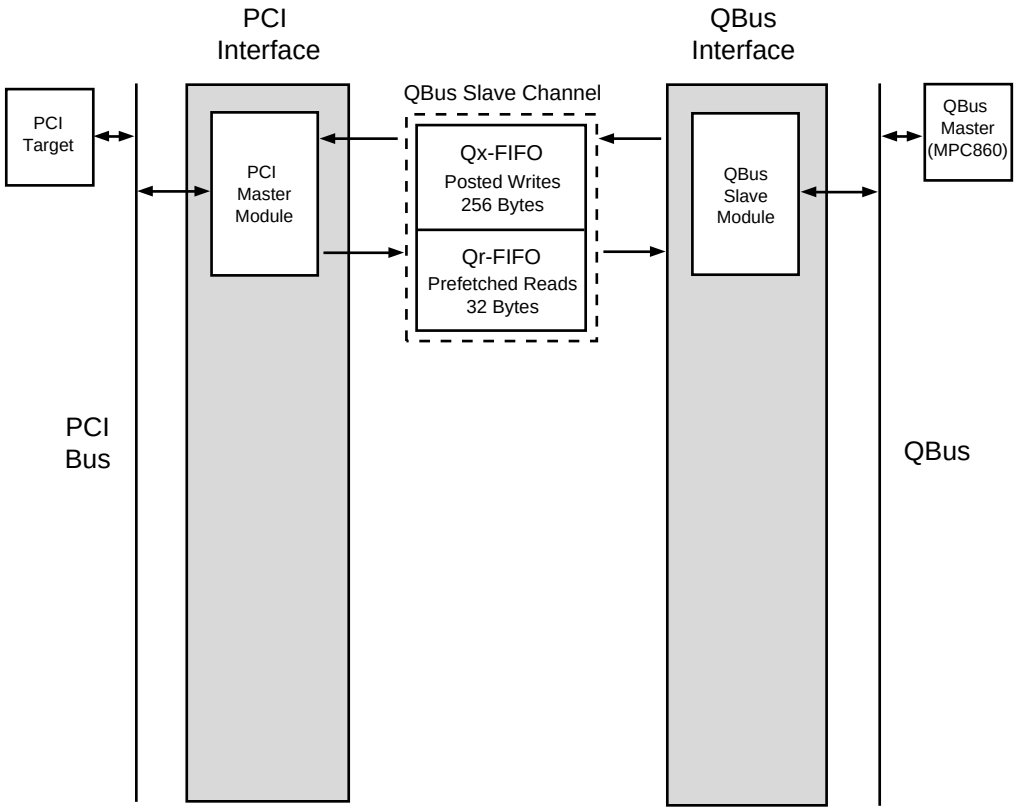

3.2 QBus Slave Channel Architecture

Figure 3 shows the QBus Slave Channel in relation to the QBus and the PCI bus. The QBus is shown with an MPC860 processor; the PCI bus is shown with a single PCI device. The arrows represent data flow. The QBus Slave Channel has the following components:

- QBus Slave Module
- Qx-FIFO
- Qr-FIFO
- PCI Master Module

The QBus Slave Module and PCI Master Module are shared between the QBus Slave Channel and the IDMA/DMA Channel. These components are discussed in the following sections.

© 2019 Renesas Electronics Corporation

3.2.1 QBus Slave Module

The QBus Slave Module is a non-multiplexed 32-bit address, 32-bit data interface. The QBus Slave Module accepts MC68360 cycles, and either MPC860 or M68040 cycles. The QBus Slave Module's mode is set by the SIZ[1] signal at reset. This reset option is summarized in Table 2 (for more information, see Chapter 14: "Reset Options" on page 153). The MSTSLV[1:0] field in the Miscellaneous and Control Status register (MISC_CTL) indicates the slave (and master) mode of the QBus (see Table 127 on page 274). The connections required for interfacing the QSpan II to an MC68360, MPC860, and/or M68040 are described in Appendix C: "Typical Applications" on page 359.

Table 2: Reset Options for QBus Slave Modes

Reset sampling of SIZ[1]	Slave Mode
0	MC68360 and M68040
1	MC68360 and MPC860

3.2.1.1 QBus Data Parity Generation and Detection

The QBus Slave Module (QSM) supports the generation and detection of QBus data parity. The use of QBus data parity is optional. Data parity is valid on the same clock cycle as the QBus data. QSpan II supports Odd and Even parity, and is controlled by QBUS_PAR in the MISC_CTL2 register (see Table 130 on page 278). Even parity is the default setting, which is the same as the PCI bus. The detection of a QBus data parity error does not affect the operation of the QSpan II. The PCI bus parity generation and detection is independent of the QBus data parity generation and detection.

Four pins are used for the QBus Data Parity signals: DP[3:0]. When parity is set to Even, the number of 1s on the QBus Data lines (D[7:0]) and DP[0] equal an even number. Similarly, for Odd parity, the number of 1s on D[7:0] and DP[0] equal an odd number. The following list shows which data parity signals DP[3:0] are used for which data lines:

- DP[0] contains the parity for data lines D[7:0]
- DP[1] contains the parity for data lines D[15:8]
- DP[2] contains the parity for data lines D[23:16]
- DP[3] contains the parity for data lines D[31:24]

The QBus Slave Module generates the data parity when it completes a slave read cycle. If it detects a parity error during a slave write cycle, it sets the QBus Data Parity Error Status bit (QDPE_S) in the Interrupt Status (INT_STAT) register (see Table 119 on page 260). QSpan II can generate an external interrupt (INT# or QINT_) depending on the setting of QBus Data Parity Error Interrupt Enable (QDPE_EN) bit and QBus Data Parity Error Interrupt Direction (QDPE_DIR) bit in INT_EN and INT_DIR registers, respectively. Writing a 1 to the QDPE_S bit negates the interrupt and clears the status bit.

© 2019 Renesas Electronics Corporation

When the QBus Slave Module detects a parity error it sets the QDPE_S bit but continues the transfer as if there were no parity error. For example, if a write is directed to the QSpan II with a data parity error, the QBus Slave Module terminates the cycle normally and passes it onto the QSpan II's PCI interface. QSpan II's PCI master generates the write cycle with the correct parity for the data on the PCI bus.

QSpan II only checks data parity on valid bytes of data. If a single byte transfer is completed on the QBus, only the valid byte on the data bus is checked (for example, D[31:24]).

3.2.2 Qx-FIFO and Qr-FIFO

The Qx-FIFO is a 256-byte buffer for posted writes from the QBus to the PCI bus. The Qx-FIFO supports sixty-four 32-bit entries. The Qx-FIFO accepts data from an external QBus master while transferring data to a PCI target (for information, see "Writes" on page 46).

The Qx-FIFO is on the data path for single delayed writes. A delayed write must be completed before the following write can be posted.

The Qr-FIFO is a 32-byte buffer which stores data read from PCI Targets.

3.2.3 PCI Master Module

The PCI Master Module is a 32 bit/33MHz *PCI 2.2 Specification* compliant master interface. PCI signals supported by the QSpan II are outlined in "PCI Bus Signals" on page 172.

QSpan II masters the PCI bus through its PCI Master Module. The PCI Master Module is available to the QBus Slave Channel (access from a remote QBus master) and the IDMA/DMA Channel.

3.3 Channel Description

The operation of the QBus Slave Channel is described in the following sections by tracing the path of a transaction from the QBus to the PCI bus. This is completed by dividing a transaction into three phases:

- Address Phase: This section describes transaction decoding and how address information from the QBus is passed to a corresponding address space on the PCI bus.
- Data Phase: This section describes endian mapping and byte-lane translation through the QBus Slave Channel. This section also describes the methods that data is buffered in the QBus Slave Channel depending on the programming of the QBus Slave images.
- Termination Phase: This section discusses how terminations from a PCI target are communicated to the master on the QBus. It also describes how the QSpan II PCI Master Module handles terminations (for example, retries or Target-Aborts). We also describe the terminations the QSpan II issues as a QBus slave device.

© 2019 Renesas Electronics Corporation

3.4 Address Phase

3.4.1 Transaction Decoding and QBus Slave Images

QSpan II accepts a transaction through its QBus Slave Module when one of its chip selects is asserted along with the Address Strobe (AS_) or Transaction Start signal (TS_). The chip selects, CSREG_ and CSPCI_, do not need to be detected asserted on the same clock edge as TS_ for QBus Slave Channel accesses. This allows for wait states to be inserted to perform address decoding. However, the IDMA Channel requires that CSPCI_ be detected asserted on the same clock edge as TS_ for dual-address IDMA transfers.

Single address IDMA transfers do not require CSPCI_ to be asserted.

If CSREG_ is asserted, then the transaction is decoded as a QSpan II register access (if the address 0x504 is a PCI Configuration cycle, see Chapter 7: “The Register Channel” on page 103). In order to access the PCI bus, the QBus master (or address decoder circuitry) asserts the PCI chip-select pin (CSPCI_) and the QBus Slave Module claims the cycle for the QBus Slave Channel. One of the two QBus Slave Images is selected during this transaction. The QBus Slave Image is qualified by the Image Select Signal (IMSEL).

The type of PCI cycle generated by the QSpan II depends on the following:

- which QBus Slave Image is selected
- the type of transaction initiated by the external QBus master

The level of IMSEL determines which of the two QBus Slave Images is used. If IMSEL is 0, QBus Slave Image 0 is selected (see Table 133 on page 283 and Table 138 on page 285); if IMSEL is 1, QBus Slave Image 1 is selected (see Table 140 on page 287 and Table 145 on page 289). The levels of BURST_ and R/W_ determine whether the QSpan II will generate a single PCI cycle or a burst, a PCI read or a write, respectively. There is some interaction between images and hardware signals, as described in Tables 133 to 145.

A Slave Image is a set of parameters which are encoded in QSpan II registers. A Slave Image controls transfers between the QBus and the PCI bus. Similar Target Images are provided in the PCI Target Channel. Two QBus Slave images of equal capability are provided so that designers can quickly access — on the basis of hardware rather than software — PCI addresses from the QBus, or access addresses in different ways. The two Slave Images are completely independent from one another.

For example, the designer can set-up QBus Slave Image 0 to access a hard-disk using 128 Mbytes of memory in PCI memory space. The designer can simultaneously have QBus Slave Image 1 available to access a different device, with its own memory size. The designer can access the first device with posted writes — Posted Write Enable (PWEN) bit set to 1 — and the other with delayed writes — PWEN set to 0. For a third type of access, it would be necessary to share one of the Slave Images.

© 2019 Renesas Electronics Corporation

The following tables summarize the QBus Slave Image control and address fields.

Table 3: Address Fields for QBus Slave Image

Field	Abbreviation and Register Page	Description
Block Size	BS (Table 138 on page 285 and Table 145 on page 289)	Amount of PCI memory accessible from QBus
PCI Address Space	PAS (Table 133 on page 283 and Table 140 on page 287)	Mapping to PCI memory space or I/O space
Translation Address	TA (Table 138 on page 285 and Table 145 on page 289)	Address bits that are substituted to generate the PCI bus address
Enable Address Translation	EN (Table 138 on page 285 and Table 145 on page 289)	Enables address translation using TA field

Table 4: Control Fields for QBus Slave Image

Field	Abbreviation and Register Page	Description
Posted Write	PWEN (Table 133 on page 283 and Table 140 on page 287)	Posted write enable bit
Prefetch Read	PREN (Table 133 on page 283 and Table 140 on page 287)	Prefetch read enable bit

The QBus Slave Channel allows a QBus master to access a range of addresses in PCI Memory or I/O space. The PCI address space bit (PAS) of the selected image determines whether the current transfer is directed towards PCI Memory or I/O space. The range of addresses that can be accessed through a Slave Image is controlled by the block size (BS) field. Up to 2 Gbytes of PCI Memory or I/O space can be accessed from the QBus in one Slave Image if address translation is required. The use of the Block Size, PCI Address Space, Translation Address and Enable Address Translation fields is discussed in “Address Translation” on page 40, and “Address Phase on the PCI Bus” on page 43.

The QBus Slave Image Control registers specify how writes are processed (see Table 133 on page 283 and Table 140 on page 287). If the PWEN bit is 1, the QSpan II will perform posted writes when the specific QBus Slave Image is accessed with a single write. Otherwise writes are handled as single delayed transactions. If the PREN bit is 1, the QSpan II will perform a burst read on the PCI bus when the MPC860 or MC68360 performs a single 32-bit read on the QBus. Otherwise, the QSpan II will handle this as a single delayed read transaction.

QBus Slave Image 0 can also be programmed from an external EEPROM (for information, see “Mapping of EEPROM Bits to QSpan II Registers” on page 124.

© 2019 Renesas Electronics Corporation

3.4.1.1 MPC860 Cycles

QSpan II behaves as an MPC860 slave in response to the assertion of the TS_ signal when it is powered-up as an MPC860 slave (see “QBus Slave Module” on page 35). When the QBus Slave Module receives TS_ it responds with DSACK1_/TA_, BERR/TEA_, or HALT_/TRETRY_. QSpan II acknowledges the transaction if either CSREG_ or CSPCI_ is sampled active in conjunction with TS_. QSpan II samples the address bus and control signals on the same rising edge of QCLK in which it samples either CSPCI_ or CSREG_ asserted.

If BURST_/TIP_ is asserted at the beginning of the bus cycle, along with the address, the QSpan II accepts the incoming cycle as a burst. During bursts, the QSpan II monitors BDIP_, which when negated, indicates the current data phase is second last.

When the QSpan II operates as an MPC860 slave for non-IDMA transfers, it functions as a 32-bit peripheral and must be addressed as a 32-bit peripheral. External QBus masters must comply with the MPC860 timing specification.

3.4.1.2 MC68360 Cycles

QSpan II behaves as a MC68360 slave in response to the assertion of the Address Strobe (AS_) signal. When it receives AS_ it asserts a subset of DSACK1_/TA_, DSACK0_, BERR_/TEA_ and HALT_/TRETRY_. QSpan II acknowledges the transaction if either CSREG_ or CSPCI_ is sampled active in conjunction with AS_. QSpan II does not require that the input signals qualified by AS_ be valid when AS_ is asserted — it requires only that they meet the set-up time before the same falling clock edge when AS_ is first sampled asserted.

When the QSpan II operates as a MC68360 slave, it functions as a 32-bit peripheral in synchronous mode. As a master, the QSpan II also operates synchronously and therefore the Bus Synchronous Timing mode (BSTM) bit in the MC68360 must be set to 1 (for more information, see the *Motorola MC68360 User’s Manual*). External QBus masters must comply with the MC68360 timing specification.

3.4.1.3 M68040 Cycles

QSpan II behaves as an M68040 slave in response to the assertion of the TS_ signal when it is powered-up as an M68040 slave (see “QBus Master and Slave Modes” on page 156). When the QBus Slave Module receives TS_ it responds with DSACK1_/TA_ or BERR_/TEA_. QSpan II recognizes a transaction as intended for it, and acknowledges it accordingly, only if one of CSREG_ or CSPCI_ is sampled active in conjunction with TS_. QSpan II samples the address bus and other TS_ qualified signals on the same rising edge of QCLK in which it samples TS_ asserted. The QBus Slave Module accepts bursting of incoming data.

When the QSpan II operates as an M68040 slave, it functions as a 32-bit peripheral in synchronous mode and must be addressed as a 32-bit peripheral. External QBus masters must comply with the M68040 timing specification.

© 2019 Renesas Electronics Corporation

3.4.2 PCI Bus Request

The PCI Master Module requests the PCI bus when one of the following occurs:

- write data is received in the Qx-FIFO
- after the last data phase of a burst write is received in the Qx-FIFO
- if there is a read request

If the QSpan II is powered up to use an external PCI bus arbiter when it requires control of the PCI bus, it asserts REQ# and gains bus mastership when the PCI arbiter asserts grant. If the QSpan II is powered up to use the internal PCI bus arbiter, the request-grant signals are internal. If the arbiter removes grant after the QSpan II has begun its PCI transaction, the QSpan II completes the current cycle and releases the PCI bus. This means that the QSpan II PCI Master Module will have to re-arbitrate for the PCI bus after every cycle if its grant is removed. QSpan II performance as PCI master can be enhanced through bus parking, as defined in the *PCI Local Bus Specification 2.2* (for more information about bus parking, see “Bus Parking” on page 142).

QSpan II cannot be master and target on the PCI bus at the same time.

3.4.3 Address Translation

The QBus Slave Channel contains an Address Generator (see Figure 4) which is used if address translation is enabled (EN bit in Table 138 or Table 145). The Address Generator produces the PCI address using three inputs: the address of the QBus signal (A[31:0]), the block size of the QBus Slave Image (BS field of the QBSIx_AT register), and the translation address of the QBus Slave Image (TA field of the QBSIx_AT register). The translation address is a 16-bit number whose upper bits specify the location of the Target Image on the PCI bus. The correlation between BS and the number of TA bits to use in generating the PCI address is shown in Table 5 on page 42.

For example, with a 64 Kbyte block size, the Address Generator copies the entire translation address into the PCI address, but only copies the lower 16 bits from the QBus address signals. With a 2 Gbyte block size, the Address Generator copies all but bit 31 from the QBus address signal. For example, the Address Generator translates A[31] only while copying A[30:0]), and uses the top translation address bit as bit 31 of the PCI address.

© 2019 Renesas Electronics Corporation

Figure 4: Address Generator for QBus Slave Channel Transfers

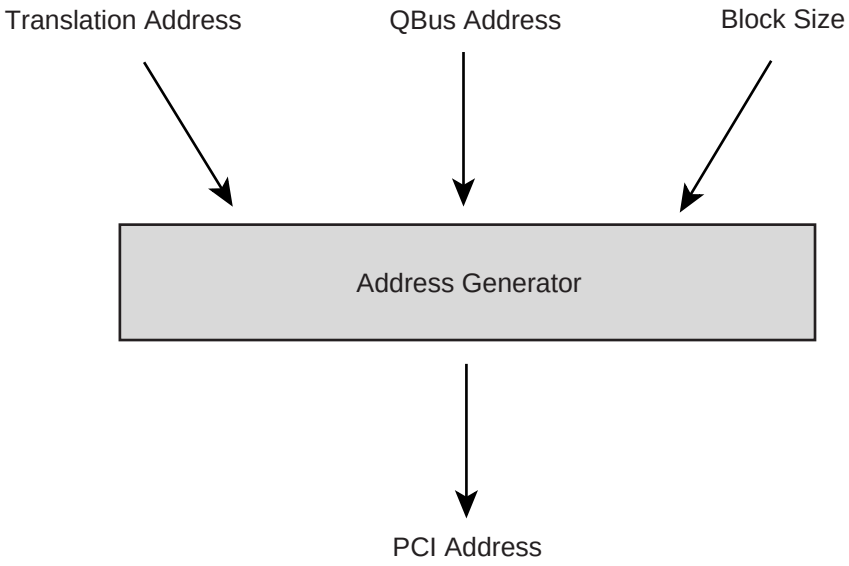

This manual adopts the convention that the most significant bit (address or data) is always the largest number. MPC860 designers must ensure that they connect their pins accordingly. For example, pin A[31] on the QSpan II connects to pin A[31] on the MC68360 bus, but connects to pin A[0] on the MPC860 bus. This applies to all MPC860 buses (D[31:0], AT[3:0], TSIZ[1:0]) not only the address bus.

© 2019 Renesas Electronics Corporation

Table 5: Translation of QBus Address to PCI Address

BS in QBSI0_CTL or QBSI1_CTL	Block Size	Address Lines Translated	Translation Address Bits Copied
0000	64 Kbytes	A31–A16	TA31–TA16
0001	128 Kbytes	A31–A17	TA31–TA17
0010	256 Kbytes	A31–A18	TA31–TA18
0011	512 Kbytes	A31–A19	TA31–TA19
0100	1 Mbyte	A31–A20	TA31–TA20
0101	2 Mbytes	A31–A21	TA31–TA21
0110	4 Mbytes	A31–A22	TA31–TA22
0111	8 Mbytes	A31–A23	TA31–TA23
1000	16 Mbytes	A31–A24	TA31–TA24
1001	32 Mbytes	A31–A25	TA31–TA25
1010	64 Mbytes	A31–A26	TA31–TA26
1011	128 Mbytes	A31–A27	TA31–TA27
1100	256 Mbytes	A31–A28	TA31–TA28
1101	512 Mbytes	A31–A29	TA31–TA29
1110	1 Gbyte	A31–A30	TA31–TA30
1111	2 Gbytes	A31	TA31

© 2019 Renesas Electronics Corporation

3.4.4 Address Phase on the PCI Bus

The address supplied on the AD[31:0] lines on the PCI bus is the result of the address translation described in the previous section. The PCI command encoding on the C/BE#[3:0] lines is determined by the type of transaction on the QBus, and the programming of the PCI Bus Address Space (PAS) and Prefetch Read Enable (PREN) bits in the QBus Slave Image Control Registers (see Table 133 on page 283 or Table 140 on page 287). The following table lists the C/BE encoding supported by the QSpan II.

Table 6: Command Type Encoding for Transfer Type

C/BE# [3:0]	Command Type	QSpan II Capability
0000	Interrupt Acknowledge	See “Interrupt Acknowledge Cycle” on page 119
0001	Special Cycle	N/A
0010	I/O Read	Target/Master
0011	I/O Write	Target/Master
0100	Reserved	N/A
0101	Reserved	N/A
0110	Memory Read	Target/Master
0111	Memory Write	Target/Master
1000	Reserved	N/A
1001	Reserved	N/A
1010	Configuration Read	Target/Master
1011	Configuration Write	Target/Master
1100	Memory Read Multiple	Target[a]/Master
1101	Dual Address Cycle	N/A
1110	Memory Read Line	Targeta/Master
1111	Memory Write and Invalidate	Target[b]/Master

a. These commands are aliased to a memory read.

b. This command is aliased to a memory write.

© 2019 Renesas Electronics Corporation

PCI Targets are expected to assert DEVSEL# if they have decoded the access. If a target does not respond with DEVSEL# within 6 clocks, a Master-Abort is generated by the QSpan II. The following shows the mapping from QBus transaction type to PCI transaction type as a function of PAS programming.

Table 7: Translation from QBus Transaction to PCI Transaction Type

QBus transaction received	PAS bit programming	PCI transaction type
Single or Burst Read	Memory	Memory Read
Single Read	I/O	I/O Read
Burst Read	I/O	None[a]
Single or Burst Write	Memory	Memory Write
Single Write	I/O	I/O Write
Burst Write	I/O	None[a]

a. In this case an error is signaled on the QBus.

3.5 Data Phase

This section describes how endian mapping is executed in the QBus Slave Channel. It also discusses the data path for different transaction types.

3.5.1 Endian Mapping

The PCI bus and Motorola processors differ in the way they order and address bytes. These differences are explained in Appendix E: “Endian Mapping” on page 389. This section describes how the QSpan II translates cycles from the QBus to the PCI bus.

The PCI bus is always a Little-Endian environment. The QBus can be configured as Little-Endian or Big-Endian, depending on the value of the QBus Byte Ordering Control bit (QB_BOC) in the MISC_CTL register (see Table 127 on page 274). The default mode for the QBus is Big-Endian. QSpan II translates byte-lane ordering when the QBus is Big-Endian, while preserving the addressing of bytes. When the QBus is Little-Endian, the QSpan II preserves byte-lane ordering, while translating the addressing of bytes. Note that the QB_BOC bit affects transactions in all channels.

© 2019 Renesas Electronics Corporation

The following tables describe cycle mapping for Little-Endian and Big-Endian of all sizes (8, 16, 24, or 32 bits).

Table 8: Little-Endian QBus Slave Channel Cycle Mapping

QBus			PCI Bus	
SIZ[1:0]	**A[1:0]**	**D[31:0]**	**BE[3:0]#**	**D[31:0]**
01	00	B3 xx xx xx	0111	B3 xx xx xx
01	01	xx B2 xx xx	1011	xx B2 xx xx
01	10	xx xx B1 xx	1101	xx xx B1 xx
01	11	xx xx xx B0	1110	xx xx xx B0
10	00	B3 B2 xx xx	0011	B3 B2 xx xx
10	01	xx B2 B1 xx	1001	xx B2 B1 xx
10	10	xx xx B1 B0	1100	xx xx B1 B0
10	11	xx xx xx B0	1110	xx xx xx B0
11	00	B3 B2 B1 xx	0001	B3 B2 B1 xx
11	01	xx B2 B1 B0	1000	xx B2 B1 B0
11	10	xx xx B1 B0	1100	xx xx B1 B0
11	11	xx xx xx B0	1110	xx xx xx B0
00	00	B3 B2 B1 B0	0000	B3 B2 B1 B0
00	01	xx B2 B1 B0	1000	xx B2 B1 B0
00	10	xx xx B1 B0	1100	xx xx B1 B0
00	11	xx xx xx B0	1110	xx xx xx B0

© 2019 Renesas Electronics Corporation

Table 9: Big-Endian QBus Slave Channel Cycle Mapping

QBus			PCI Bus	
SIZ[1:0]	A[1:0]	D[31:0]	BE[3:0]#	D[31:0]
01	00	B0 xx xx xx	1110	xx xx xx B0
01	01	xx B1 xx xx	1101	xx xx B1 xx
01	10	xx xx B2 xx	1011	xx B2 xx xx
01	11	xx xx xx B3	0111	B3 xx xx xx
10	00	B0 B1 xx xx	1100	xx xx B1 B0
10	01	xx B1 B2 xx	1001	xx B2 B1 xx
10	10	xx xx B2 B3	0011	B3 B2 xx xx
10	11	xx xx xx B3	0111	B3 xx xx xx
11	00	B0 B1 B2 xx	1000	xx B2 B1 B0
11	01	xx B1 B2 B3	0001	B3 B2 B1 xx
11	10	xx xx B2 B3	0011	B3 B2 xx xx
11	11	xx xx xx B3	0111	B3 xx xx xx
00	00	B0 B1 B2 B3	0000	B3 B2 B1 B0
00	01	xx B1 B2 B3	0001	B3 B2 B1 xx
00	10	xx xx B2 B3	0011	B3 B2 xx xx
00	11	xx xx xx B3	0111	B3 xx xx xx

3.5.2 Data Path

3.5.2.1 Writes

If the PWEN bit is set in the QBSIx_CTL register, single write transactions from the QBus will be posted (see Table 133 on page 283 and Table 140 on page 287). The level of IMSEL determines which QBSIx_CTL register is used (see “Transaction Decoding and QBus Slave Images” on page 37). If the PWEN bit is cleared — this is the default setting — single write transactions are treated as delayed transactions. Burst write transfers are always treated as posted writes.

Both posted and delayed writes travel through the Qx-FIFO. With posted writes, data acknowledgment is provided on the QBus as soon as the write data is queued in the Qx-FIFO. Multiple posted writes can be queued up to the 256-byte capacity of the Qx-FIFO. With delayed writes, data acknowledgment is provided on the QBus after completion on the PCI bus. This means only one delayed write at a time. Additional writes are retried while a delayed write is in progress.

© 2019 Renesas Electronics Corporation

Posted write transfers are stored in the Qx-FIFO. Address and data are stored as separate entries in the Qx-FIFO. For example, one single cycle data beat transaction is stored as two Qx-FIFO entries: one entry for the address of the transaction, and one for the data. The address entry contains the translated PCI address space and command information mapping relevant to the QBus Slave Image which is accessed (see “Address Phase” on page 37). The data entry contains the data and the byte enables. Thus, any reprogramming of QBus Slave Image attributes will only be reflected in Qx-FIFO entries queued after the reprogramming. Transactions queued before the reprogramming are delivered to the PCI bus with the QBus Slave Image attributes that were in use before the reprogramming. QSpan II never packs data in the Qx-FIFO. For example, two 16-bit data beats are not packed as a single 32-bit data entry but as four separate entries in the Qx-FIFO (address, data, address, data).

If a QBus master attempts to post a write transaction when the Qx-FIFO does not have enough space, the QBus Slave Channel retries the master. The exact manner in which the master is retried depends on whether the master is an MC68360, MPC860 or M68040 device (see “Termination Phase” on page 51. Since single transfers require two entries in the Qx-FIFO, two entries must be available before the QBus Slave Module accepts a single write transaction. However, the 256-byte depth of the Qx-FIFO ensures a very low probability that the Qx-FIFO is too full to accept write transactions.

The PCI Master Module requests the PCI bus when there is a complete transaction in the Qx-FIFO. During write transactions, the PCI Master Module uses transactions queued in the Qx-FIFO to generate transactions on the PCI bus. No address phase deletion is performed; thus, the length of a transaction on the PCI bus corresponds to the length of the queued QBus transaction.

Only MPC860 and M68040 Masters are capable of initiating burst transactions. Incoming burst write transactions comprise five entries in the Qx-FIFO: one entry for address and command information, and four data entries. The QBus Slave Module accepts bursts if the Qx-FIFO has enough room for the entire burst. Burst transfers are never retried while they are in progress. The MPC860 and M68040 perform bursts of 16 bytes. Bursts accepted from the QBus are translated to the PCI bus as one or more burst transactions. QSpan II always bursts using linear increment addressing.

Burst transactions are always posted, regardless of the programming of the PWEN bit in the selected QBSIx_CTL register. QSpan II accepts bursts targeted to Memory space, but not to I/O or Configuration space. If the PCI address space (PAS) bit of the selected image is set to I/O space and a burst is initiated by a QBus master, then the QSpan II signals a bus error. Similarly, if a burst is attempted to the QSpan II registers, a bus error is signaled by the QSpan II (see “Termination Phase” on page 51).

To improve performance of posted write transfers, set the QSC_PW bit in the MISC_CTL2 register (see Table 130 on page 278). This configuration reduces the number of idle PCI clocks between posted write transfers initiated by the QSpan II’s PCI master.

© 2019 Renesas Electronics Corporation

3.5.2.2 Read Transactions — Burst and Single Cycle

During a read transaction, address, data, size and transaction code signals are latched by the QBus Slave Module. After latching the information, the QSpan II retries all incoming QBus cycles, but does not latch them until the read completes on the QBus. QSpan II becomes PCI bus master and performs a read transaction on the PCI bus. The read data is queued in the Qr-FIFO. If the PCI transaction completes normally, then the QBus master is provided with the data from the Qr-FIFO and the transaction terminates normally on the QBus (see “Termination Phase” on page 51).

If the QBus master attempts a burst read to the QBus Slave Module, and the Slave Image is programmed for PCI Memory Space, then the QSpan II initiates a read cycle. If the read is attempted to a Slave Image programmed for PCI I/O Space, or to QSpan II registers, then the QBus Slave Module terminates the access with a bus error.

A burst read is four beats in length (16 bytes).

3.5.2.3 Prefetched Reads

QSpan II supports prefetched reads in the QBus Slave Channel for MPC860 and MC68360 cycles; M68040 cycles are not supported. To enable prefetching on an image basis, set the PREN bit in QBSI0_CTL or QBSI1_CTL. When this bit is set, and the QSpan II decodes a single 32-bit aligned, 4-byte read on the QBus from an external master, it initiates a prefetch of 32 bytes on the PCI bus using linear-address incrementing. Once all 32 bytes are available in the Qr-FIFO, the external QBus master receives the first four bytes of read data. If a subsequent read is performed at the next address, which is the current address +0x4, the QSpan II returns the data from Qr-FIFO instead of completing another read on PCI.

Transaction ordering is strictly enforced for the first data read. Before the read is completed on the PCI bus, any posted writes in the Qx-FIFO are emptied on the PCI bus. Before the first read data is returned on the QBus, any posted writes in the Px-FIFO are emptied on the QBus. When reading subsequent prefetched data from the Qr-FIFO, the QSpan II does not check whether the posted FIFOs (Qx-FIFO and Px-FIFO) are empty.

The prefetched data, not including the first 4 bytes, is invalidated under the following conditions:

- QBus discard timer expires: 32768 QCLKs after the first read data is available
- Delayed write cycle is latched in the QBus Slave Channel
- Delayed read cycle to an address that is not the current address +0x4, or a non 4-byte access through the QBus Slave Channel
- Burst MPC860 read cycle through the QBus Slave Channel

© 2019 Renesas Electronics Corporation

When the QSpan II detects a single read cycle that is not 32-bit aligned or is not a 4-byte access, it performs a single read on the PCI bus with the appropriate byte enables.

If the QSpan II detects a prefetchable cycle when it is active during an MPC860 IDMA transfer (DREQ_ asserted), it converts the prefetch cycle into a normal delayed read cycle because the DACK_ can be delayed with respect to TS_. QSpan II does not need to convert prefetchable cycles of the MC68360 because DACK_ has the same timing as AS_.

During a burst read on the PCI bus (which is a result of a prefetch) if one of the data beats is terminated with an error, the 32 bytes are invalidated and the QSpan II terminates the cycle on the QBus with a Bus Error.

3.5.2.4 Delayed Reads and PCI Transaction Ordering

In order to satisfy PCI Transaction Ordering requirements, the rules described in this section are implemented in the QSpan II (see “Delayed Reads” in the *PCI 2.2 Specification*). These rules affect the relation between delayed reads and posted writes in the QBus Slave Channel. The rules also affect the relation between delayed reads in the QBus Slave Channel and posted writes in the PCI Target Channel.

The following list summarizes the sequence of QSpan II events:

1. The QBus Slave Module receives a read request.
2. The QBus Slave Channel empties the Qx-FIFO of any writes or completes any current reads.
3. The QBus Slave Module latches the read request.
4. The QBus Slave Module retries subsequent non-register accesses.
5. The PCI Master Module completes the read on the PCI bus.
6. The PCI Target Module retries all non-register accesses.
7. The Px-FIFO is emptied.

In the case of QBus Slave Channel burst reads:

8. The PCI Target Module allows posted writes to the Px-FIFO.
9. The QBus Slave Module allows the burst read to complete on the QBus.
10. The QBus Slave Module accepts new accesses.

In the case of QBus Slave Channel single reads:

8. The QBus Slave Module allows the read to complete on the QBus.
9. The QBus allows posted writes to the Qx-FIFO, even if the single read has not completed.
10. The PCI Target Module allows posted writes to the Px-FIFO.

© 2019 Renesas Electronics Corporation

Transaction Ordering Disable Option

The No Transaction Ordering (NOTO) bit in the MISC_CTL2 register disables transaction ordering between the QBus Slave Channel and the PCI Target Channel (see Table 130 on page 278). When this bit is set, a read in one channel is unaffected by posted writes in the other channel.

This feature improves system performance, especially when using the DMA and where strict transaction ordering is not required.

3.5.3 PCI Target Channel Reads

In PCI Target Channel reads, the PCI Target Module latches the read request even when there is data in the Px-FIFO. The PCI Target Module only passes the information onto the QBus Master Module when the Px-FIFO is empty (see “Reads and PCI Transaction Ordering” on page 75).

3.5.4 Parity Monitoring by PCI Master Module

QSpan II monitors the Parity signal (PAR) when it accepts data as a PCI master during a read, and drives PAR when it provides data as a PCI master during a write. QSpan II also drives PAR during the address phase of a transaction when it is a PCI master. In both address and data phases, the PAR signal provides even parity for C/BE#[3:0] and AD[31:0].

The PERESP (Parity Error Response) bit in the PCI_CS (PCI Configuration Space Control and Status register) determines whether or not the QSpan II responds to parity errors as PCI master (see Table 70 on page 201). Data parity errors are reported through the assertion of PERR# if the PERESP bit is set.

The Detected Parity Error (D_PE) bit in the PCI_CS register is set if the QSpan II encounters one of the following situations:

- a parity error during an address phase
- a parity error during a write when QSpan II is the target
- a parity error during a read when QSpan II is the master

The Master Data Parity Error Detect (MD_PED) bit in the PCI_CS register is set if parity checking is enabled through the PERESP bit, and the QSpan II detects a parity error while it is PCI master (for example, it asserts PERR# during a read transaction or receives PERR# during a write). If the QSpan II sets the MD_PED bit while the MDPED_EN (Data Parity Detected Interrupt Enable) bit in the INT_CTL register is set (see Table 120 on page 263), then the QSpan II asserts an interrupt on the QBus or PCI bus interface (see Chapter 8: “The Interrupt Channel” on page 113).

QSpan II continues the transaction regardless of any parity errors reported during the transaction.

© 2019 Renesas Electronics Corporation

3.6 Termination Phase

Except during posted writes, the termination generated by the QBus Slave Module is determined by the termination on the PCI bus (see “Posted Write Termination” on page 53). For read transactions and delayed write transactions, the QBus master is retried until the PCI transaction is complete. Once the PCI transaction is complete, the QBus master receives a translated version of the PCI termination. The following table shows how PCI terminations are translated to the QBus Slave Module during delayed transactions, such as delayed single reads, delayed single writes and reads.

Table 10: Translation of Cycle Termination[a] from PCI Bus to QBus

PCI Bus Termination Received	QBus Termination Issued
Master-Completion	Normal
Master-Abort	Bus Error if MA_BE_D bit is 0. Normal if MA_BE_D bit is 1 (reads return all 1s, write data flushed).
Target-Retry	N/A[b]
Target-Disconnect	
Target-Abort	Bus Error if MA_BE_D bit is 1 and the TA_BE_EN bit is 1. Normal if MA_BE_D bit is 1 and the TA_BE_EN bit is 0 (reads all 1s; write data flushed).

a. This table applies to delayed transfers.

b. These cycles are not translated. The QBus Slave Module retries the master during delayed transactions until one of the other terminations is received.

The QBus Slave Module retries accesses under the following conditions:

- A QBus master attempts to post another write to the QBus Slave Channel and the Qx-FIFO does not have enough room for the write.
- A QBus master attempts a burst write transfer and there is not enough room in the Qx-FIFO for the complete burst. The QBus Slave Module never retries an ongoing burst transaction.
- A prefetched read is in progress in the QBus Slave Channel.
- A delayed transfer — read or write — is in progress in the QBus Slave Channel.

The QBus Slave Module generates a bus error under the following conditions:

- A QBus master attempts to burst to a Slave Image whose transfers have been set to I/O space.

© 2019 Renesas Electronics Corporation

- A delayed transfer or a prefetched read results in a Target-Abort and the MA_BE_D bit in the MISC_CTL register is 0, or the MA_BE_D bit is 1 and the TA_BE_EN bit in the MISC_CTL2 register is 1.
- A delayed transfer results in a Master-Abort and the MA_BE_D bit in the MISC_CTL register is 0.

Set the MA_BE_D (see Table 127 on page 274) and TA_BE_EN (see Table 130 on page 278) bits if the QSpan II is used as a host bus bridge. This is in compliance with the *PCI Local Bus Specification 2.2*.

The mapping of the QBus terminations to the MC68360, MPC860, and M68040 buses is shown in Tables 11 to 13.

Table 11: MC68360 Cycle Terminations of QBus Slave Module

Termination Type	DSACK0_, DSACK1_/TA_	BERR_/TEA_	HALT_/TRETRY_
Normal	Asserted	Tri-stated[a]	Tri-stated
Bus Error	Asserted	Asserted	Tri-stated
Retry	Asserted	Asserted	Asserted

a. External pull-ups bring tri-stated signals to the non-asserted state.

Table 12: MPC860 Cycle Terminations of QBus Slave Module

Termination Type	DSACK1_/TA_	BERR_/TEA_	HALT_/TRETRY_
Normal	Asserted	Tri-stated[a]	Tri-stated
Bus Error	Tri-stated	Asserted	Tri-stated
Retry	Tri-stated	Tri-stated	Asserted

a. External pull-ups bring tri-stated signals to the non-asserted state.

Table 13: M68040 Cycle Terminations of QBus Slave Module

Termination Type	DSACK1_/TA_	BERR_/TEA_
Normal	Asserted	Tri-stated[a]
Bus Error	Negated	Asserted
Retry	Asserted	Asserted

a. External pull-ups bring tri-stated signals to the non-asserted state.

© 2019 Renesas Electronics Corporation

The following table summarizes the QSpan II's response to abnormal terminations on the PCI bus.

Table 14: QBus Slave Channel Error Responses

Transfer-type	PCI Error Type	MA_BE_D in MISC_CTL	TA_BE_EN in MISC_CTL2	Flush FIFO[a]	QBus Termination
read	Master-Abort	0	x	Yes	Bus error
		1	x	Yes	Normal (return all 1)
	Target-Abort	0	x	Yes	Bus error
		1	0	Yes	Normal (return all 1)
			1	Yes	Bus error
posted write	Master-Abort	0	x	No. Lose one entry, continue sinking data.[b]	Normal
		1	x	No. Lose one entry, continue sinking data.[b]	Normal
	Target-Abort	0	x	No. Lose one entry, continue sinking data.[b]	Normal
		1	x	No. Lose one entry, continue sinking data.[b]	Normal

a. This column pertains to Qr-FIFO for reads, and Qx-FIFO for writes.

b. If a single posted write transfer results in a Master-Abort, then this complete transaction is lost and the QSpan will continue sinking any subsequent posted write entries.
If a burst write results in a Master-Abort on the first data beat, then this data entry is lost. It is likely that the second, third and fourth entries of the burst will also result in a Master-Abort and this data will be lost as well.

3.6.1 Posted Write Termination

QBus terminations of posted writes are not influenced by the PCI bus termination. If a posted write is terminated by a Target-Abort or Master-Abort on the PCI bus, this termination is not signaled on the QBus to the QBus master. However, errors on the PCI bus are accessible to external QBus Masters through error logging. Error logging is enabled by the EN bit of the PCI Bus Error Log Control and Status Register (PB_ERRCS) register. Errors can be enabled to cause interrupts (see Table 98 on page 234).

© 2019 Renesas Electronics Corporation

QSpan II can record the address, command, data, and byte enables of a posted write transaction that results in a Master-Abort or Target-Abort. The EN bit of the PB_ERRCS register enables error recording. If enabled, the occurrence of an error is indicated by the ES bit of the PB_ERRCS register. Transfers in the QBus Slave Channel are suspended until the ES bit is cleared if the Unlock QBus Slave Channel (UNL_QSC) bit in the PB_ERRCS register is set to 0 (see Table 98 on page 234). IDT recommends that the UNL_QSC bit always be set to 1 if error logging is enabled. If enabled, the PB_ERRCS register latches the command information of the transaction error (CMDERR field) as well as the byte enables of the transaction error (BE_ERR field). The address of the transaction error is latched in the PCI Bus Address Error Log (PB_AERR) register. The data of the transaction error is latched in the PCI Bus Data Error Log Register (PB_DERR) register.

If error logging is enabled with UNL_QSC set to 1, and the QBus Slave Channel is errored, the QSpan II's PCI bus Master interface is not halted. However, the error logs are frozen with the first failed transaction until the status bit is cleared.

If error logging is not enabled and the QBus Slave Channel incurs an error while dequeuing data, the errored transfer is lost and the Qx-FIFO operation continues with the next enqueued transfer.

An interrupt will be generated upon the logging of an error (ES bit in PB_ERRCS) only if the PCI Bus Error Log Interrupt Enable (PEL_EN) bit in the INT_CTL register is set (see Table 119 on page 260). If generated, the interrupt is directed to the QBus or the PCI bus, depending on the PCI Error Log Interrupt Direction (PEL_DIR) bit in the INT_DIR register (see Table 121 on page 266). Interrupts are described in Chapter 8: "The Interrupt Channel" on page 113.

3.7 PCI Master Retry Counter

QSpan II PCI master limits the number of times a cycle is repeated on the PCI bus due to an external PCI target terminating the cycle with a retry. QSpan II can be programmed to accept the following number of retires: 128, 256, 384, or indefinitely, depending on the setting of the MAX_RTRY in the MISC_CTL2 register (see Table 130 on page 278). Once the maximum number of retries is completed, the QSpan II discards the cycle and terminates the cycle on the QBus. Read cycles and delayed write cycles on the QBus Slave Channel are terminated on the QBus with a bus error. For posted writes to the Qx-FIFO, and if error logging is enabled, the QSpan II captures the discarded transfer in the PCI Error log.

© 2019 Renesas Electronics Corporation

Chapter 4: The PCI Target Channel

This chapter describes the QSpan II's PCI Target Channel. The following topics are discussed:

- "PCI Target Channel Architecture" on page 56
- "Channel Description" on page 58
- "Address Phase" on page 59
- "Data Phase" on page 66
- "Reads and PCI Transaction Ordering" on page 75
- "QBus Arbitration and Sampling" on page 76
- "Terminations" on page 78

4.1 Overview

An external PCI bus master can access a QBus slave through the QSpan II using its PCI Target Channel (see Figure 5). The initialization of this channel is discussed in "PCI Target Channel Initialization" on page 381.

© 2019 Renesas Electronics Corporation

Figure 5: PCI Target Channel — Functional Diagram

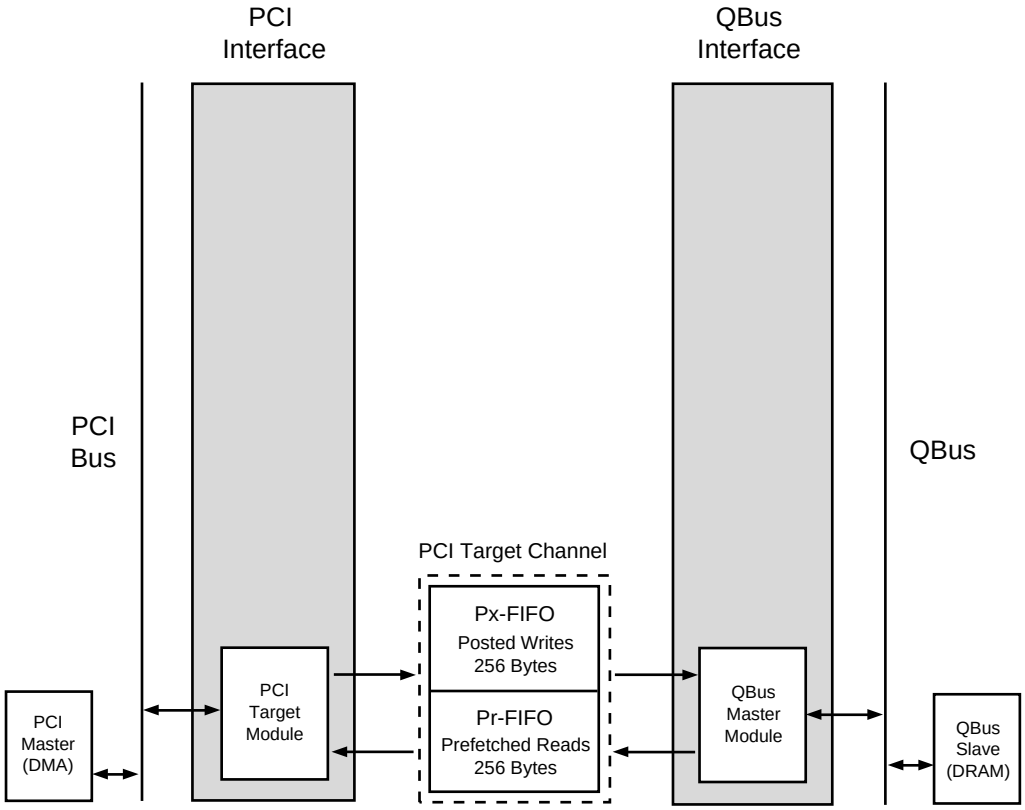

4.2 PCI Target Channel Architecture

Figure 5 shows the PCI Target Channel in relation to the QBus and the PCI bus. The arrows represent data flow. The QBus is shown as having one slave; the PCI bus is shown with a single PCI master. The PCI Target Channel has the following components:

- PCI Target Module
- Px-FIFO
- Pr-FIFO
- QBus Master Module

4.2.1 PCI Target Module

QSpan II's PCI Target Interface is a *PCI Local Bus Specification 2.2* compliant port. QSpan II does not implement SBO#, SDONE or PCI LOCK# functionality. A list of the PCI signals supported by the QSpan II is in "PCI Bus Signals" on page 172.

The PCI Target Module accepts Type 0 Configuration cycles and ignores Type 1 Configuration cycles. Configuration cycles are not passed to the QBus (for information, see "PCI Configuration Cycles Generated from the QBus" on page 108).

© 2019 Renesas Electronics Corporation

4.2.2 Px-FIFO and Pr-FIFO

The Px-FIFO is a 256-byte buffer for posted writes from the PCI bus to the QBus. The Px-FIFO can accept data from a PCI master while writing data to a QBus slave (see “Posted Writes” on page 72).

The Pr-FIFO is a separate 256-byte buffer for read data from the QBus (see “Prefetched Read Transactions” on page 74).

4.2.3 QBus Master Module

The QBus Master Module is a non-multiplexed 32-bit address, 32-bit data interface. This module can be treated as a 32-bit, 16-bit, or 8-bit interface by programming the DSIZE field of the PCI Target Image (see Table 17 on page 60).

The QBus Master Module can generate MC68360 (QUICC), MPC860 (PowerQUICC), or M68040 cycles depending on the QBus Master mode selected at reset. This reset option is determined jointly by the value of BDIP_ and SIZ[1] at reset. Table 15 presents the QBus Master mode options. For completeness, this table also includes the QBus Slave Module options. The Master/Slave mode (MSTSLV) field in the MISC_CTL register indicates the Master and Slave modes of the QBus (see Table 127 on page 274). The connections required for interfacing the QSpan II to an MC68360, MPC860, and/or M68040 are given in Appendix C: “Typical Applications” on page 359.

The QBus Master Module supports bursts reads and burst writes in MPC860 mode only.

Table 15: Reset Options for QBus Master and Slave Modes

Reset sampling		Master Mode	Slave Modes[a]
BDIP_	SIZ[1]		
0	0	MC68360	MC68360 and M68040
0	1	MC68360	MC68360 and MPC860
1	0	M68040	MC68360 and M68040
1	1	MPC860	MC68360 and MPC860

a. This column is included because the Master mode options can restrict which slave option that can be used: the M68040 Master mode is incompatible with the MPC860 Slave mode.

© 2019 Renesas Electronics Corporation

4.2.3.1 QBus Data Parity Generation and Detection

The QBus Master Module supports the generation and detection of QBus data parity. The use of QBus data parity is optional. The data parity is valid on the same clock cycle as the QBus data. QSpan II supports Odd and Even parity, and is controlled by the QBus Parity Encoding (QBUS_PAR) bit the in MISC_CTL2 register (see Table 130 on page 278). The default is Even parity, which is the same as the PCI bus. The detection of a QBus data parity error does not affect the operation of the QSpan II. PCI bus parity generation and detection is independent of QBus data parity generation and detection.

Four pins are used for the QBus Data Parity signals: DP[3:0]. When parity is set to Even, the number of ones on the QBus Data lines (D[7:0]) and DP[0] equal an even number. Similarly, for Odd parity, the number of ones on D[7:0] and DP[0] equal an odd number.

- DP[0] contains the parity for Data lines D[7:0]
- DP[1] contains the parity for Data lines D[15:8]
- DP[2] contains the parity for Data lines D[23:16]
- DP[3] contains the parity for Data lines D[31:24]

The QBus Master Module generates the data parity when it completes a master write cycle. If it detects a parity error during a master read cycle, it sets the QBus Data Parity Error Status (QDPE_S) bit in the INT_STAT register (see Table 119 on page 260). QSpan II can generate an external interrupt (INT# or QINT_) depending on the settings of the QDPE_EN bit in the INT_EN register, and the QDPE_DIR bit in the INT_DIR register (see Table 121 on page 266). Writing a 1 to the QDPE_S bit in the INT_STAT register negates the interrupt and clears the status bit (see Table 119 on page 260).

QSpan II only checks data parity on valid data. If a single byte transfer is completed on the QBus, only the valid byte on the data bus is checked; for example, D[31:24].

4.3 Channel Description

The operation of the PCI Target Channel is described in the following sections by tracing the path of a transaction from the PCI bus to the QBus. This is completed by dividing a transaction into the following components:

- Address Phase: This section describes how PCI bus accesses are decoded and how address information from the PCI bus is passed through to the QBus.
- Data Phase: This section describes endian mapping and byte-lane translation through the PCI Target Channel.
- QBus Arbitration and Sampling: This section describes QBus arbitration.
- Terminations: This section explains how terminations from the QBus are communicated back to the master on the PCI bus. It describes how the PCI Target Module handles different terminations (for example, retries or target-aborts). This section also explains the conditions that drive the terminations the QSpan II issues as a PCI target, and error logging mechanisms for posted writes.

© 2019 Renesas Electronics Corporation

4.4 Address Phase

4.4.1 Transaction Decoding

All decoding by the PCI Target Module is based on the address and command information produced by a PCI bus master. The PCI Target Module claims a cycle if there is an address driven on the PCI bus that matches an image programmed into the PCI Target Image registers. The parameters of a Target Image must not overlap with the 4 Kbytes of QSpan II Register Space or the other target image. The parameters for register accesses are discussed in “Register Access from the PCI Bus” on page 105.)

The type of cycle generated on the QBus is determined by the Target Image selected and C/BE[3:0]. A Target Image is a set of parameters that determines what addresses are decoded on the PCI bus and how cycles are translated from the PCI bus to the QBus. Two Target Images of equal capability are provided so that PCI Masters can quickly access different QBus devices, or the same device in different ways without having to reconfigure QSpan II registers. The two Target Images are independent from one another.

For example, one Target Image can be set-up to access 1 Mbyte of 16-bit SRAM on the QBus using delayed writes, while the other can access 64 Mbytes of 32-bit SDRAM on the QBus with posted writes. PCI Masters do not need to reconfigure QSpan II registers to access either of these devices. For a third type of access, it would be necessary to share one of the Target Images.

The following tables summarize the PCI Target Image control and address fields.

Table 16: Address Fields for PCI Target Image

Field	Description	Image	Register	See
Base Address (BA[31:16])	Address lines compared in decoding	0	PCI_BST0 or PBTI0_ADD	Table 75 on page 208 or Table 90 on page 224
		1	PCI_BST1 or PBTI1_ADD	Table 77 on page 210 or Table 93 on page 228
Block Size (BS[3:0])	Determines the number of AD lines that are examined when decoding accesses from the PCI bus.	0	PBTI0_CTL	Table 89 on page 222
		1	PBTI1_CTL	Table 92 on page 226

© 2019 Renesas Electronics Corporation

Table 16: Address Fields for PCI Target Image *(Continued)*

Field	Description	Image	Register	See
PCI Address Space (PAS)	Memory space or I/O space	0	PCI_BST0 or PBTI0_CTL	Table 75 on page 208 or Table 89 on page 222
		1	PCI_BST1 or PBTI1_CTL	Table 77 on page 210 or Table 92 on page 226
Translation Address (TA[31:16])	Address bits that are substituted to generate the QBus address	0	PBTI0_ADD	Table 90 on page 224
		1	PBTI1_ADD	Table 93 on page 228

Table 17: Control Fields for PCI Target Image

Field	Description	Image	Register	See
Image Enable (EN)	Enable bit	0	PBTI0_CTL	Table 89 on page 222
		1	PBTI1_CTL	Table 92 on page 226
Posted Write Enable (PWEN)	Determines whether writes are posted or processed as delayed transactions	0	PBTI0_CTL	Table 89 on page 222
		1	PBTI1_CTL	Table 92 on page 226
Transaction Code (TC[3:0])	Transaction code generated on the QBus	0	PBTI0_CTL	Table 89 on page 222
		1	PBTI1_CTL	Table 92 on page 226
Port Size (DSIZE)	QBus destination port size	0	PBTI0_CTL	Table 89 on page 222
		1	PBTI1_CTL	Table 92 on page 226
Prefetch Read Enable (PREN)	Determines whether the QSpan II prefetches data on the QBus	0	PBTI0_CTL	Table 89 on page 222
		1	PBTI1_CTL	Table 92 on page 226

© 2019 Renesas Electronics Corporation

Table 17: Control Fields for PCI Target Image *(Continued)*

Field	Description	Image	Register	See
Burst Write Enable (BRSTWREN)	Determines whether the QSpan II burst writes data on the QBus	0	PBTI0_CTL	Table 89 on page 222
		1	PBTI1_CTL	Table 92 on page 226
Invert Endianness (INVEND)	Determines whether the QSpan II inverts the endian setting of the QB_BOC bit in the MISC_CTL register	0	PBTI0_CTL	Table 89 on page 222
		1	PBTI1_CTL	Table 92 on page 226
Prefetch Count (PRCNT[5:0])	Determines the amount of data the QSpan II prefetches on the QBus.	0 and/or 1	MISC_CTL	Table 127 on page 274
PCI Target Channel Prefetch is image-based (PTP_IB)	Determines whether image-based prefetching is enabled	1	MISC_CTL2	Table 130 on page 278
Prefetch Count (PR_CNT2[5:0])	Determines the amount of data that the QSpan II prefetches on the QBus for accesses to Image 1, if PTP_IB=1	1	MISC_CTL2	Table 130 on page 278
QBus Burst 4 Data Phases (BURST_4)	Determines whether the QBus bursts four data phases, versus two or three data phases	0 and 1	MISC_CTL2	Table 130 on page 278
QBus Prefetch Single Dataphase (PR_SING)	Determines whether the QSpan II will generate single cycles to prefetch data as an MPC860 master	0 and 1	MISC_CTL2	Table 130 on page 278
Keep Bus Busy for Back-to-back cycles (KEEP_BB)	Determines whether Bus Busy is asserted for multiple cycles on the QBus	0 and 1	MISC_CTL2	Table 130 on page 278

PCI Target Images can be enabled or disabled by using the image enable bit. Disabling both PCI Target Images disables the PCI Target Channel.

For more information about register settings that affect the PCI Target Channel's operation, see the Miscellaneous Control registers — MISC_CTL (see Table 127 on page 274) and MISC_CTL2 (see Table 130 on page 278).

A PCI Target Image occupies a range of addresses within PCI Memory or I/O space. The PCI Address Space bit determines whether the Target Image lies in PCI Memory or I/O space. The range of addresses is specified by the base address field and the block size field. Up to 2 Gbytes of PCI memory per image can reside on the QBus.

© 2019 Renesas Electronics Corporation

There are constraints on the possible values of the block size and the base address. The block size must be one of the 16 block sizes listed in Table 18 on page 64. The base address must be aligned to a combination of the upper address lines between AD31 and AD16. The base address must be a multiple of the block size. For example, a 128-Mbyte image must be aligned to a 128-Mbyte boundary.

Address decoding is performed by decoding the most significant address lines as a function of the block size. For a 128-Mbyte PCI Target Image, the PCI Target Module only needs to decode the top five PCI address lines to know whether this image has been accessed. For a 64 Kbyte image, the PCI Target Module needs to decode the top 16 PCI address lines.

When one of its PCI Target Images is accessed, the QSpan II responds with DEVSEL# within two clocks of FRAME#. This makes the QSpan II a medium-speed device, as indicated by the Device Select (DEVSEL) field in the PCI_CS register (see Table 70 on page 201).

As a PCI target, the QSpan II responds to the following command types:

- I/O Read
- I/O Write
- Memory Read
- Memory Write
- Configuration Type 0 Read
- Configuration Type 0 Write
- Memory Read Multiple (aliased to Memory Read)
- Memory Read Line (aliased to Memory Read)
- Memory Write and Invalidate (aliased to Memory Write)

4.4.2 Address Translation

Figure 6 illustrates the general implementation of address translation in the QSpan II PCI Target Channel.

© 2019 Renesas Electronics Corporation

Figure 6: Address Generator for PCI Target Channel Transfers

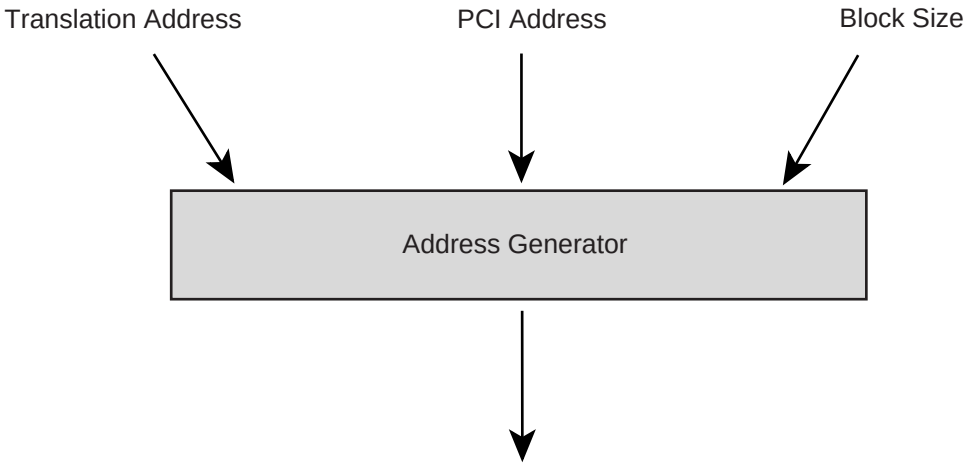

The Address Generator produces the QBus address using three inputs: the address generated by the PCI master (AD[31:0]), the block size of the PCI Target Image (BS field of the Target Image), and the translation address of the PCI Target Image (TA). The translation address is a 16-bit number whose upper bits specify the location of the Target Image on the QBus. If the translation address is programmed with the same value as that of the base address, then the PCI address is not translated but applied directly to the QBus transaction.

The most significant bits of the translation address are used by the Address Generator as determined by the programming of the image's block size. The number of these bits used depends on the programming of the BS bit. The correlation between block size and the number of most significant TA bits used in generating the QBus address is shown in Table 18. With a 64 Kbyte block size, the Address Generator copies the entire translation address into the QBus address, but only copies the lower 16 bits from the PCI address signal (for example, the Address Generator translates AD[31:16]). With a 2 Gbyte block size, the Address Generator copies all but bit 31 from the PCI address signal (for example, the Address Generator translates AD[31] only), and uses the top translation address bit as bit 31 of the QBus address.

This manual adopts the convention that the most significant bit is always the largest number. MPC860 designers must ensure that they connect their pins accordingly. For example, pin A[31] on the QSpan II connects to pin A[31] on the MC68360 bus, but connects to pin A[0] on the MPC860 bus. This applies to all MPC860 buses (D[31:0], AT[3:0], TSIZ[1:0]) not only the address bus.

The QSpan II's chip select inputs (CSREG_, CSPCI_) must not be asserted when the QSpan II is initiating a cycle on the QBus.

© 2019 Renesas Electronics Corporation

Table 18: Translation of PCI Bus Address to QBus Address

BS in PBTI0_CTL or PBTI1_CTL	Block Size	PCI Address Bits Translated	Translation Address Bits Copied
0000	64 Kbytes	AD31–AD16	TA31–TA16
0001	128 Kbytes	AD31–AD17	TA31–TA17
0010	256 Kbytes	AD31–AD18	TA31–TA18
0011	512 Kbytes	AD31–AD19	TA31–TA19
0100	1 Mbyte	AD31–AD20	TA31–TA20
0101	2 Mbytes	AD31–AD21	TA31–TA21
0110	4 Mbytes	AD31–AD22	TA31–TA22
0111	8 Mbytes	AD31–AD23	TA31–TA23
1000	16 Mbytes	AD31–AD24	TA31–TA24
1001	32 Mbytes	AD31–AD25	TA31–TA25
1010	64 Mbytes	AD31–AD26	TA31–TA26
1011	128 Mbytes	AD31–AD27	TA31–TA27
1100	256 Mbytes	AD31–AD28	TA31–TA28
1101	512 Mbytes	AD31–AD29	TA31–TA29
1110	1 Gbyte	AD31–AD30	TA31–TA30
1111	2 Gbytes	AD31	TA31

4.4.3 Transaction Codes on the QBus

The address supplied on the A[31:0] lines on the QBus is the result of the address translation described in the previous section. QSpan II also allows the user flexibly to generate various encodings on the QSpan II's TC[3:0] lines. The TC[3:0] lines can be connected to the FC[3:0] lines of the MC68360 bus, the AT[0:3] lines of the MPC860 bus, and a subset of the TT[1:0] and TM[2:0] lines of the M68040 bus. QSpan II copies the values from the TC field of the PCI Target Image of the current transaction to the TC[3:0] lines of the QBus. This gives the user additional control over the address information provided on the QBus.

© 2019 Renesas Electronics Corporation

4.4.4 PCI BIOS Memory Allocation

The PCI Target Image registers used by the QSpan II to decode PCI accesses work differently depending on the EEPROM implementation and the use of the PCI Access Disabled (PCI_DIS) bit in MISC_CTL2 (see Table 130 on page 278). There are three possible cases:

1. Case 1: The PCI_BSTx register is enabled by the EEPROM (see Table 75 on page 208 and Table 77 on page 210). For PCI Target Image 0, this means that bit 5 of byte 7 in the EEPROM is 1. For PCI Target Image 1, this means that bit 7 of byte 8 in the EEPROM is 1 (see Table 44 on page 125).
2. Case 2: The PCI_BSTx register is not enabled (see Table 75 on page 208 and Table 77 on page 210). For PCI Target Image 0, this means that bit 5 of byte 7 in the EEPROM is 0. For PCI Target Image 1, this means that bit 7 of byte 8 in the EEPROM is 0 (see Table 44 on page 125).
3. Case 3: By setting the power-up option, PCI_DIS, the QSpan II will retry all PCI accesses, and the QBus Host can program the registers and then clear the PCI_DIS bit in MISC_CTL2. Once cleared, this enables the PCI Host to read the Configuration registers.

4.4.4.1 Block Size and PCI Address Space

If PCI address programming from the EEPROM is enabled (Case 1), the Block Size and PCI Address Space (PAS) fields are set from the EEPROM, and they are read only. (The PAS bit can be read from either the PCI_BSTx or the PBTIx_CTL register.)

If the reset state of the Block Size and Address Space fields is zero (Case 2), these fields are only writable from the PBTIx_CTL registers.

4.4.4.2 Base Address

If PCI address information is loaded from an EEPROM (Case 1), the base address of the Target Image can only be set through the PCI_BSTx register (for example, BA[31:16] of PCI_BST0 or PCI_BST1). The base address can be read from either the PCI_BSTx register or the PBTIx_ADD register.

The PCI BIOS uses the PCI_BSTx registers to determine the address allocation for the QSpan II-based board. It does this by writing all 1s to the BA field of the PCI_BSTx register and then reading back from the same location. The number of bits in the BA field of the PCI_BSTx register that are writable is determined by the Target Image's block size (BS[3:0] field in the PBTIx_CTL register).

For example, if the PCI Target Image is programmed to a block size of 128 Mbytes, then the BS field in the PBTIx_CTL register has been programmed to all 1s (see Table 18 on page 64). This means that only the most significant five bits of the BA field of PCI_BSTx register are writable. When the BIOS reads back from the BA field in the PCI_BSTx register, the read returns only the most significant five bits of BA as 1, indicating a 128 Mbyte image size.

© 2019 Renesas Electronics Corporation

When PCI address information is not loaded from an EEPROM or initiated by the processor on the QBus; the base address can only be set through the PBTIx_ADD registers. The PBTIx_ADD registers do not support the image-sizing functionality described in the previous paragraph.

4.5 Data Phase

4.5.1 Endian Mapping

This section describes how the QSpan II translates cycles from the PCI bus to the QBus.

The PCI bus and Motorola processors differ in the way they order and address bytes. These differences are explained in Appendix E: “Endian Mapping” on page 389.

The PCI bus is always a Little-Endian environment. The QBus can be configured as Little-Endian or Big-Endian, depending on the value of the QBus Byte Ordering Control bit (QB_BOC) in the MISC_CTL register (see Table 127 on page 274). The default mode for the QBus is Big-Endian. This global ordering can be inverted on an image-by-image basis by programming the INVEND bit of the PBTIx_CTL register. QSpan II translates byte-lane ordering when the QBus is Big-Endian, while preserving the addressing of bytes.

When the QBus is Little-Endian — according to QB_BOC and INVEND — the QSpan II preserves byte-lane ordering, while translating the addressing of bytes. (The QB_BOC bit affects transactions in all channels whereas the INVEND bit only affects the PCI Target Channel.)

PCI bus transactions have the following characteristics:

- They can be translated as 32-bit, 16-bit, or 8-bit on the QBus.
- The data width of the QBus transaction is controlled by the DSIZE field of the PCI bus Target Image Control register.
  - — With 16-bit peripherals, they can be 8-bits or 16-bits wide.
  - — With 8-bit peripherals, they can be 8-bits wide.
- Packing and unpacking of data performed by the QBus Master Module is a function of byte-enables (BE[3:0]) and the port size.

4.5.1.1 Write Cycle Mapping for PCI Target Channel

This section describes write cycle mapping as a function of port size.

All tri-byte, misaligned and non-contiguous byte write operations on the PCI bus are performed as a series of 8-bit write operations on the QBus.

© 2019 Renesas Electronics Corporation

32-Bit QBus Port

Tables 19 and 20 describe write transfers of various sizes to 32-bit peripherals on the QBus.

The following table describes mapping of 8, 16, and 32-bit write transfers through the PCI Target Channel with the QBus set to Little-Endian. (The byte lane ordering is preserved in Little-Endian mode.)

Table 19: Little-Endian PCI Target Write Cycle Mapping — 32-Bit QBus Port

Transfer size	PCI bus		QBus		
	BE[3:0]#	D[31:0]	SIZ[1:0]	A[1:0]	D[31:0]
8 bits	0111	B3 xx xx xx	01	00	B3 xx xx xx
8 bits	1011	xx B2 xx xx	01	01	B2 B2 xx xx
8 bits	1101	xx xx B1 xx	01	10	B1 xx B1 xx
8 bits	1110	xx xx xx B0	01	11	B0 B0 xx B0
16 bits	0011	B3 B2 xx xx	10	00	B3 B2 xx xx
16 bits	1100	xx xx B1 B0	10	10	B1 B0 B1 B0
32 bits	0000	B3 B2 B1 B0	00	00	B3 B2 B1 B0

The following table describes mapping of 8, 16, and 32-bit write transfers through the PCI Target Channel in Big-Endian mode to 32-bit QBus peripherals. (The addressing of bytes is preserved in Big-Endian mode.)

Table 20: Big-Endian PCI Target Write Cycle Mapping — 32-Bit QBus Port

Transfer size	PCI bus		QBus		
	BE[3:0]#	D[31:0]	SIZ[1:0]	A[1:0]	D[31:0]
8 bits	1110	xx xx xx B0	01	00	B0 xx xx xx
8 bits	1101	xx xx B1 xx	01	01	B1 B1 xx xx
8 bits	1011	xx B2 xx xx	01	10	B2 xx B2 xx
8 bits	0111	B3 xx xx xx	01	11	B3 B3 xx B3
16 bits	1100	xx xx B1 B0	10	00	B0 B1 xx xx
16 bits	0011	B3 B2 xx xx	10	10	B2 B3 B2 B3
32 bits	0000	B3 B2 B1 B0	00	00	B0 B1 B2 B3

© 2019 Renesas Electronics Corporation

16-Bit QBus Port

16-bit QBus port transfers are explained in terms of the 32-bit transfers described in Tables 19 and 20. The first of these operations involves unpacking data.

- A 32-bit write operation to a QBus peripheral with a 16-bit QBus port size is performed as two 16-bit write operations to a 32-bit peripheral.
- A 16-bit write operation to a QBus peripheral with a 16-bit QBus port size is performed as a 16-bit write operation to a 32-bit peripheral.
- An 8-bit write operation to a QBus peripheral with a 16-bit QBus port size is performed as an 8-bit write operation to a 32-bit peripheral.

8-bit QBus port

8-bit QBus port transfers are explained in terms of the 32-bit transfers described in Tables 19 and 20. The first two operations involve unpacking data.

- A 32-bit write operation to a QBus peripheral with an 8-bit QBus port size is performed as four 8-bit write operations to a 32-bit peripheral.
- A 16-bit write operation to a QBus peripheral with an 8-bit QBus port size is performed as two 8-bit write operations to a 32-bit peripheral.
- An 8-bit write operation to a QBus peripheral with an 8-bit QBus port size is performed as an 8-bit write operation to a 32-bit peripheral.
- All tri-byte, misaligned and non-contiguous byte write operations are performed as a series of 8-bit write operations to a 32-bit peripheral.

4.5.1.2 Read Cycle Mapping for PCI Target Channel

This section describes cycle mapping and packing of data by the QBus Master Module.

32-bit QBus Port

Tables 21 and 22 describe transfers of various sizes to 32-bit peripherals.

© 2019 Renesas Electronics Corporation

The following table describes mapping of 8-bit, 16-bit, and 32-bit read transfers through the PCI Target Channel in Little-Endian mode to 32-bit QBus peripherals. The byte-lane ordering is preserved in Little-Endian mode.

Table 21: Little-Endian PCI Target Read Cycle Mapping — 32-Bit QBus Port

Transfer size	PCI bus		QBus		
	BE[3:0]#	D[31:0]	SIZ[1:0]	A[1:0]	D[31:0]
8 bits	0111	B3 xx xx xx	01	00	B3 xx xx xx
8 bits	1011	xx B2 xx xx	01	01	xx B2 xx xx
8 bits	1101	xx xx B1 xx	01	10	xx xx B1 xx
8 bits	1110	xx xx xx B0	01	11	xx xx xx B0
16 bits	0011	B3 B2 xx xx	10	00	B3 B2 xx xx
16 bits	1100	xx xx B1 B0	10	10	xx xx B1 B0
32 bits	0000	B3 B2 B1 B0	00	00	B3 B2 B1 B0

The following table describes mapping of 8-bit, 16-bit, and 32-bit read transfers through the PCI Target Channel in Big-Endian mode from 32-bit QBus peripherals. The addressing of bytes is preserved in Big-Endian mode.

Table 22: Big-Endian PCI Target Read Cycle Mapping — 32-Bit QBus Port

Transfer size	PCI bus		QBus		
	BE[3:0]#	D[31:0]	SIZ[1:0]	A[1:0]	D[31:0]
8 bits	1110	xx xx xx B0	01	00	B0 xx xx xx
8 bits	1101	xx xx B1 xx	01	01	xx B1 xx xx
8 bits	1011	xx B2 xx xx	01	10	xx xx B2 xx
8 bits	0111	B3 xx xx xx	01	11	xx xx xx B3
16 bits	1100	xx xx B1 B0	10	00	B0 B1 xx xx
16 bits	0011	B3 B2 xx xx	10	10	xx xx B2 B3
32 bits	0000	B3 B2 B1 B0	00	00	B0 B1 B2 B3

All tri-byte, misaligned and non-contiguous byte delayed read operations from a peripheral with a 32-bit QBus port size are performed as a series of 8-bit read operations would be from a 32-bit peripheral.

© 2019 Renesas Electronics Corporation

16-Bit QBus Port

Tables 23 and 24 describe 8-bit and 16-bit read transfers from 16-bit QBus peripherals.

The following table describes mapping of 8-bit and 16-bit read transfers through the PCI Target Channel in Little-Endian mode from 16-bit QBus peripherals. The byte lane ordering is preserved in Little-Endian mode.

Table 23: Little-Endian PCI Target Read Cycle Mapping — 16-Bit QBus Port

Transfer size	PCI bus		QBus		
	BE[3:0]#	D[31:0]	SIZ[1:0]	A[1:0]	D[31:0]
8 bits	0111	B3 xx xx xx	01	00	B3 xx xx xx
8 bits	1011	xx B2 xx xx	01	01	xx B2 xx xx
8 bits	1101	xx xx B1 xx	01	10	B1 xx xx xx
8 bits	1110	xx xx xx B0	01	11	xx B0 xx xx
16 bits	0011	B3 B2 xx xx	10	00	B3 B2 xx xx
16 bits	1100	xx xx B1 B0	10	10	B1 B0 xx xx

The following table describes mapping of 8-bit and 16-bit read transfers through the PCI Target Channel in Big-Endian mode from 16-bit QBus peripherals. The addressing of bytes is preserved in Big-Endian mode.

Table 24: Big-Endian PCI Target Read Cycle Mapping — 16-Bit QBus Port

Transfer size	PCI bus		QBus		
	BE[3:0]#	D[31:0]	SIZ[1:0]	A[1:0]	D[31:0]
8 bits	1110	xx xx xx B0	01	00	B0 xx xx xx
8 bits	1101	xx xx B1 xx	01	01	xx B1 xx xx
8 bits	1011	xx B2 xx xx	01	10	B2 xx xx xx
8 bits	0111	B3 xx xx xx	01	11	xx B3 xx xx
16 bits	1100	xx xx B1 B0	10	00	B0 B1 xx xx
16 bits	0011	B3 B2 xx xx	10	10	B2 B3 xx xx

All tri-byte, misaligned and non-contiguous byte read operations from a peripheral with a 16-bit QBus port size are performed like a series of 8-bit read operations from a 16-bit peripheral.

© 2019 Renesas Electronics Corporation

A 32-bit read operation from a peripheral with a 16-bit QBus port size is performed as two 16-bit read operations from a peripheral with a 16-bit QBus port size.

8-Bit QBus Port

The following table describes mapping of 8-bit read transfers through the PCI Target Channel in Little-Endian mode from 8-bit QBus peripherals. The byte-lane ordering is preserved in Little-Endian mode.

Table 25: Little-Endian PCI Target Read Cycle Mapping — 8-Bit QBus Port

Transfer size	PCI bus		QBus		
	BE[3:0]#	D[31:0]	SIZ[1:0]	A[1:0]	D[31:0]
8 bits	0111	B3 xx xx xx	01	00	B3 xx xx xx
8 bits	1011	xx B2 xx xx	01	01	B2 xx xx xx
8 bits	1101	xx xx B1 xx	01	10	B1 xx xx xx
8 bits	1110	xx xx xx B0	01	11	B0 xx xx xx

The following table describes mapping of 8-bit read transfers through the PCI Target Channel in Big-Endian mode from 8-bit QBus peripherals. The addressing of bytes is preserved in Big-Endian mode.

Table 26: Big-Endian PCI Target Read Cycle Mapping — 8-Bit QBus Port

Transfer size	PCI bus		QBus		
	BE[3:0]#	D[31:0]	SIZ[1:0]	A[1:0]	D[31:0]
8 bits	1110	xx xx xx B0	01	00	B0 xx xx xx
8 bits	1101	xx xx B1 xx	01	01	B1 xx xx xx
8 bits	1011	xx B2 xx xx	01	10	B2 xx xx xx
8 bits	0111	B3 xx xx xx	01	11	B3 xx xx xx

All tri-byte, misaligned and non-contiguous byte read operations from a peripheral with an 8-bit QBus port size are performed like a series of 8-bit read operations from an 8-bit peripheral.

A 32-bit read operation from a peripheral with an 8-bit QBus port size is performed as four 8-bit read operations from a peripheral with an 8-bit QBus port size.

A 16-bit read operation from a peripheral with an 8-bit QBus port size is performed as two 8-bit read operations from a peripheral with an 8-bit QBus port size.

© 2019 Renesas Electronics Corporation

4.5.2 Data Path

This section explains how data flows between the PCI bus and the QBus through the PCI Target Channel.

4.5.2.1 Posted Writes

If the Posted Write Enable (PWEN) bit in the Target Image is 1, writes to the PCI Target Module are posted into the Px-FIFO (see “Transaction Decoding” on page 59). If the bit is cleared, writes are treated as delayed transactions. The default setting for the PWEN bit is 0, which is delayed transactions.

Write transfers are stored in the Px-FIFO (see “Px-FIFO and Pr-FIFO” on page 57). Address and data are stored as separate entries in the Px-FIFO. For example, a single data transaction is stored as two entries in the Px-FIFO — one for the translated address and one for the data (see “Address Translation” on page 62). Any reprogramming of PCI Target Image attributes will only be reflected in Px-FIFO entries queued after the reprogramming. Transactions queued before the reprogramming are delivered to the PCI bus with the PCI Target Image attributes that were in use before the reprogramming.

QSpan II never packs data in the Px-FIFO. For example, two non-burst 16-bit data beats are not packed as a single 32-bit data entry but as four separate entries in the Px-FIFO (32-bit address, 16-bit data, 32-bit address, 16-bit data).

Acceptance of Burst Writes by the PCI Target Module

The PCI Target Module can accept burst write transactions from PCI bus Masters. This section explains the following about PCI burst writes: when PCI bursts are accepted, how they are stored, and how data is transferred on the QBus.

QSpan II will not accept a PCI burst write under the following conditions:

1. If posted writes for the selected Target Image are disabled (see Table 84 on page 217 or Table 92 on page 226), then each successive data phase is processed as a delayed single write. When the write completes on the QBus, the QSpan II issues a Target-Completion the next time the transfer is attempted by the external PCI master. Therefore, for each data phase in the burst, the external PCI master will see a series of retries and then one Target-Completion.
2. If the Px-FIFO fills while a burst is in progress, the PCI Target Module generates a Target-Disconnect.
3. If there are fewer data entries available in the Px-FIFO than specified by the cacheline — CLINE[1:0] field of the PCI_MISC0 register — and a PCI master attempts a new burst to the QSpan II, the external PCI master is retried.
4. The PCI Target Module only accepts linear burst address incrementing. Any transfers requiring other addressing modes are disconnected after the first data phase.

For more information, see “Terminations driven by the PCI Target Module” on page 80.

© 2019 Renesas Electronics Corporation

The Px-FIFO stores the address and data entries of PCI bursts. For example, if a burst of four is received by the PCI Target Module, the QSpan II stores the burst as five new entries of the following types: address, data, data, data, data. Because the QBus Master Module can write data at the same time as the PCI Target Module accepts data, the Px-FIFO might not contain these five entries by the end of the burst — some of the data may already have been written to the QBus before the burst completes on the PCI bus.

Bursting on the QBus

If the Burst Write Enable (BRSTWREN) bit of the selected PCI Target Image is 1, the QSpan II will burst data from the Px-FIFO onto the QBus. When enabled, all byte-lanes are assumed to be active for data written to the image. Generation of burst writes is only supported while in MPC860 Master mode (see Table 15 on page 57).

Burst length on the QBus is controlled by the BDIP_ signal: by negating BDIP_ the QSpan II signals the QBus slave that the current data beat is the second last beat of the transaction. This allows the QSpan II to perform bursts of two, three, or four data beats. QSpan II can be programmed to generate a burst of four data beats to be compatible with the MPC860's memory controller (UPM). This can be completed by setting the QBus Burst Four Dataphases (BURST_4) bit in the MISC_CTL2 register (see Table 130 on page 278).

If the write transfer is not cacheline aligned, then the QSpan II will perform single writes up until a cacheline boundary. Similarly, if a PCI write transaction completes, the QSpan II will perform single write cycles for the entries that remained in the Px-FIFO at a non-cacheline aligned address.

The KEEP_BB bit in the MISC_CTL2 register (see Table 130 on page 278) is not supported for DMA operation. As such, do not set this bit when the QSpan II DMA channel is used with the PowerQUICC memory controller (UPM).

4.5.2.2 Delayed Writes

If a write is attempted when posted writes are disabled for the PCI Target Image (PWEN is set to 0), or the address space bit is set to 1 (for I/O transfers), then write cycles are treated as delayed transactions. During a delayed write transaction the PCI master is retried until the transaction completes on the QBus. If the PCI transaction completes normally on the QBus, then when the PCI bus master retries the same transaction — qualified by the latched address and command information — the original PCI master is given a normal cycle termination. If the QBus transaction does not complete normally, then the appropriate termination is communicated back to the PCI master (see "Terminations" on page 78).

© 2019 Renesas Electronics Corporation

4.5.2.3 Single Read Transactions

When the QSpan II receives a target read request, it latches the address and C/BE# information and retries the PCI master. QSpan II then becomes QBus master and initiates a read on the QBus. The external PCI master is retried until the read is completed on the QBus. When the external PCI master retries the same transaction — qualified by the latched information — it is provided with the data and the transaction terminates normally on the PCI bus. If the QBus transaction does not complete normally, then the appropriate termination is communicated back to the PCI bus master (see “Terminations” on page 78).

4.5.2.4 Prefetched Read Transactions

QSpan II supports different prefetch data amounts based on the PCI target image accessed during a read of the PCI Target Channel. QSpan II initiates a prefetch read transaction on the QBus if the following conditions are met:

1. The PREN bit in the selected Target Image must be 1.
2. The Prefetch Read Byte Count (PRCNT[5:0]) bit in the MISC_CTLx register must be programmed. The PRCNT2[5:0] and PTP_IB bits in the MISC_CTL2 register can also be programmed to enable image-based prefetching (see Table 130 on page 278).
3. The PCI master must keep FRAME# asserted when IRDY# is asserted (for example, PCI burst read cycle).

QSpan II will read the amount of data specified in the appropriate PRCNTx[5:0] field of the MISC_CTLx register (see Table 127 on page 274 and Table 130 on page 278). QSpan II retries the PCI master until read data is available in the Pr-FIFO.

If the PREN bit is cleared, which is the default setting, the transfer is processed as a delayed single read (see “Single Read Transactions” on page 74). QSpan II will prefetch whether it is in MC68360, MPC860, or M68040 Master mode (see “QBus Master Module” on page 57). However, it will only prefetch with burst reads on the QBus when it is MPC860 Master mode. If the external QBus slave does not support bursting, setting the QBus Prefetch Signal Dataphase (PR_SING) bit will cause the QSpan II to prefetch in MPC860 mode using only single reads.

If a read-request is not cacheline aligned, then the QSpan II will perform single beat transactions on the MPC860 bus until it reaches a cacheline boundary. The QBus Master Module, as MPC860 master, only performs burst reads at cacheline boundaries. This feature makes QSpan II burst reads compatible with the MPC860 UPM. The module requests the bus for a burst when there is enough room in the Pr-FIFO for an entire cacheline of data.

The PR_SING bit in the MISC_CTL2 register supports QSpan II prefetching as single or burst cycles in the PCI Target Channel. The PR_SING bit should be set to a 1 if the QBus memory does not support bursting when the QSpan II is powered up as an MPC860 master (see Table 130 on page 278).

© 2019 Renesas Electronics Corporation

4.5.3 Parity Monitoring by PCI Target Module

The PCI Target Module monitors parity during the address phase of transactions and during the data phase of write transfers. For example, the QSpan II compares the PAR signal with the parity of AD[31:0] and C/BE[3:0]. The PAR signal provides even parity for C/BE#[3:0] and AD[31:0]. QSpan II drives PAR when it provides data as a target during a read.

If the PCI Target Module detects an address or data parity error during a write, it sets the Detected Parity Error (D_PE) bit in the PCI_CS register (see Table 70 on page 201) regardless of the PERESP setting in the PCI_CS register. For more information about parity errors and the D_PE bit, see “Parity Monitoring by PCI Master Module” on page 50. If the QSpan II signals SERR#, it sets the S_SERR bit in the PCI_CS register.

Address parity errors are reported if Parity Error Response (PERESP) and SERR# Enable (SERR_EN) are set in the PCI_CS register (see Table 70 on page 201). Address parity errors are reported by the QSpan II by asserting the SERR# signal and setting the S_SERR (signaled SERR#) bit in the PCI_CS register. Assertion of SERR# can be disabled by clearing the SERR_EN bit in the PCI_CS register. An interrupt may be generated, and regardless of whether assertion of SERR# is enabled or not, the QSpan II does not respond to the access with DEVSEL#. Normally, the master of the transaction terminates the cycle with a Master-Abort.

The PERESP bit in the PCI_CS register affects how the QSpan II responds to PCI parity errors. If the PERESP bit and the SERR_EN bit are set, the QSpan II reports address parity errors by asserting SERR# and setting the S_SERR bit in the PCI_CS register. If the PERESP bit is set the QSpan II reports data parity errors (during writes) by asserting PERR#.

4.6 Reads and PCI Transaction Ordering

PCI Transaction Ordering rules affect the relationship between delayed reads in the PCI Target Channel and posted writes in the PCI Target Channel. These rules also affect the relation between delayed reads in the PCI Target Channel and posted writes in the QBus Slave Channel.

When a read request is latched, the PCI Target Module retries non-register accesses to the PCI Target Module until the read completes on the QBus. Once the read completes on the QBus, the QSpan II ensures that all writes previously posted in the Qx-FIFO complete on the PCI bus before the read data is passed back to the PCI bus master that initiated the read transaction. During the period when the Qx-FIFO is being emptied, attempts to access the QBus Slave Channel are retried (register accesses are not affected).

The following list summarizes the sequence of events:

1. The PCI Target Module receives a read request from a PCI master, which it latches.
2. The PCI Target Module retries all non-register accesses.
3. The PCI Target Channel empties the Px-FIFO.

© 2019 Renesas Electronics Corporation

4. The QBus Master Module completes the read on the QBus.
5. The QBus Slave Module retries all non-register accesses.
6. The Qx-FIFO is emptied.
7. The PCI Target Module allows the read to complete on the PCI bus.
8. The PCI Target Module allows posted writes to the Px-FIFO, even if the delayed read has not completed.
9. The QBus Slave Module allows posted writes to the Qx-FIFO.

Similar principles apply to QBus Slave Channel reads (see “Delayed Reads and PCI Transaction Ordering” on page 49). The IDMA Channel is independent from the PCI transaction ordering rules that affect the QBus Slave Channel and the PCI Target Channel.

4.6.1 Transaction Ordering Disable Option

QSpan II has a register option to disable transaction ordering between the PCI Target Channel and the QBus Slave Channel. The No Transaction Ordering (NOTO) bit in MISC_CTL2 register is used for this purpose (see “MISC_CTL2 Description” on page 278). When this bit is set, a read in one channel is unaffected by posted writes in the other channel. This feature improves system performance, especially when using the DMA and where strict transaction ordering is not required.

4.7 QBus Arbitration and Sampling

The QBus Master Module requests the QBus when there is a read request or when there is a sufficient number of entries in the Px-FIFO (see “Acceptance of Burst Writes by the PCI Target Module” on page 72).

4.7.1 MC68360 Bus Arbitration

When the QSpan II requires control of the MC68360 bus, it requests the bus by asserting Bus Request (BR_). When the QSpan II samples Bus Grant (BG_) asserted and Bus Grant Acknowledge (BB_/BGACK_) negated, the QSpan II asserts BB_/BGACK_ and negates BR_.

The QBus (MC68360) Master Module’s default arbitration mode is asynchronous: it double-samples the BG_ and BB_/BGACK_ inputs using the falling and rising edge of QCLK. The default mode of operation can be modified with the QSpan II in order to save one clock cycle during arbitration. To enable synchronous arbitration, set the Synchronous Bus Grant (S_BG) bit and the Synchronous Bus Grant Acknowledge (S_BB) bit to 1 in the MISC_CTL register (see Table 127 on page 274). The Arbitration Synchronous Timing Mode (ASTM) bit in the MC68360 must be set for asynchronous mode of operation by setting the ASTM bit to 0 in the MCR register.

© 2019 Renesas Electronics Corporation

QSpan II can operate synchronously because all timing parameters can be met by the MC68360. However, the MC68360 must be programmed for asynchronous mode in order for the QSpan II to meet the MC68360's input setup requirements. See Appendix B: "Timing" on page 299 for the arbitration timing waveform.

If the MC68360's processing core is disabled (Companion mode, Slave mode) an external arbiter must be implemented to support arbitration between the MC68360 and the QSpan II (for more information, see Appendix C: "Typical Applications" on page 359).

QSpan II can hold onto the QBus for multiple transactions if the KEEP_BB bit is set in the MISC_CTL2 register (see Table 130 on page 278). If set, this configuration improves the performance of the PCI Target Channel and the DMA Channel by eliminating the arbitration delay.

4.7.2 MPC860 Bus Arbitration

When the QSpan II requires control of the MPC860 bus, it arbitrates for the bus by asserting BR_. When the QSpan II samples BG_ asserted and BB_/BGACK_ negated, the QSpan II asserts BB_/BGACK_ and negates BR_.

QSpan II asserts BB_ one clock after BG_ in accordance with MPC860 arbitration requirements.

The MPC860 Master Module's default arbitration mode is synchronous. This default mode can be overridden by setting S_BG and S_BB to 0 in the MISC_CTL register (see Table 127 on page 274). Note that, except for termination signals with an MC68360, and for arbitration, the QBus is always synchronous. See Appendix B: "Timing" on page 299 for the arbitration timing waveform.

QSpan II can hold onto the QBus for multiple transactions if the KEEP_BB bit is set in the MISC_CTL2 register (see Table 130 on page 278). If set, this configuration improves the performance of the PCI Target Channel by eliminating the arbitration delay.

The KEEP_BB bit in the MISC_CTL2 register (see Table 130 on page 278) is not supported for DMA operation. As such, do not set this bit when the QSpan II DMA channel is used with the PowerQUICC memory controller (UPM).

© 2019 Renesas Electronics Corporation

4.7.3 M68040 Bus Arbitration

When the QSpan II requires control of the M68040 bus, it arbitrates for the bus by asserting BR_. When the QSpan II samples BG_ asserted and BB_/BGACK_ negated, the QSpan II asserts BB_/BGACK_ and negates BR_.

The M68040 Master Module's default operation is synchronous. This default mode can be overridden by setting S_BG and S_BB to 0 in the MISC_CTL register (see Table 127 on page 274). Note that, except for termination signals with an MC68360 and arbitration, the QBus is always synchronous. See Appendix B: "Timing" on page 299 for the arbitration timing waveform.

QSpan II can hold onto the QBus for multiple transactions if the KEEP_BB bit is set in the MISC_CTL2 register (see Table 130 on page 278). If set, this configuration improves the performance of the PCI Target Channel and the DMA Channel by eliminating the arbitration delay.

4.8 Terminations

4.8.1 QBus Master Module Terminations

This section explains the QBus Master Module's handling of cycle termination for the MC68360, MPC860 and M68040 buses.

4.8.2 MC68360 Cycle Terminations

When a transaction is completed, BB_/BGACK_ is negated by the QBus Master Module on the rising clock edge and tristated on the next falling clock edge. Termination of MC68360 cycles is described in Table 27. The QBus Master Module samples all of the MC68360 termination signals on the falling edge of QCLK. In contrast, the QBus Master Module samples the MPC860 termination signals on the rising edge of QCLK.

The MC68360 termination inputs to the QBus Master Module can be skewed by as much as one clock period. However, they must meet the required setup and hold time required with respect to the falling edge of QCLK. HALT_/TRETRY_ is ignored if asserted alone. In a Normal and Halt condition, the QBus Master Module delays the termination until HALT_/TRETRY_ is negated. This feature of the MC68360 allows software to verify the internal state of the MC68360 during an error. During MC68360 Retry terminations the QBus master negates BB_/BGACK_, and will re-request the bus (assert BR_) when HALT_/TRETRY_ is negated.

© 2019 Renesas Electronics Corporation

Table 27: MC68360 Cycle Terminations of QBus Master Module

Termination Type	DSACK0_, DSACK1_/TA_		BERR_/TEA_		HALT_/TRETRY_	
	t_0	t_1	t_0	t_1	t_0	t_1
Normal	Asserted	Asserted	Negated	Negated	Negated	Don't Care
Normal & Halt[a]	Asserted	Asserted	Negated	Negated	Asserted	Asserted
Bus Error	Don't Care Don't Care	Don't Care Don't Care	Asserted Negated	Asserted Asserted	Negated Negated	Negated Negated
Retry	Don't Care Don't Care	Don't Care Don't Care	Asserted Negated	Asserted Asserted	Don't Care Don't Care	Asserted Asserted
t_0: First sample on falling edge of QCLK t_1: Second sample on falling edge of QCLK						

a. QSpan II as QBus master will sample DSACKx 2 QCLK rising edges after HALT negation.

4.8.3 MPC860 Cycle Terminations

When MPC860 transfers are completed, BB_/BGACK_ is negated by the QBus Master Module on the rising clock edge and tristated on the next falling clock edge to terminate the transaction currently in progress (see Table 28).

Table 28: MPC860 Cycle Terminations of QBus Master Module

Termination Type	DSACK1_/TA_	BERR_/TEA_	HALT_/TRETRY_
Normal	Asserted	Negated	Don't Care
Bus Error	Don't Care	Asserted	Don't Care
Retry	Negated	Negated	Asserted

4.8.4 M68040 Cycle Terminations

When M68040 transfers are completed, BB_/BGACK_ is negated by the QBus Master Module on the rising clock edge and tristated on the next falling clock edge (see Table 29).

Table 29: M68040 Cycle Terminations of QBus Master Module

Termination Type	DSACK1_/TA_	BERR_/TEA_
Normal	Asserted	Negated
Bus Error	Negated	Asserted
Retry	Asserted	Asserted

© 2019 Renesas Electronics Corporation

4.8.5 Terminations driven by the PCI Target Module

This section lists the terminations generated by the PCI Target Module, and summarizes the conditions under which the various terminations are issued.

Under most conditions, the target is able to source or sink the data requested by the master until the master terminates the transaction. But when the target is unable to complete the request, it can use the STOP# signal to initiate termination of the transaction.

QSpan II PCI Target Module generates the following PCI terminations:

- Target-Disconnect
- Target-Retry
- Target-Abort

4.8.5.1 Target-Disconnect

During a Target-Disconnect, a termination is requested by the target because it is unable to respond within the latency requirements of the *PCI 2.2 Specification*, or it requires a new address phase. This termination is signaled when the target holds TRDY# and STOP# asserted. Target-Disconnect means that the transaction is terminated after data is transferred. Target-Disconnects can be issued by the QSpan II under the following conditions:

- A PCI master attempts to burst to a Target Image whose transfers are set to I/O space. In this case, a target-disconnect is issued after the first data phase.
- A PCI master attempts to burst to a Target Image with posted writes disabled and the current data phase — processed as a delayed write — has completed on the QBus (see “Acceptance of Burst Writes by the PCI Target Module” on page 72).
- A PCI master has attempted a burst read and the QBus Master Module has completed the single transfer.
- A 128 byte boundary is reached.
- The Px-FIFO fills during a burst write.
- A burst transfer requiring non-linear burst address incrementing is attempted.
- TRDY# is negated for eight PCLKs during a PCI burst read. This is optional (for more information, see “PCI Target Prefetch Disconnect” on page 80).

PCI Target Prefetch Disconnect

QSpan II can be programmed to perform a Target-Disconnect while completing prefetch reads in the PCI Target Channel. To enable this feature, set the PCI Target Channel Prefetch Disconnect (PTC_PD) bit in the MISC_CTL2 register (see Table 130 on page 278).

A disconnect is issued if the TRDY# signal is negated for eight PCI clock cycles during a target prefetch read transaction. A new prefetch is started on the QBus when the master continues the disconnected read.

© 2019 Renesas Electronics Corporation

4.8.5.2 Target-Retry

During a Target-Retry, a termination is requested by the target because it cannot currently process the transaction. This termination is communicated by the target asserting STOP# while not asserting TRDY#. Target-Retry means that the transaction is terminated after the address phase without any data transfer. The PCI Target Module retries accesses under the following conditions:

- An external PCI bus master attempts to post a single write or the first phase of a burst write and the Px-FIFO does not have the number of data entries free that are specified by the cacheline (CLINE[1:0] in the PCI_MISC0 register). This Target-Retry only occurs if the PWEN bit is set to 1.
- A delayed transaction is in progress in the PCI Target Channel.
- A burst read is requested but the ensuing read has not terminated on the QBus.
- A PCI bus master attempts a write through the PCI Target Channel while a read is in progress (in either the QBus Slave Channel or the PCI Target Channel) and that read has not completed on the read-destination bus (for example, the PCI bus or the QBus, respectively) For more information, see “Reads and PCI Transaction Ordering” on page 75.

4.8.5.3 Target-Abort

During a Target-Abort, a termination is issued by a target for a transaction which it can not respond to, or during which a fatal error occurred. This is signaled by the target asserting STOP# and negating DEVSEL#. Although there may be a fatal error for the initiating application, the transaction completes gracefully, ensuring normal PCI operation for other PCI resources.

Except during posted writes (see “Terminations of Posted Writes” on page 82), the termination generated by the PCI Target Module is determined by the termination on the QBus. For read transactions and delayed write transactions, the master is retried until the QBus transaction is complete. Once the QBus transaction is complete, the PCI bus master receives a translated version of the QBus termination.

The following table shows how QBus terminations are translated to the PCI bus in the case of delayed transactions. As this table shows, the PCI Target Module generates a Target-Abort when a delayed transfer results in a bus error on the QBus.

© 2019 Renesas Electronics Corporation

Table 30: Translation of Cycle Termination[a] from QBus to PCI Bus

QBus Termination Received	PCI Bus Termination Issued
Normal	Master-Completion
Bus Error	Target-Abort
Retry	None [b]

a. This table applies to read transactions and delayed write transactions.

b. This cycle is not translated. The PCI Target Module retries the PCI bus master during delayed transactions until the QBus Master Module receives a normal termination or a bus error.

4.8.6 Terminations of Posted Writes

PCI bus terminations of posted writes are not influenced by QBus terminations. If a posted write leads to a bus error on the QBus, this termination is not signalled on the PCI bus to the PCI bus master. However, errors on the QBus are accessible to PCI Masters through error logging registers (if error logging is enabled by the EN bit of the QB_ERRCS register). QBus errors can be configured as a source of interrupts.

If the EN bit in the QB_ERRCS register (see Table 147 on page 291) is set, then the QSpan II records the address, transaction code, data, and size of a posted write transaction that results in a bus error. In this case, an error is indicated by the ES bit of the QB_ERRCS register. Transfers in the PCI Target Channel are suspended until the ES bit is cleared. The QB_ERRCS register also records the TC and SIZ information of the transaction error. The address of the transaction error is latched in the QB_AERR register (see Table 148 on page 292). The data of the transaction error is latched in the QB_DERR register (see Table 149 on page 293).

If error logging is enabled and the PCI Target Channel is errored, the Px-FIFO is frozen until the ES bit in the QB_ERRCS register is cleared. Posted write operation continues with the next enqueued posted write once the ES bit of the QB_ERRCS is cleared. However, if error logging is not enabled and the PCI Target Channel is errored, the errored transfer is lost and posted write operation continues with the next enqueued transfer.

An interrupt is generated upon the logging of an error (ES bit in QB_ERRCS) only if the QEL_EN bit in INT_CTL register is set (see Table 120 on page 263). If generated, the interrupt is directed to the QBus or the PCI bus, depending on the QEL_DIR bit in the INT_DIR register (see Table 121 on page 266). Interrupts are described in Chapter 8: “The Interrupt Channel” on page 113.

© 2019 Renesas Electronics Corporation

Chapter 5: The IDMA Channel

This chapter describes the QSpan II's IDMA Channel. The following topics are discussed:

- "PCI Read Transactions" on page 85
- "PCI Write Transactions" on page 87
- "TC[3:0] Encoding with MPC860 IDMA" on page 88
- "IDMA Status Tracking" on page 89
- "IDMA Errors, Resets, and Interrupts" on page 89
- "IDMA Endian Issues" on page 91

5.1 Overview

QSpan II can operate as a QBus IDMA peripheral or a DMA master for data transfers between the QBus and the PCI bus (see Figure 7). For transfers going to or from the PCI bus, software can perform bulk data movement using the QSpan II's IDMA or DMA Channel. The IDMA Channel supports single-address and dual-address cycles, and fast-termination.

IDT recommends using the DMA Channel instead of the IDMA Channel because it supports higher rates of data transfer between the PCI bus and the QBus.

© 2019 Renesas Electronics Corporation

Figure 7: IDMA Channel — Functional Diagram

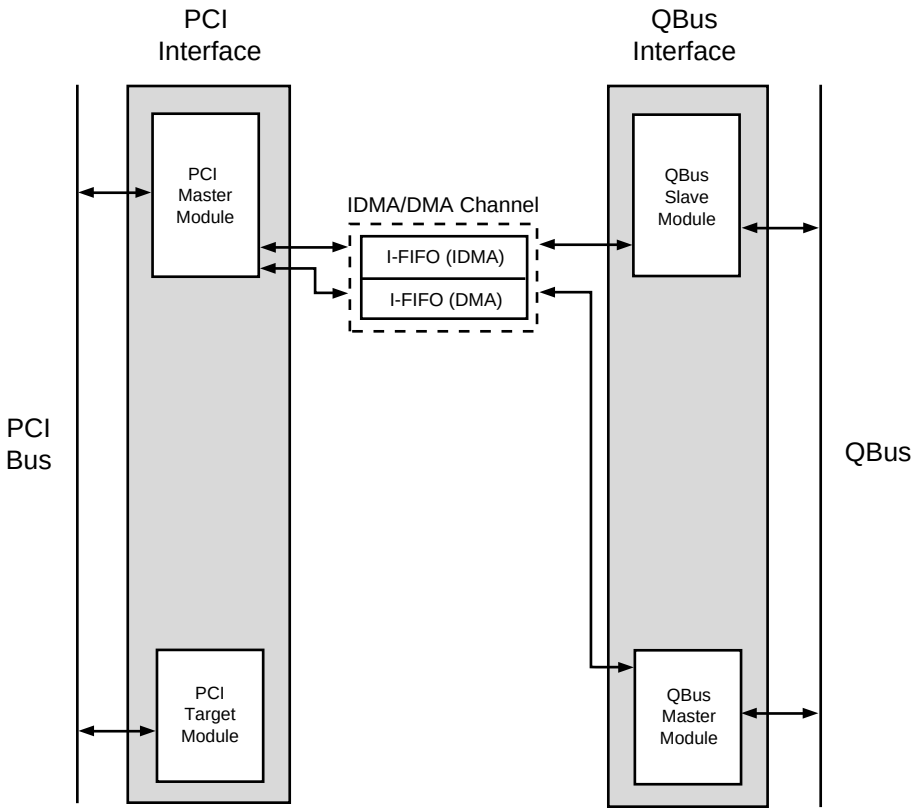

The IDMA Channel contains a bi-directional 256-byte (64-entry deep) FIFO called I-FIFO. IDMA transactions are initiated on the QBus. The IDMA Channel can only access PCI Memory space — it cannot access I/O or Configuration space. The QBus Slave Module accepts IDMA read and write transfers of 16 or 32 bits. The MPC860's IDMA must be programmed for level-sensitive mode with the QSpan II; edge-sensitive mode is not supported.

When programmed to perform writes to the PCI bus, the QSpan II requests transfers from the processor's IDMA on the QBus. Once the processor's IDMA is requested for write data, it loads posted writes into the I-FIFO. When sufficient data is available in the I-FIFO, the QSpan II requests the PCI bus and begins bursting data to the PCI target. This process continues until the number of transfers programmed in the QSpan II's IDMA/DMA Transfer Count register completes (see Table 111 on page 250).

When programmed to perform IDMA transfers from the PCI bus to the QBus, the QSpan II reads data from a PCI target and loads the data into the I-FIFO. As the I-FIFO fills, the QSpan II requests the processor's IDMA to transfer data from the QSpan II to the destination on the QBus. The processor's IDMA then transfers data from the QSpan II's I-FIFO until the number of transfers programmed into the QSpan II's IDMA registers completes, or the QSpan II signals to the processor's IDMA that there is no additional data in the I-FIFO.

© 2019 Renesas Electronics Corporation

QSpan II can be programmed to operate as a QBus IDMA peripheral. Although the QBus Master and Slave mode is determined at reset, this does not affect the QBus Slave Module which dynamically accepts MC68360 (QUICC) or MPC860 (PowerQUICC) IDMA cycles. The following list defines the IDMA Channel's features:

- The IDMA Mode (IMODE) bit of the IDMA/DMA_CS register (see Table 109 on page 246) must be set to indicate whether or not the IDMA Channel functions as an MC68360 or an MPC860 IDMA peripheral.
- QSpan II only supports level-sensitive handshaking with the MPC860.
- QSpan II supports single-address and dual-address IDMA transfers.
- QSpan II determines the type of IDMA transfer by detecting the state of the CSPCI_ pin when the IDMA cycle begins.

  If CSPCI_ is negated when AS_ (MC68360 applications) or TS_ (MPC860 applications) is asserted, then single-address mode is selected. CSPCI_ must be detected asserted when the cycle begins in order to use dual-address IDMA transfer mode. This requires that the address programmed in the MPC860's or MC68360's buffer pointer register cause the QSpan's CSPCI_ chip select to be activated. QSpan II does not latch the address off the QBus during dual-address IDMA transfers.

5.2 PCI Read Transactions

This section describes the operation and programming of the QSpan II to move data from the PCI bus to the QBus using the processor's IDMA. The IDMA registers within the QSpan II need to be programmed for a read transaction as follows:

- The direction of the transfer must be set for reads. To do this, set the IDMA Direction (DIR) bit to 0 in the IDMA/DMA_CS register (see Table 109 on page 246). The IDMA Channel can operate in one direction at a time.
- The QBus Port 16 (PORT16) bit of the IDMA/DMA_CS register indicates whether IDMA transfers will be 16 or 32-bit on the QBus (see Table 109 on page 246).
- MC68360 users can indicate whether fast termination mode is to be used for dual-address or single-address IDMA cycle (bits QTERM and STERM in the IDMA/DMA_CS register; see Table 109 on page 246).
- The Programmable I-FIFO Watermark (IWM) field controls the burst read length on the PCI bus if it is set to a non-zero value (see Table 113 on page 252). If IWM equals 0, then the QSpan II PCI burst read length equals the CLINE setting (see Table 113 on page 252).
- The CLINE[1:0] field of the PCI_MISC0 register (see Table 72 on page 205) determines how much data is read by the PCI Master Module (either four or eight 32-bit transfers within a burst read if the IWM is set to zero).
- The IDMA/DMA_PADD register contains the absolute PCI address for an IDMA transaction (see Table 110 on page 249). This address is aligned to a 4-byte boundary (A1 and A0 always equal 0). If an IDMA transfer is required to cross an A24 boundary, it must be programmed as two separate transactions.

© 2019 Renesas Electronics Corporation

- The CMD bit in the IDMA/DMA_CS register determines whether the read transaction on PCI proceeds as a Memory Read Line transaction or a Memory Read Multiple transaction (see Table 109 on page 246).
- The IDMA/DMA_CNT register must be programmed to indicate the amount of data to transfer (see Table 111 on page 250).

The MC68360's IDMA count register and the QSpan II's IDMA/DMA_CNT register must be programmed with the same value.

Once all the relevant data is programmed into the IDMA register, the IDMA/DMA Go (GO) bit in the IDMA/DMA_CS register must be set to 1 to initiate the IDMA transfer. Any status bit (IRST, DONE, IPE, or IDE) affected by a previous transfer must be cleared prior to or while the GO bit is set.

5.2.1 Data Path

The PCI Master Module performs burst reads on the PCI bus to fill the I-FIFO. When data is available in the I-FIFO, the QSpan II asserts DREQ_ to request IDMA service. The processor acknowledges with DACK_/SDACK_, at which point the QSpan II drives the data onto the QBus. With a 16-bit QBus port, the QSpan II unpacks each 32-bit read data from the PCI into two 16-bit transfers on the QBus.

The IDMA/DMA_CNT register indicates the number of bytes to transfer in an IDMA transaction (see Table 111 on page 250). QSpan II decreases the transfer count by four with every 32-bit transfer on the PCI bus: the IDMA Channel on the PCI Interface only transfers 32-bit data. The maximum amount of data that can be transferred within an IDMA transaction is 16 Mbytes (for example, 2^{22} 32-bit transfers). QSpan II can prefetch data up to the next cacheline boundary and discard the extra data.

When the IDMA/DMA_CNT expires, the QSpan II sets the IDMA/DMA Done Status (DONE) bit in the IDMA/DMA_CS register. The MC68360 IDMA asserts the DONE_ signal when its transfer counter expires. If the MC68360 is programmed with a larger transfer count than the QSpan II, the QSpan II will prematurely assert the DONE bit. If this happens, the MC68360 must reprogram the QSpan II's IDMA/DMA_CNT register to complete the remainder of the transaction. If the MC68360 is programmed with a smaller transfer count than the QSpan II, the MC68360 will assert the DONE_ signal when its IDMA count reaches zero, causing the QSpan II to negate DREQ_. The MC68360 will then have to assert the IDMA/DMA Reset Request (IRST_REQ) bit in the IDMA/DMA_CS register to reset the QSpan II's IDMA Channel.

During MPC860 IDMA transfers, the QSpan II ignores the DONE_ signal.

© 2019 Renesas Electronics Corporation

5.3 PCI Write Transactions

This section describes the operation and programming of the QSpan II to move data from the QBus to the PCI bus using the MC68360 or MPC860 IDMA. IDMA registers need to be programmed for a write transaction as follows:

- The direction of the transfer must be set for writes (DIR bit in the IDMA/DMA_CS register set to 1; see Table 109 on page 246). The IDMA Channel operates in one direction at a time.
- MC68360 users can indicate whether fast termination mode is used for dual-address or single-address IDMA cycle (bits QTERM and STERM in the IDMA/DMA_CS register; see Table 109 on page 246).
- The PORT16 bit of the IDMA/DMA_CS indicates whether IDMA transfers will be 16-bit or 32-bit on the QBus (see Table 109 on page 246).
- The IWM field of the IDMA/DMA_CS register determines when the QSpan II will begin to burst the data onto the PCI bus (Table 109 on page 246). Once the I-FIFO contents equal IWM, the QSpan II burst writes up to the values of IWM - throttled only by the PCI target. The IWM must not be programmed with a value greater than the IDMA transfer byte count.
- The CLINE[1:0] field of the PCI_MISC0 register determines the length of the burst writes initiated by the PCI Master Module (see Table 72 on page 205). The burst writes are either four or eight 32-bit transfers if the IWM bit is set to zero.
- The IDMA/DMA_PADD register (see Table 110 on page 249) contains the absolute PCI address for an IDMA transaction. This number is aligned to a 4-byte boundary. An IDMA transfer wraps-around at the A24 boundary. If an IDMA transfer is required to cross an A24 boundary, it must be programmed as two separate transactions. The IWM must not be programmed with a value greater than the IDMA transfer byte count.
- The IDMA/DMA_CNT register indicates the number of bytes to transfer in an IDMA transaction (see Table 111 on page 250).
- The CMD bit in the IDMA/DMA_CS register determines whether the write transaction on PCI proceeds as a Memory Write Invalidate or a Memory Write transfer (see Table 109 on page 246).

Once all the relevant data is programmed in the IDMA register, the GO bit in the IDMA/DMA_CS register must be set to 1 to initiate the IDMA transfer. Any status bit (IRST, DONE, IPE, or IQE) affected by a previous transfer must be cleared prior to or while the GO bit is set.

5.3.1 Data Path

QSpan II requests data from the IDMA by asserting DREQ_. By asserting DACK_/SDACK_, the IDMA acknowledges that data is being written to the I-FIFO. With a 16-bit QBus port, the QSpan II packs two 16-bit transfers from the QBus into one 32-bit entry in the I-FIFO. When the I-FIFO is full the QSpan II negates DREQ_.

© 2019 Renesas Electronics Corporation

QSpan II requests the PCI bus when there is as much data in the I-FIFO as is specified by the IWM field of the IDMA/DMA_CS register (if the IWM equals 0, the QSpan II requests the PCI bus when a cacheline is queued in the I-FIFO). QSpan II burst writes data to the PCI target.

The IDMA/DMA_CNT register indicates the number of bytes to transfer in an IDMA transaction (see Table 111 on page 250). QSpan II decreases the transfer count by four with every 32-bit transfer on the PCI bus; the IDMA Channel on the PCI Interface transfers 32-bit data. The amount of data that can be transferred within an IDMA transaction is 16 Mbytes (for example, 2^{22} 32-bit transfers).

When the IDMA/DMA_CNT expires, the QSpan II sets the DONE bit in the IDMA/DMA_CS register. The MC68360 IDMA asserts the DONE_ signal when its transfer counter expires. If the MC68360 is programmed with a larger transfer count than the QSpan II, the QSpan II will prematurely assert the DONE bit. This will require the MC68360 to reprogram the QSpan II's IDMA/DMA_CNT register in order to complete the remainder of the transaction. If the MC68360 is programmed with a smaller transfer count than the QSpan II, the MC68360 will assert the DONE_ signal when its IDMA count reached zero, causing the QSpan II to negate DREQ_. The MC68360 must then assert the IRST_REQ bit in the IDMA/DMA_CS register to reset the QSpan II's IDMA Channel.

During MPC860 IDMA transfers, the QSpan II ignores the DONE_ signal.

5.4 TC[3:0] Encoding with MPC860 IDMA

If the MPC860's I/O Port pins are being shared between multiple functions (for example, IDMA and Ethernet) then the TC[3:0] decoding must be implemented. This allows peripheral devices (QSpan II or Ethernet devices) to determine when they are involved in a transaction.

QSpan II's TC[3:0] inputs can be used with SDACK_ to decode IDMA transactions. The value that is decoded is programmed by the user through the TC[3:0] field in the IDMA/DMA_CS register. QSpan II will decode the TC[3:0] lines for IDMA transactions if the TC Encoding Enable (TC_EN) bit in the IDMA/DMA_CS register is set to 1. If the TC_EN bit is set and an IDMA transfer is attempted where the TC[3:0] input does not match the TC[3:0] IDMA/DMA_CS field, the QSpan II will not accept the IDMA transaction.

This manual adopts the convention that the most significant bit is always the largest number. MPC860 designers must ensure that they connect their pins accordingly. For example, pin A[31] on the QSpan II connects to pin A[31] on the MC68360 bus, but connects to pin A[0] on the MPC860 bus. This applies to all MPC860 buses (D[31:0], AT[3:0], TSIZ[1:0]) not only the address bus.

© 2019 Renesas Electronics Corporation

5.5 IDMA Status Tracking

The following bits in the IDMA/DMA_CS register record the status of the transaction:

- The IDMA/DMA Active Status (ACT) bit in the IDMA/DMA_CS is set by the QSpan II to indicate that an IDMA transfer is in progress.
- The IDMA/DMA Done Status (DONE) bit indicates that the IDMA transfer is complete.
- The IDMA/DMA PCI Bus Error Status (IPE) bit is asserted when an error is signaled on the PCI bus during an IDMA transfer.
- The IDMA/DMA QBus Error Status (IQE) bit is asserted when an error is signaled on the QBus during an IDMA transfer.
- The IDMA/DMA Reset Status (IRST) bit is asserted when the QSpan II has reset the IDMA Channel.

For more information about errors and resets, see “IDMA Errors, Resets, and Interrupts” on page 89.

5.6 IDMA Errors, Resets, and Interrupts

This section describes how the QSpan II responds to PCI bus errors and QBus errors during IDMA reads and writes. This section also discusses IDMA resets and interrupts.

When there is an error on either bus during IDMA transfers, the QSpan II will assert an IDMA error status bit. If the error is on the PCI bus, then the IPE bit in the IDMA/DMA_CS register is set (see Table 109 on page 246). If the error is on the QBus, then the IQE bit is set. How the transfer proceeds following the error depends on whether the transfer is a read or a write, and on what bus the error occurred. Table 31 summarizes the sequence of events following bus errors for each of these four cases.

If a QBus bus error occurs during an IDMA write transfer, the QSpan II continues to write data until the IWM level is reached. This is possible because the QSpan only initiates PCI activity once the IWM value is queued in the I-FIFO. Once the IWM amount is transferred, the QSpan responds to the bus error on the QBus as indicated in the following table.

The assertion of IRST, IPE, IQE and DONE can be mapped to the interrupt pins on either bus using the QSpan II’s Interrupt Control Register (bits IRST_EN, IPE_EN, IQE_EN and DONE_EN, see Table 120 on page 263). The bus that is interrupted depends on the Interrupt Direction Register INT_DIR (see Table 121 on page 266). The status of the individual interrupt sources can be determined by reading the corresponding status bit (see Table 42 on page 116 and Table 119 on page 260). To clear the interrupt, the original interrupt source must be cleared. For example, to clear the IDMA Reset Interrupt, the IRST bit in the IDMA/DMA_CS register must be cleared (see Table 109 on page 246). The following table is extracted from Chapter 8: “The Interrupt Channel” on page 113.

© 2019 Renesas Electronics Corporation

Table 31: QSpan II's Response to IDMA Errors

PCI Bus Transfer	PCI Bus Error	QBus Error
Read	**Prefetching stops.** IPE is set in the IDMA/DMA_CS register. Then the QSpan II negates DREQ_. If enabled, an interrupt is generated on the PCI bus or the QBus.	**QSpan II negates DREQ_.** Transfers on QBus stop. IQE is set in the IDMA/DMA_CS register. If enabled, an interrupt is generated on the PCI bus or the QBus. Prefetching stops when the current IDMA PCI transfer (if any) is complete.
Write	**PCI writes from I-FIFO are halted.** IPE is set in the IDMA/DMA_CS register. If enabled, an interrupt is generated on the PCI bus or the QBus. The QSpan II negates DREQ_.	**QSpan II negates DREQ_.** IQE is set in the IDMA/DMA_CS register. If enabled, an interrupt is generated on the PCI bus or the QBus. If a PCI transfer from the I-FIFO is in progress, any complete CLINE of data in the I-FIFO is transferred to the PCI target. (See the following section)

Table 32: IDMA Interrupt Source, Enabling, Mapping, Status and Clear bits

Source	Source Bits IDMA/DMA_CS (Table 109 on page 246) Write 1 to clear	Enable Bits INT_CTL (Table 120 on page 263)	Mapping Bits INT_DIR (Table 121 on page 266)	Interrupt Status Bits INT_STAT (Table 119 on page 260)
IDMA QBus Error	IQE in IDMA/DMA_CS	IQE_EN	IQE_DIR	IQE_IS
IDMA PCI Bus Error	IPE in IDMA/DMA_CS	IPE_EN	IPE_DIR	IPE_IS
IDMA Reset	IRST in IDMA/DMA_CS	IRST_EN	IRST_DIR	IRST_IS
IDMA Done	DONE in IDMA/DMA_CS	DONE_EN	DONE_DIR	DONE_IS

© 2019 Renesas Electronics Corporation

An IDMA transfer that is halted due to an IDMA error (IPE or IQE asserted), will not resume once the error condition is cleared. The IDMA Channel needs to be reset by setting the IRST_REQ bit of the IDMA/DMA_CS (see Table 109 on page 246). The IRST status bit is set when the QSpan II has reset the IDMA Channel. Then a new IDMA transfer can be programmed (either from where the error happened or the previous transfer can be attempted again). The QBus Slave Channel is not affected by IDMA Channel errors.

The IDMA Channel can be reset by setting the IRST_REQ bit in the IDMA/DMA_CS register, depending on the value of the ACT bit in the IDMA/DMA_CS register (see Table 109 on page 246). If the ACT bit is 0, then setting IRST_REQ to 1 has no effect. If the ACT bit is 1, then setting the IRST_REQ bit has the following effects:

1. QSpan II negates DREQ_, which halts transfers on the QBus.
2. If the QSpan II is writing IDMA data on the PCI bus, the QSpan II will terminate the transfer by negating FRAME# at the next cacheline; if the QSpan II is reading data, FRAME# is negated immediately.
3. QSpan II flushes the I-FIFO (after negating FRAME#).
4. The ACT bit in the IDMA/DMA_CS register is set to 0 while the IRST bit is set to 1 (see Table 109 on page 246). Note that the IDMA/DMA_PADD register, the IDMA/DMA_CNT register and the rest of the IDMA/DMA_CS register are not reset.
5. If enabled, an interrupt is generated on the QBus or the PCI bus (see Chapter 8: “The Interrupt Channel” on page 113).

5.7 IDMA Endian Issues

The PCI bus and Motorola processors differ in the way they order and address bytes. These differences are explained in Appendix A: “Registers” on page 193. This section describes how the QSpan II translates cycles from the QBus to the PCI bus in the IDMA Channel.

The PCI bus is always a Little-Endian environment. The QBus can be configured as Little-Endian or Big-Endian, depending on the value of the QBus Byte Ordering Control bit (QB_BOC) in the MISC_CTL register (see Table 127 on page 274). The default mode for the QBus is Big-Endian. QSpan II translates byte-lane ordering when the QBus is Big-Endian, while preserving the addressing of bytes. When the QBus is Little-Endian (according to QB_BOC), the QSpan II preserves byte-lane ordering, while translating the addressing of bytes. Note that the QB_BOC bit affects transactions in all channels.

Table 33 describes mapping of 16-bit QBus transactions in Little-Endian mode. The byte lane ordering is preserved in Little-Endian mode. During a read transaction, a full 32-bit PCI transaction is unpacked into two 16-bit QBus transfers. During a write transaction, two 16-bit QBus transactions are packed into the I-FIFO for one PCI transfer. The table also shows the order in which the 16-bit QBus cycles appear.

© 2019 Renesas Electronics Corporation

Table 33: 16-Bit Little Endian IDMA Cycle Mapping

	QBus			PCI bus	
QBus Timing	**SIZ[1:0]**	**A[1:0]**	**D[31:0]**	**BE[3:0]#**	**D[31:0]**
First 16-bit transfer:	10	00	B3 B2 xx xx	**Full 32-bit PCI bus Transfer**	
Second 16-bit transfer:	10	10	B1 B0 xx xx	0000	B3 B2 B1 B0

The following table describes mapping of 16-bit QBus transactions in Big-Endian mode. The addressing of bytes is preserved in Big-Endian mode. During a read transaction, a full 32-bit PCI transaction is unpacked into two 16-bit QBus transfers. During a write transaction, two 16-bit QBus transactions are packed into the I-FIFO for one PCI transfer. The table also shows the order in which the 16-bit QBus cycles appear.

Table 34: 16-Bit Big-Endian IDMA Cycle Mapping

	QBus			PCI bus	
QBus Timing	**SIZ[1:0]**	**A[1:0]**	**D[31:0]**	**BE[3:0]#**	**D[31:0]**
First 16-bit transfer:	10	00	B0 B1 xx xx	**Full 32-bit PCI bus Transfer**	
Second 16-bit transfer:	10	10	B2 B3 xx xx	0000	B3 B2 B1 B0

The following table describes mapping of 32-bit QBus transactions in Little-Endian mode. The byte lane ordering is preserved in Little-Endian mode.

Table 35: 32-Bit Little-Endian IDMA Cycle Mapping

QBus			PCI bus	
SIZ[1:0]	**A[1:0]**	**D[31:0]**	**BE[3:0]#**	**D[31:0]**
00	00	B3 B2 B1 B0	0000	B3 B2 B1 B0

The following table describes mapping of 32-bit QBus transactions in Big-Endian mode. The addressing of bytes is preserved in Big-Endian mode.

Table 36: 32-Bit Big-Endian IDMA Cycle Mapping

QBus			PCI bus	
SIZ[1:0]	**A[1:0]**	**D[31:0]**	**BE[3:0]#**	**D[31:0]**
00	00	B0 B1 B2 B3	0000	B3 B2 B1 B0

© 2019 Renesas Electronics Corporation

Chapter 6: The DMA Channel

This chapter examines the function of the QSpan II's DMA Channel. The following topics are discussed:

- "DMA Registers" on page 95
- "Direct Mode DMA Operation" on page 97
- "Linked List Mode DMA Operation" on page 98

6.1 Overview

QSpan II has a DMA Channel for high performance data transfer between the PCI bus and the QBus (see Figure 8). The DMA Channel functions similarly to the IDMA Channel in that it uses the existing IDMA registers (and some additional registers), and shares the 256-byte I-FIFO with the IDMA Channel. Because of the shared FIFO, the QSpan II cannot use its IDMA and DMA Channels at the same time.

IDT recommends using the DMA Channel over the IDMA Channel because it supports higher rates of data transfer between the PCI bus and the QBus.

© 2019 Renesas Electronics Corporation

Figure 8: DMA Channel — Functional Diagram

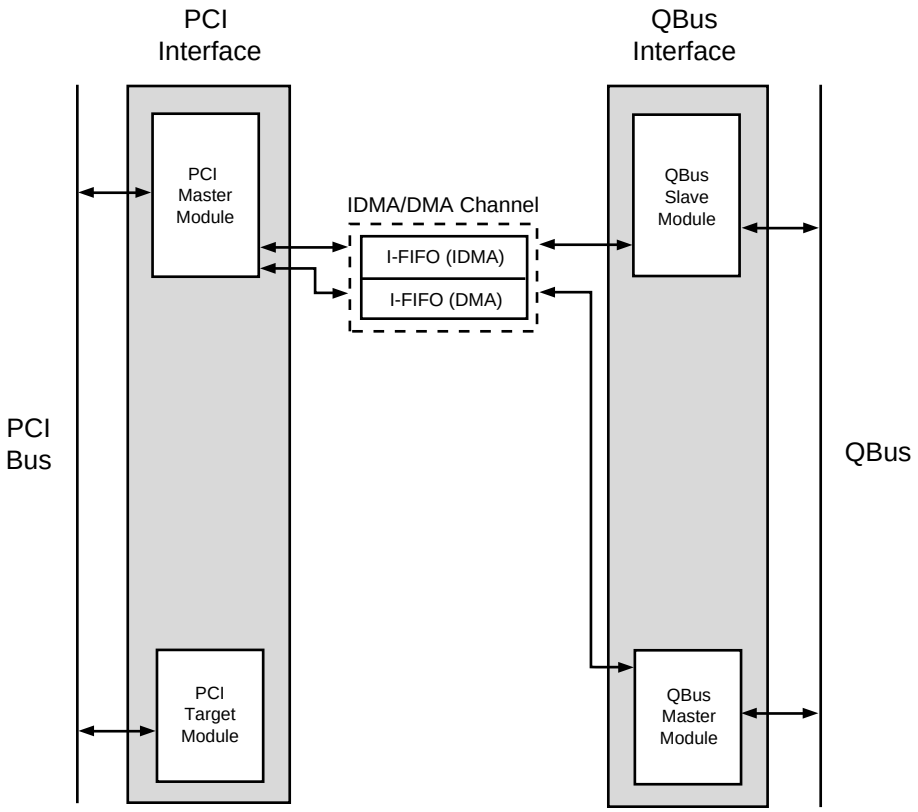

There are two modes of operation for the DMA Channel: Direct Mode and Linked List Mode (also called Scatter/Gather mode). In Direct Mode, the DMA registers are programmed directly by an external master. In Linked List Mode, the DMA registers are loaded from PCI Bus memory or QBus memory by the QSpan II. This allows the QSpan II to follow a list of buffer descriptors established by the local controller or the system host.

A block of DMA register contents stored in memory is called a Command Packet. A command packet can be linked to another command packet. When the DMA has completed the operations described by one command packet, it automatically moves to the next command packet in the Linked List of command packets. A command packet cannot initiate an IDMA transfer; it can only initiate a DMA transfer.

© 2019 Renesas Electronics Corporation

6.2 DMA Registers

The DMA Channel uses the IDMA registers (starting at Register offset 400), as well as three additional registers: DMA_QADD (see Table 112 on page 251), DMA_CS (see Table 113 on page 252) and DMA_CPP (see Table 114 on page 255).

The PCI address for the DMA transfer resides in IDMA/DMA Address Register (IDMA/DMA_PADD). The QBus address for the DMA transfer resides in DMA QBus Address Register (DMA_QADD). The PCI and QBus addresses are aligned to a four-byte boundary. If a DMA transfer is required to cross an A24 boundary, it must be programmed as two separate transactions.

The IDMA/DMA Transfer Count Register (IDMA/DMA_CNT) contains the number of bytes to be transferred during the DMA transfer (see Table 111 on page 250). The minimum value for the transfer count is 16 bytes, and it must be a multiple of four bytes.

The DMA Command Packet Pointer (DMA_CPP) points to a 16-byte aligned address location. This location is in QBus memory or PCI bus memory that contains the command packet to be loaded for Linked List DMA.

Some of the register bits in the IDMA/DMA Control and Status (IDMA/DMA_CS) register are used by the DMA Channel. The following bits are not used by the DMA Channel because they are only used during IDMA transfers:

- IWM
- TC
- TC_EN
- IMODE
- QTERM
- STERM
- PORT16

The IDMA/DMA_CS register uses two additional bits to support a DMA transfer: DMA, which indicates a DMA transfer is requested; and CHAIN, which indicates a Linked List DMA transfer is requested. All other register bits have the same function in a DMA transfer as in an IDMA transfer.

An additional register, DMA Control and Status Register (DMA_CS) defines other fields to control the QBus transaction generated by the QSpan II during DMA transfers. QSpan II generates DMA transfers on the QBus as an MC68360 (QUICC) master, as an MPC860 (PowerQUICC) master, or as an M68040 master, depending on the QBus Master mode selected at reset (MSTSLV field in MISC_CTL). The QBus master only generates burst cycles as an MPC860 master. The Transaction Code (TC) field determines the transaction code generated on the QBus during a DMA transfer. The INVEND bit inverts the endian setting of the QB_BOC setting in MISC_CTL. The QBus Destination Size (DSIZE) determines the destination port size of the external QBus slave.

© 2019 Renesas Electronics Corporation

The three fields described in the previous paragraph are similar to the fields of the same name in PCI Target Image registers (PBTIx_CTL). The IWM field controls the burst size on PCI. If the IWM is set to zero, the burst length stored in the CLINE field, which is stored in the PCI_MISC0 register, is used. The maximum burst size on PCI during DMA transfers is 128 bytes.

The QBus OFF (Q_OFF) timer, which is set in the DMA_CS register (see Table 113 on page 252), limits the DMA Channel's access to the QBus during DMA transfers. For large DMA transfers, set this field to a non-zero value to allow the PCI Target Channel regular access to the QSpan II's QBus master. Depending on the value programmed in the Q_OFF field, the DMA Channel will not request the QBus for the programmed number of QBus clocks when the DMA transfer on the QBus crosses the following: any 256-byte address boundary, or a 64-byte boundary, depending on the setting of Maximum DMA Burst Size on QBus (MDBS) bit in the DMA_CS register (see Table 113 on page 252).

To temporarily stop a DMA transfer in order to free up PCI bus or QBus bandwidth, the DMA Stop (STOP) bit in DMA_CS can be set (see Table 113 on page 252). The DMA transfer is stopped once any active DMA transfers are completed. Once the DMA is stopped on the PCI and QBus, the STOP_STAT bit is set in DMA_CS. To restart a stopped DMA transfer, the STOP bit must be cleared by writing a zero to the STOP bit. The DMA Channel restarts from where it stopped once the STOP bit is cleared and the Q_OFF counter has expired; if this function is enabled.

The Command Packet Location (CP_LOC) field is used during Linked List mode operation to determine if the command packets reside in QBus memory or PCI Bus memory. All the command packets in a Linked List must reside in QBus memory or PCI Bus memory, but not in both.

6.2.1 Burst Cycles

The BURST_4 field in DMA_CS enables the QSpan II to generate burst cycles with four dataphases on the QBus. This allows the QSpan II to work with the UPM of the MPC860. For DMA transfers that begin at an address that is not 16-byte aligned, the QSpan II generates single QBus cycles until a 16-byte boundary is reached and then performs burst cycles. For DMA write transfers to the QBus which end at an address that is not 16-byte aligned, the QSpan II generates single write cycles to finish the transfer. For DMA read transfers on the QBus which end at an address not 16-byte aligned, the QSpan II generates a burst cycle to the next 16-byte boundary (for example, prefetch data up to the next cacheline boundary), and discards the extra data.

The Burst Enable (BRSTEN) field in IDMA/DMA_CS disables QBus burst cycles during DMA transfers when the QSpan II is MPC860 master. This allows the QSpan II to operate in systems where the MPC860 is used with local memory that does not support bursting.

© 2019 Renesas Electronics Corporation

The KEEP_BB bit in the MISC_CTL2 register (see Table 130 on page 278) is not supported for DMA operation. As such, do not set this bit when the QSpan II DMA channel is used with the PowerQUICC memory controller (UPM).

6.2.2 DMA Cycles on QBus

QSpan II can limit the number of single reads and writes performed on the QBus to service the DMA. QSpan II can complete a maximum of 16 single cycles or 16 burst cycles. If the QBus OFF timer in the DMA_CS register is set, the OFF timer becomes effective on every 64-byte boundary when completing single cycles on the QBus, and on every 256-byte boundary when completing burst cycles (see Table 113 on page 252).

QSpan II can also limit the number of clocks a DMA burst cycle is active on the QBus. If this option is set through the MDBS bit in the DMA_CS register, it forces the QSpan II to perform four burst cycles (64 bytes) at a time on the QBus (see Table 113 on page 252). This allows the PCI Target Channel or an external QBus master to access the QBus with lower latency. In this case, the QBus OFF timer becomes effective on every 64-byte boundary.

6.3 Direct Mode DMA Operation

When operated in Direct Mode, the DMA is initiated by programming the QSpan II's registers. The following fields in the listed registers must be set to the appropriate values:

- IDMA/DMA_CS (see Table 109 on page 246): CMD, DMA, CHAIN, DIR
- DMA_CS (see Table 113 on page 252): TC, DSIZE, INVEND, IWM, Q_OFF, BURST_4, BRSTEN, MDBS
- IDMA/DMA_PADD (see Table 110 on page 249): ADDR (PCI address)
- DMA_QADD (see Table 112 on page 251): Q_ADDR (QBus address)
- IDMA/DMA_CNT (see Table 111 on page 250): CNT (Transfer count)

Interrupts can be produced by enabling the appropriate bits in the INT_CTL and INT_DIR registers. Interrupts can be generated to indicate the following:

- the completion of the DMA
- the occurrence of PCI bus or QBus errors

6.3.1 Initiating a Direct Mode Transfer

Once all relevant data is programmed, set the GO bit in the IDMA/DMA_CS register to 1 to initiate the direct mode DMA transfer (see Table 109 on page 246). Any status bit, such as IRST, DONE, IPE or IQE, set by a previous transfer must be cleared prior to, or when the GO bit is set.

© 2019 Renesas Electronics Corporation

QSpan II initiates read transfers on the source bus to fill the I-FIFO. Once data is available in the I-FIFO the destination bus master drains the data from the I-FIFO. The IWM field in DMA_CS register determines the amount of data transferred on the PCI bus for each DMA transaction initiated by the PCI Master Module.

The IDMA/DMA_CNT register indicates the number of bytes left to transfer in the DMA transaction. QSpan II decreases this transfer counter by four for every 32-bit transfer on the PCI bus. The maximum amount of data that can be transferred using the DMA is 16 Mbytes.

6.3.2 Terminating a Direct Mode Transfer

The completion of the DMA is signaled by an interrupt or is determined by polling the DONE bit in IDMA/DMA_CS. While the DMA transfer is active, the ACT bit in IDMA/DMA_CS is set. Any writes to the IDMA/DMA registers when the DMA is active are ignored, except for the IRST_REQ bit in IDMA/DMA_CS and the STOP bit in DMA_CS.

The DMA transfer can be terminated by setting the IDMA/DMA Reset Request (IRST_REQ) bit in the IDMA/DMA_CS register to 1. When the DMA transfer is terminated with IRST_REQ, the IRST status bit is set in IDMA/DMA_CS once the DMA Channel finishes any active transfer. An interrupt can also be generated by the IRST status bit.

If a QBus or PCI error (Master-Abort or Target-Abort) is encountered during a DMA transfer, the DMA transaction is terminated and the IQE or IPE status bits are set in IDMA/DMA_CS.

6.4 Linked List Mode DMA Operation

Linked List mode allows the DMA Channel to transfer a series of non-contiguous blocks of data without software intervention (see Figure 9 on page 99). Each entry in the Linked List is described by a command packet containing data for the QSpan II's DMA registers. The data structure for each command packet is the same, and contains the necessary information to program the DMA address and control registers. Each command packet is a record of four 32-bit data elements, for a total of 16 bytes. The command packets must be aligned to a 16-byte address boundary.

The fourth word of data in the command packet contains the next command packet pointer (DMA_CPP). The least significant bit (NULL bit) of the fourth command packet word contains control information for the Linked List processing.

The NULL bit indicates the termination of the entire Linked List. If the NULL bit is set to 0, the DMA processes the next command packet pointed to by the command packet pointer. If the NULL bit is set to 1, then this command packet is considered to be the last command packet in the Linked List, and the DMA stops at the completion of the transfer described by this command packet. The DONE bit in IDMA/DMA_CS is set upon the completion of the final command packet.

© 2019 Renesas Electronics Corporation

Figure 9: Linked List DMA Operation

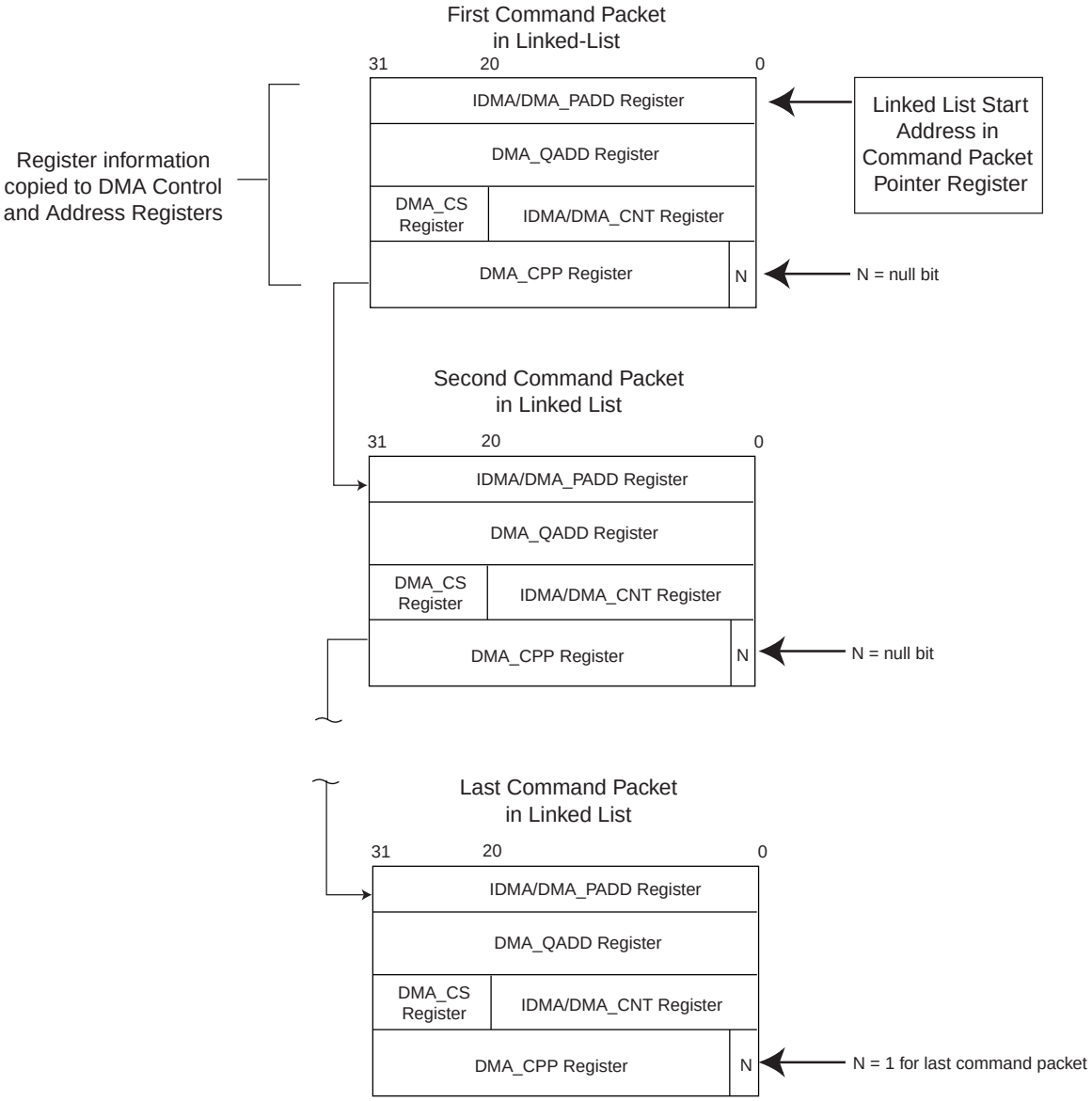

The maximum data transfer size for a Linked List DMA is 1 Mbyte because only CNT[19:2] bits are loaded from the command packet.

© 2019 Renesas Electronics Corporation

6.4.1 Initiating a Linked List Mode DMA Operation

To initiate a Linked List Mode DMA, the command packets described in the previous section must be set up in QBus memory or PCI bus memory. The final command packet must have the NULL bit set to 1. The following fields in the DMA_CS register (see Table 113 on page 252) must be programmed to the appropriate values:

- IWM, Q_OFF
- BURST_4
- BRSTEN
- CP_LOC
- MDBS
- TC
- DSIZE
- INVEND

The DMA_CPP must be programmed to point to the first command packet. The following fields in the IDMA/DMA_CS register (see Table 109 on page 246) must be programmed to the appropriate values:

- CMD
- DMA
- CHAIN

To enable an interrupt upon the completion of the Linked List DMA or due to PCI bus or QBus errors, the appropriate bits must be set in the INT_CTL and INT_DIR registers.

Once all relevant data is programmed, the GO bit in the IDMA/DMA_CS register must be set to 1 to initiate the Linked List DMA transfer. Any status bit (IRST, DONE, IPE or IQE) set by a previous transfer must be cleared prior to, or when the GO bit is set.

The Linked List DMA Channel ignores the setting of IDMA/DMA_PADD, DMA_QADD and IDMA/DMA_CNT, when the DMA bit and CHAIN bit are set to 1 in IDMA/DMA_CS. It uses the DMA_CPP and CP_LOC to read the first command packet from either QBus or PCI bus memory. If it reads the command packets from the QBus, it saves the setting of TC, DSIZE and INVEND fields in the DMA_CS register at the start of the Linked List DMA, and uses these values on subsequent loading of the command packets. The command packet may change the values of these fields in DMA_CS for the DMA transfer initiated by that command packet.

The following registers are updated from the contents of the command packet:

- IDMA/DMA_PADD[31:2]
- DMA_QADD[31:2]
- DMA_CS[31:20]

© 2019 Renesas Electronics Corporation

- IDMA/DMA_CNT[19:2]
- DMA_CPP[31:4]

The DMA Channel then starts the DMA transfer described by the command packet.

The command packet pointer register (DMA_CPP) points to the next command packet, and not to the command packet that is being executed. At the completion of the current command packet, the next command packet is loaded and the sequence continues until a command packet with the NULL bit set to 1 is loaded.

Once the software has set the GO bit, the software can monitor Linked List DMA completion by either waiting for the generation of an interrupt, or by polling for the DONE status bit in IDMA/DMA_CS. To determine the current command packet being executed, the software can read the DMA_CPP register to determine whether the command packet previous to this is being executed. The software can also read the IDMA/DMA_CNT register to determine the amount of data that is left to be transferred in the current command packet.

If the Linked List is set up in a circular queue — where each packet points to the next in the list and the last points to the first, and the software wants the DMA Channel to skip over some of the command packets — the software can set the transfer count in the command packet (bits [19:0] of the third element) to 0. When the DMA Channel reads a command packet that has a transfer count of 0, it reads and processes the next command packet.

If the CP_LOC is set to 1 — when the Linked List DMA Channel reads the next command packet from the QBus memory — it reads it in a single 16-byte burst if BRSTEN in DMA_CS is set to 1. Otherwise it takes four single reads to load the command packet. If a QBus error is encountered while reading the command packet, the Linked List DMA is terminated and the IQE status bit in IDMA/DMA_CS is set. If a QBus or PCI bus error is encountered while a DMA transfer described by the command packet is in progress, the Linked List DMA is terminated and the appropriate status bit (IQE or IPE) is set in the IDMA/DMA_CS register.

If the CP_LOC is set to 0, the DMA Channel reads the command packet from PCI memory using a burst read cycle. If a PCI error is encountered during this read, the Linked List DMA is terminated and the IPE status bit in IDMA/DMA_CS is set.

© 2019 Renesas Electronics Corporation

6.4.2 Terminating a Linked List Mode DMA Operation

To terminate a Linked List DMA operation, set the IRST_REQ bit to 1. In this case, the Linked List DMA is terminated and the IRST status bit is set in the IDMA/DMA_CS register once the DMA Channel finishes any active transfers.

The STOP bit in DMA_CS can temporarily stop the Linked List DMA. This can be used to free up PCI bus or QBus bandwidth for time-sensitive data transfers. Any updates to the command packets can be completed before the STOP bit is cleared and the Linked List DMA is resumed. The STOP_STAT bit in DMA_CS indicates when the DMA Channel is stopped. At this point any updates to the command packets in memory can be finished.

The ACT bit in IDMA/DMA_CS is still set when the DMA is temporarily stopped. The ACT bit is cleared when the Linked List DMA is completed, an IRST_REQ is generated, or a bus error on PCI bus or QBus is encountered.

© 2019 Renesas Electronics Corporation

Chapter 7: The Register Channel

This chapter describes the QSpan II's Register Channel. The following topics are discussed:

- "Register Access Fairness" on page 104
- "Register Access from the PCI Bus" on page 105
- "Register Access from the QBus" on page 107
- "Register Access Synchronization" on page 111
- "Mailbox Registers" on page 112

7.1 Overview

QSpan II provides 4 Kbytes of QSpan II Control and Status Registers (QCSRs). These registers program PCI settings and the QSpan II's operating parameters (see Figure 10). The QCSRs consist of two functional groups: the PCI Configuration Registers and the QSpan II Device Specific Registers (see Figure 11 on page 105). QCSR space is accessible from the PCI bus and the QBus.

Since QSpan II registers can be accessed from either the PCI bus or the QBus, an internal arbitration occurs to indicate ownership. The access mechanisms for the QCSRs, including the arbitration protocol, differ depending on whether the registers are accessed from the PCI bus or the QBus. An internal pointer selects which bus can access the registers. Default ownership of the Register Channel is granted to the QSpan II's PCI Target Module. When ownership of the Register Channel is granted to the QBus Slave Module, register accesses from the PCI bus are retried.

© 2019 Renesas Electronics Corporation

Figure 10: Register Channel — Functional Diagram

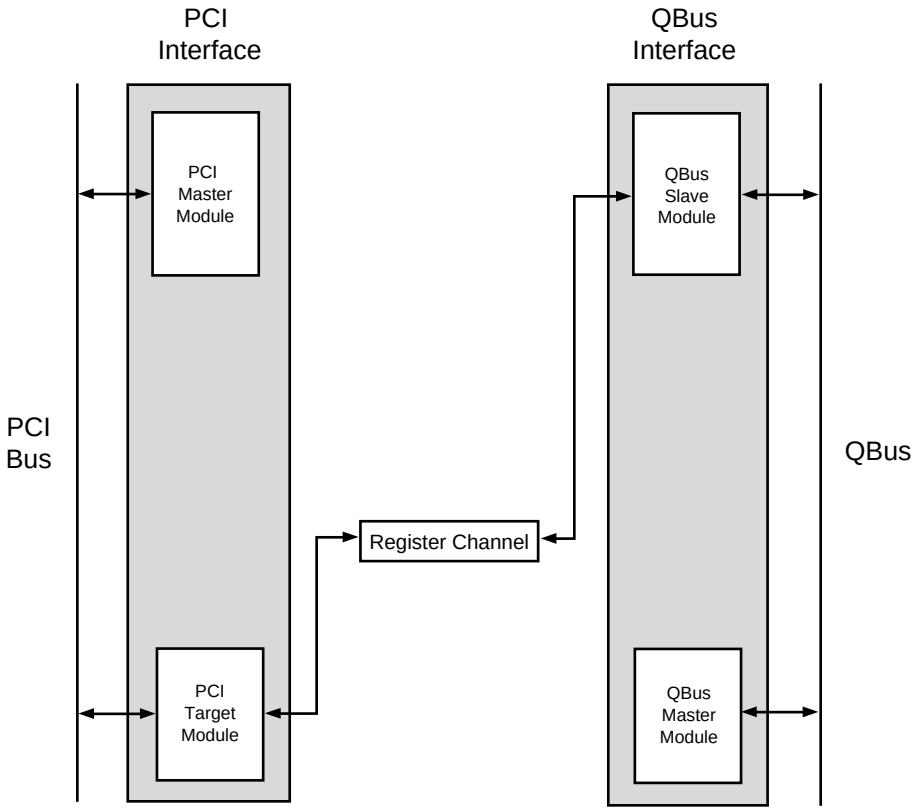

7.2 Register Access Fairness

QSpan II can be configured to make register access fairer by setting the Register Access Control (REG_AC) bit in MISC_CTL2 (see Table 130 on page 278). If this bit is set, the register access port is parked at the bus that completed the last register access. For example, if there was a QBus register access, then the register access port defaults to the QBus. Any additional QBus register access receives an immediate response while a PCI register access gets retried first, and then succeeds when the register access port switches to the PCI bus.

If register access is performed mainly from the QBus, set the REG_AC bit in the MISC_CTL2 register (see Table 130 on page 278).

© 2019 Renesas Electronics Corporation

7.3 Register Access from the PCI Bus

The QCSRs can be accessed through Configuration cycles or in Memory space (see the following figure). These accesses are discussed in the following sections.

Default ownership of the Register Channel is granted to the PCI Target Module. If an external master on the PCI bus attempts to access the registers of the QSpan II, and the ownership has been granted to the QBus Slave Module, the transfer will be retried on the PCI bus.

Figure 11: QSpan II Control and Status Registers

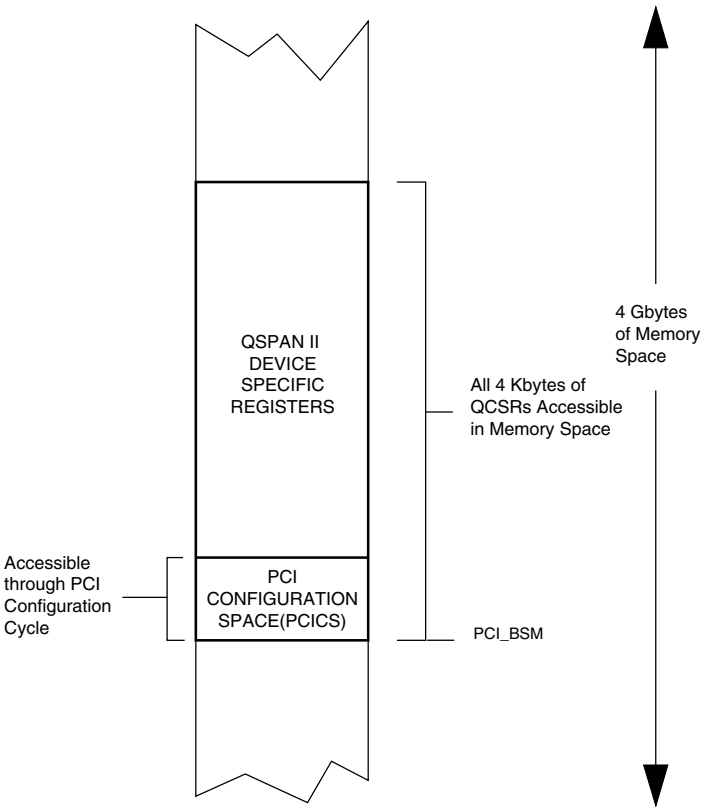

Only the PCI Configuration registers are accessible through PCI Configuration Type 0 cycles. PCI Configuration registers that reside in the lower 256 bytes of QCSR space are accessible in PCI Configuration space. QSpan II's PCI interface decodes AD[7:2] for accesses to its PCI Configuration registers. IDSEL must be asserted for Type 0 Configuration access. Configuration access from the QBus is discussed in "PCI Configuration Cycles Generated from the QBus" on page 108.

© 2019 Renesas Electronics Corporation

QSpan II registers can be accessed in Memory space but not in I/O space. To access QCSRs from PCI bus Memory space, it is necessary to set the Memory Space bit in the PCI_CS register to 1 (see Table 70 on page 201). This step is required for any PCI Target Module access, including register accesses. The PCI_BSM SPACE bit is fixed at 0 so that registers can be accessed in PCI Memory space. The BA[31:12] field of the PCI_BSM register specifies the base address in memory space of the QCSRs. The QCSRs are located in Memory space as address offsets of this base address (see Figure 11).

There is a direct mapping between values on the AD[11:0] lines and the register offsets. The following table illustrates PCI Memory cycle access to bits 15-08 of the PCI_CLASS register (see Table 71 on page 204). This table shows the AD[11:0] and C/BE#[3:0] signals required to access byte 1. This table also shows how the data is presented to the PCI master.

Table 37: PCI Memory Cycle Access to bits 15-08 of the PCI_CLASS register

AD[11:0] (register offset)	BE[3:0]#	AD[31:0][a]
0x008	1101	xx xx B1 xx

a. Data phase.

In systems where the QSpan II is on an add-in card, the MPC860 is the QBus Host. An external host will read QSpan II's PCI Configuration registers to program the QSpan II's PCI registers (for example, Base Address Registers). In this case, the QSpan II's Configuration registers can be programmed by reading from an external EEPROM. When the QSpan II loads the registers from EEPROM, all PCI access to QSpan II are retried.

A power-up option pin called PCI Access Disabled (PCI_DIS), sets a bit in the MISC_CTL2 register to retry all access to the QSpan II from external PCI Masters. PCI accesses to the QSpan II are retried until the QBus Host programs the QSpan II registers and clears this bit. The host can then read the Configuration registers and program the remaining QSpan II's PCI registers.

Even if an EEPROM is used on the board, the QBus Host can still change certain registers before the PCI host can access the QSpan II registers. In this case, the PCI_DIS bit can also be loaded from EEPROM, and the QBus Host can clear it after it modifies the QSpan II registers.

The PCI_DIS pin allows the QBus Host to initialize the QSpan II before the QSpan II will respond to PCI configuration accesses. The serial EEPROM is no longer the only method available to initialize the QSpan II.

© 2019 Renesas Electronics Corporation

7.4 Register Access from the QBus

QSpan II's registers can be selected by an external master from the QBus with the CSREG_ chip-select pin. Since the QSpan II registers span 4K, only the lower 12 bits of the QBus address are used (see Figure 12). Register accesses of 8-bit, 16-bit, or 32-bit size can be preformed. However, the QSpan II is a 32-bit slave device (for more information, see Table 8 on page 45 and Table 9 on page 46).

If an external master on the QBus attempts to access the QSpan II's registers, the transfer is retried on the QBus. QSpan II will then make an internal request for register ownership by the QBus. The request is removed if no register access is attempted within 2^{10} QCLK clock cycles. The request is also removed if a register access completes on the QBus without a subsequent register access beginning within 32 QCLK clock cycles of the completion of the previous register access. This type of access is implemented when the Register Access Control (REG_AC) bit is set to 0 in the MISC_CTL2 register (see Table 130 on page 278).

QSpan II's registers do not support burst accesses. If a burst to register space is attempted from the QBus, a bus error is issued.

Figure 12: QCSR Access from the QBus

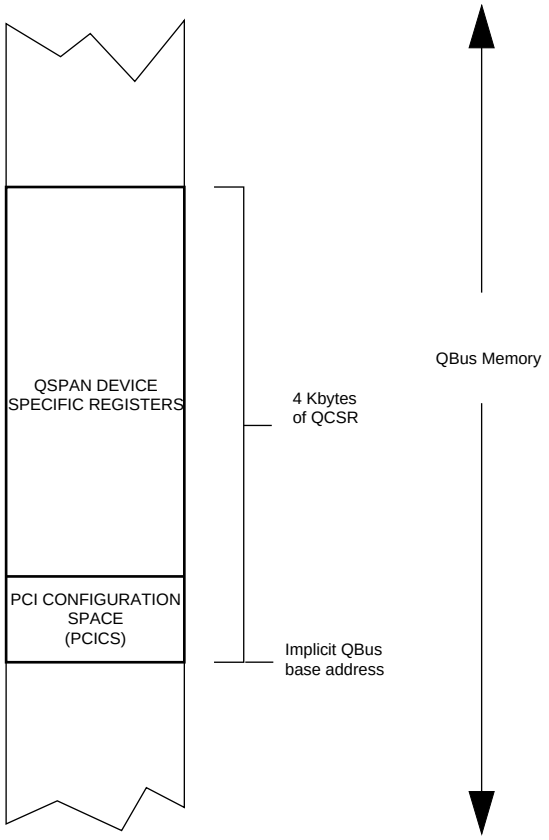

© 2019 Renesas Electronics Corporation

7.4.1 Examples of QBus Register Accesses

The following table illustrates Big-Endian access to bits 15-08 of the PCI_CLASS register. This table shows the address and size signals required to access this byte. This table also shows how the data is presented to the QBus master.

Table 38: Big-Endian QBus Access to bits 15-08 of the PCI_CLASS register

A[11:0]	SIZ[1:0]	A[1:0][a]	D[31:0]
0x00A	01	10	xx xx B2 xx

a. This is a subset of A[11:0].

The following table illustrates Little-Endian access to bits 15-08 of the PCI_CLASS register. There is no real difference between Big-Endian and Little-Endian access to the QSpan II's register. The only difference between Tables 38 and 39 is the name (not the location) of the byte along the data lines.

Table 39: Little-Endian QBus Access to bits 15–08 of the PCI_CLASS register

A[11:0]	SIZ[1:0]	A[1:0][a]	D[31:0]
0x00A	01	10	xx xx B1 xx

a. This is a subset of A[11:0].

7.4.2 PCI Configuration Cycles Generated from the QBus

PCI Configuration cycles of Type 0 or Type 1 can be initiated from the QBus. To initiate Configuration cycles complete the following:

1. Write the Target PCI address in the Configuration Address Register (see Table 115 on page 256).

   This step determines how the address of the Configuration cycle is generated on the PCI bus.

2. Access the Configuration Data register (see Table 117 on page 258). A read access generates a Configuration read on the PCI bus; a write access generates a Configuration write on the PCI bus.

   This step causes the Configuration cycle to occur on the PCI bus. The following subsections describe these two aspects of Configuration cycles.

The Bus Master (BM) bit in the PCI_CS register must be set before attempting a PCI configuration cycle (see Table 70 on page 201).

© 2019 Renesas Electronics Corporation

7.4.3 Address Phase of PCI Configuration Cycles

The type of Configuration cycle that is generated on the PCI bus — Type 0 or Type 1 — is determined by the TYPE bit of the CON_ADD register (see Table 115 on page 256). This determines how the address of the Configuration cycle is generated on the PCI bus. When the QSpan II is being used as a host bridge, the MA_BE_D bit in the MISC_CTL register must be set to a 1. If you set this bit to 1, it allows the QSpan II to signal a successful Configuration cycle to the host processor, even if a Master-Abort occurs on the PCI bus.

If the TYPE bit is set to 1, an access of the CON_DATA register from the QBus interface performs a corresponding Configuration Type 1 cycle on the PCI bus (see Table 117 on page 258). During the address phase of the Configuration Type 1 cycle on the PCI bus, the PCI address lines carry the values encoded in the CON_ADD register (AD[31:0] = CON_ADDR[31:0]).

If the TYPE bit set to 0, an access of the CON_DATA register from the QBus interface performs a corresponding Configuration Type 0 cycle on the PCI bus. If the Device Number is programmed it causes one of the upper address lines, AD[31:16], to be asserted during the address phase of the Configuration Type 0 cycle; the other lines are negated. (Table 40 shows which PCI address line is asserted as a function of the DEV_NUM[3:0] field.) The remaining address lines during the address phase of the Configuration cycle are controlled by the Function Number and Register Number fields of the CON_ADD register:

- AD[15:11] = 00000
- AD[10:8] = FUNC_NUM[2:0]
- AD[7:2] = REG_NUM[5:0]
- AD[1:0] = 00

© 2019 Renesas Electronics Corporation

Table 40: PCI AD[31:16] lines asserted as a function of DEV_NUM field

DEV_NUM[3:0]	AD[31:16]
0000	0000 0000 0000 0001
0001	0000 0000 0000 0010
0010	0000 0000 0000 0100
0011	0000 0000 0000 1000
0100	0000 0000 0001 0000
0101	0000 0000 0010 0000
0110	0000 0000 0100 0000
0111	0000 0000 1000 0000
1000	0000 0001 0000 0000
1001	0000 0010 0000 0000
1010	0000 0100 0000 0000
1011	0000 1000 0000 0000
1100	0001 0000 0000 0000
1101	0010 0000 0000 0000
1110	0100 0000 0000 0000
1111	1000 0000 0000 0000

7.4.3.1 Data Phase of PCI Configuration Cycles

PCI Configuration accesses from the QBus proceed as delayed transactions. This is true for Configuration reads as well as writes. When the CON_DATA register is accessed, the QBus master is retried. QSpan II then initiates a Configuration cycle on the PCI bus.

The PCI byte enable driver is dependent on the attributes of the QBus cycle (for example, QBus address and SIZ signals) during the Configuration cycle. Until the Configuration cycle completes on the PCI bus any further Configuration cycle attempt is retried. In the case of a read (read to CON_DATA), the data from the PCI bus is stored in the CON_DATA register. After the Configuration cycle completes on the PCI bus — when the QBus master attempts to access the CON_DATA register at the same address — the cycle completes successfully on the QBus. In the case of a write (write to CON_DATA), the cycle completes on the QBus after the Configuration write completes on the PCI bus.

7.4.4 Interrupt Acknowledge Cycle

A mechanism is provided for a QBus register read to generate a PCI Interrupt Acknowledge cycle (see “Interrupt Acknowledge Cycle” on page 119.)

© 2019 Renesas Electronics Corporation

7.5 Register Access Synchronization

QSpan II supports non-simultaneous access to its registers from the QBus Interface and the PCI Interface. This feature presents a synchronization issue. QSpan II does not have the ability to lock out register accesses from one interface so that accesses can be performed on the other interface. QSpan II also does not have semaphore capabilities. If a master on one interface is executing a test and set procedure — reading from a register and then setting part or all of the register — there is the possibility that between the test and the set, a master on the other interface sets the same register. This issue is most relevant to the Interrupt Control register (see Table 120 on page 263).

Figure 13: Example of a Register-Access Synchronization Problem

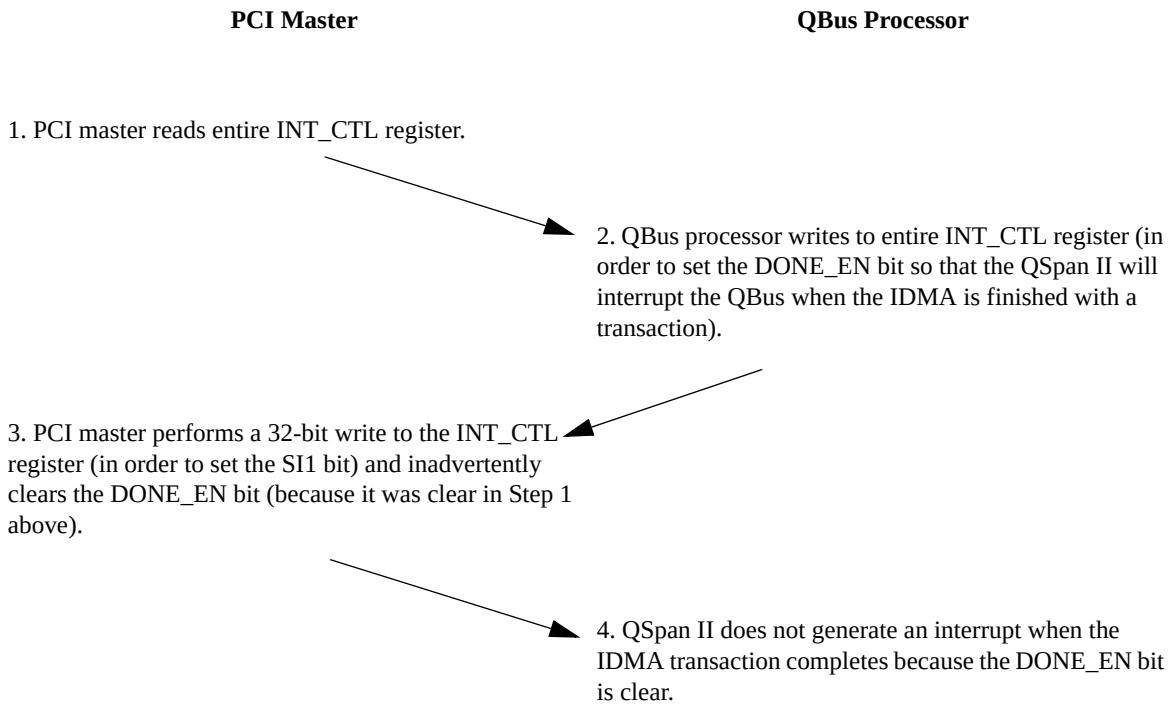

Two possible solutions to this problem include the following:

1. Perform byte-wide writes on the PCI bus as opposed to 32-bit writes. This does not solve all the register-access synchronization problems because the other 7 bits in the write may change between a read and a write. Since the SI1 bit and the DONE_EN bit (see Table 120 on page 263) are separated by two bytes, it would solve the problem described in Figure 13.
2. Design the system to always set the DONE_EN bit, or whatever other bit is susceptible to this problem. However, this may lead to the generation of more interrupts, and consequently, an impact on performance.

© 2019 Renesas Electronics Corporation

7.6 Mailbox Registers

QSpan II has four 32-bit mailbox registers which provide an additional communication path between the PCI bus and the QBus. The mailboxes support read and write accesses from either bus and can be enabled to generate an interrupt on either bus when they are written to from the other bus.

For example, if mailbox 0 is programmed to generate a QBus interrupt — by setting MB0_EN to 1 in INT_CTL register, and MB0_DIR to 0 in INT_DIR register — then a PCI write with any of the byte-lanes enabled to mailbox 0 will generate a QBus interrupt (QINT_). In this case, mailbox 0 can also be written to from the QBus, but this will not generate a QBus interrupt. Likewise, if a mailbox is programmed to generate a PCI interrupt, a PCI interrupt is only generated when that mailbox is written to from the QBus.

To clear an interrupt, write a 1 to the corresponding status bit in INT_STAT (see Table 119 on page 260).

© 2019 Renesas Electronics Corporation

Chapter 8: The Interrupt Channel

This chapter describes the function of the QSpan II Interrupt Channel. The following topics are discussed:

- “Hardware-Triggered Interrupts” on page 114
- “Software-Triggered Interrupts” on page 115
- “Interrupt Acknowledge Cycle” on page 119
- “Disabling PCI Interrupts” on page 119

8.1 Overview

Certain hardware and software events can trigger interrupts on the QBus and the PCI bus through the Interrupt Channel (see Figure 14). Two bidirectional interrupt pins are provided: INT# for the PCI bus; QINT_ for the QBus.

© 2019 Renesas Electronics Corporation

8.2 Hardware-Triggered Interrupts

In order for an input to trigger an interrupt on the opposite interface, the corresponding enable bit must be set in the INT_CTL register (see Table 120 on page 263). For example, for INT# to trigger QINT_, the INT_EN bit must be set. The status of the interrupt is logged in the INT_STAT register.

It is only possible to route interrupts in one direction at a time. For example, it is not possible to allow PCI interrupt sources to be mapped to QINT_ while allowing QINT_ sources to be mapped to INT#.

Figure 14: Interrupt Channel — Functional Diagram

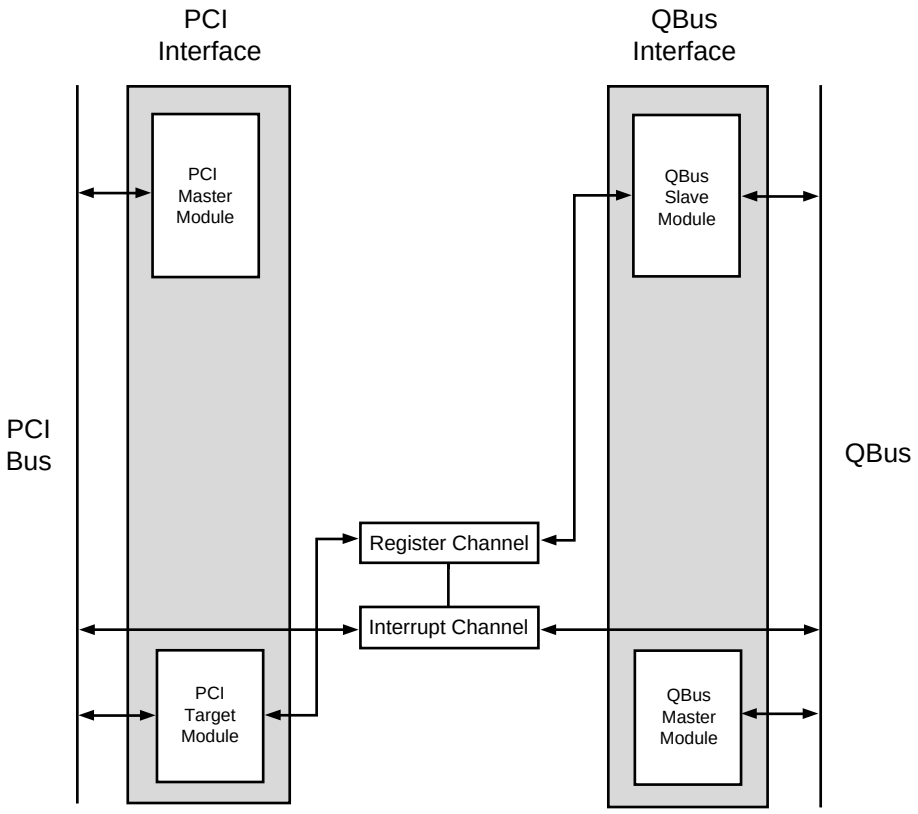

© 2019 Renesas Electronics Corporation

Table 41: Mapping of Hardware-Initiated Interrupts

Input	Enable bits (INT_CTL, see Table 120 on page 263)	Status Bits (INT_STAT, see Table 119 on page 260)	Output
INT#	INT_EN	INT_IS	QINT_
PERR#	PERR_EN	PERR_IS	
SERR#	SERR_EN	SERR_IS	
QINT_	QINT_EN	QINT_IS	INT#

If INT_EN is set, then the assertion of INT# causes QINT_ to be asserted until INT# is negated and the INT_IS bit is cleared. Because INT# is level sensitive, if the INT_IS bit is cleared before INT# is negated, the clearing of the bit will have no affect and QINT_ will remain asserted.

To negate QINT_ when its assertion is caused by the assertion of PERR# or SERR#, complete the following procedure:

1. Clear the error status bit in the source PCI device.
2. Clear the status bit in the INT_STAT register.

To negate INT# when its assertion is caused by the assertion of QINT_, negate QINT_ and then clear the QINT_IS bit in the INT_STAT register.

8.3 Software-Triggered Interrupts

QSpan II can generate interrupts based upon internal events provided that the interrupt source is enabled in the INT_CTL register (see Table 120 on page 263). Interrupts can be mapped to an interrupt output pin on the PCI bus (INT#) or the QBus (QINT_) depending on the value of the interrupt mapping bit in the INT_DIR register (see Table 121 on page 266). The status of the individual interrupt sources can be determined by reading the corresponding status bit (see Table 119 on page 260). To clear an interrupt, the original interrupt source must be cleared first. For example, to clear the IDMA Reset Interrupt, the IRST bit in the IDMA/DMA_CS register must be cleared first (see Table 109 on page 246).

© 2019 Renesas Electronics Corporation

Table 42: Interrupt Source, Enabling, Mapping, Status and Clear bits

Source	Source Bits Write 1 to clear	Enable Bits INT_CTL (see Table 120 on page 263)	Mapping Bits INT_DIR (see Table 121 on page 266)	Interrupt Status Bits INT_STAT (see Table 119 on page 260)
QBus Slave Channel Errors (Error on the PCI bus)				
PCI Bus Error	ES in PB_ERRCS (see Table 97 on page 232)	PEL_EN	PEL_DIR	PEL_IS
Data Parity Error	MD_PED in PCI_CS (see Table 70 on page 201)	MDPED_EN	MDPED_DIR	MDPED_IS
PCI Bus Target Channel Errors (Error on the QBus)				
QBus Error	ES in QB_ERRCS (see Table 147 on page 291)	QEL_EN	QEL_DIR	QEL_IS
IDMA/DMA Channel Events[a]				
IDMA/DMA QBus Error	IQE in IDMA/DMA_CS (see Table 109 on page 246)	IQE_EN	IQE_DIR	IQE_IS
IDMA/DMA PCI Bus Error	IPE in IDMA/DMA_CS (see Table 109 on page 246)	IPE_EN	IPE_DIR	IPE_IS
IDMA/DMA Reset	IRST in IDMA/DMA_CS (see Table 109 on page 246)	IRST_EN	IRST_DIR	IRST_IS
IDMA/DMA Done	DONE in IDMA/DMA_CS (see Table 109 on page 246)	DONE_EN	DONE_DIR	DONE_IS
PCI Bus Error	ES in PB_ERRCS (see Table 97 on page 232)	PEL_EN	PEL_DIR	PEL_IS
Miscellaneous Events				
PCI_CS Register Interrupt Status	Status bit(s) in Table 70 on page 201[b]	PCSR_EN	PCSR_DIR	PCSR_IS
MailBox 3 Interrupt Status	-	MB3_EN	MB3_DIR	MB3_IS
MailBox 2 Interrupt Status	-	MB2_EN	MB2_DIR	MB2_IS
MailBox 1 Interrupt Status	-	MB1_EN	MB1_DIR	MB1_IS
MailBox 0 Interrupt Status	-	MB0_EN	MB0_DIR	MB0_IS
QBus Data Parity Error	-	QDPE_EN	QDPE_DIR	QDPE_S

© 2019 Renesas Electronics Corporation

Table 42: Interrupt Source, Enabling, Mapping, Status and Clear bits *(Continued)*

Source	Source Bits Write 1 to clear	Enable Bits INT_CTL (see Table 120 on page 263)	Mapping Bits INT_DIR (see Table 121 on page 266)	Interrupt Status Bits INT_STAT (see Table 119 on page 260)
Power State Changed Interrupt Status	PME_EN PCI_PMCS (see Table 85 on page 218)	PSC_EN	PSC_DIR	PSC_S
Outbound Post_List Not Empty Status	-	OPNE_EN	OPNE_DIR	OPNE_S
Inbound Post_List New Entry Interrupt Status	-	IPN_EN	IPN_DIR	IPN_S
Inbound Free_List Empty Status	-	IFE_EN	IFE_DIR	IFE_S
Outbound Free_List Empty Status	-	OFE_EN	OFE_DIR	OFE_S
Inbound Post_List Full Status	-	IPF_EN	IPF_DIR	IPF_S
Outbound Free_List Full Status	-	OFF_EN	OFF_DIR	OFF_S

a. See also “IDMA Errors, Resets, and Interrupts” on page 89.

b. Any of the following bits in PCI_CS: D_PE, S_SERR, R_MA, R_TA, or S_TA.

© 2019 Renesas Electronics Corporation

Four software interrupt bits are provided: Software Interrupt 0 through 3. Setting a software interrupt bit (SI3, SI2, SI1, or SI0) triggers the interrupt status (see the following table) and causes the QSpan II to generate an interrupt on the QBus (QINT_) or PCI bus (INT#), depending on the relevant mapping bit. There is no enable bit for software interrupts. The interrupt line will be driven until the status bit is cleared. To clear the status bit write a 1.

Table 43: Software Interrupt Mapping, Status and Source bits

Source	Source Bits	Mapping Bits	Interrupt Status Bits[a]
	(INT_CTL, see Table 120 on page 263)	(INT_DIR, see Table 121 on page 266)	(INT_STAT, see Table 119 on page 260)
	(INT_CTL2, see Table 122 on page 269)	-	-
Software Interrupt 0	SI0	SI0_DIR	SI0_IS
Software Interrupt 1	SI1	SI1_DIR	SI1_IS
Software Interrupt 2	SI2	SI2_DIR	SI2_IS
Software Interrupt 3	SI3	SI3_DIR	SI3_IS

a. Write 1 to clear the interrupt.

Interrupts in one channel do not affect processing in the other channel.

8.3.1 Interrupt Generation due to PCI Configuration Register Status Bits

QSpan II can generate an interrupt (QINT_ or INT#) when any of the status bits in the PCI_CS register is set.

The direction of the interrupt is controlled by the PCSR_DIR bit in the INT_DIR register (see Table 121 on page 266). QSpan II generates the interrupt and sets the PCSR_IS bit in the INT_STAT register when any of the following status bits is set (see Table 119 on page 260):

- D_PE
- S_SERR
- R_MA
- R_TA
- S_TA
- excluding MD_PED

© 2019 Renesas Electronics Corporation

The MD_PED bit already generates an interrupt, so this functionality will not cause the PCSR_EN status bit to be set. To clear the interrupt and interrupt status bit, write a 1 to PCSR_IS in the INT_STAT (see Table 119 on page 260).

8.4 Interrupt Acknowledge Cycle

Reading the IACK_GEN register from the QBus causes an IACK cycle to be generated on the PCI bus (see Table 118 on page 259). The byte lanes enabled on the PCI bus are determined by SIZ[1:0] and A[1:0] of the QBus read. The address on the QBus used to access the IACK_GEN register is passed directly over to the PCI bus during the PCI IACK cycle. However, address information is ignored during PCI IACK cycles, so this has no effect.

Reads from this register behave as delayed transfers: the QBus master is retried until the read data is latched from the PCI Target. When the IACK cycle completes on the PCI bus, the data is latched into the IACK_GEN register, which is returned as read data when the QBus master attempts the cycle again.

Writing to this register from the QBus or PCI bus has no effect. Reads from the PCI bus return all zeros.

8.5 Disabling PCI Interrupts

QSpan II is a single function device, so it implements a single PCI interrupt (INT#). One restriction of this option is that it's always enabled: INT_PIN is set to 1 in the PCI_MISC1 register. If the system does not require the QSpan II to interrupt on the PCI bus, the QSpan II can be disabled from requesting an interrupt on the PCI bus.

The Interrupt Pin (INT_PIN) field in PCI_MISC1 register can be loaded from EEPROM, or programmed from the QBus side before the PCI BIOS can access this register (see Table 83 on page 216). The INT_PIN setting does not affect the assertion of the QSpan II's INT# output. The INT_LINE field in PCI_MISC1 will still be R/W (default=0). Software must set this field to 0xff to indicate "unknown" or "no connection." For more information see the *PCI Local Bus Specification 2.2*.

© 2019 Renesas Electronics Corporation

© 2019 Renesas Electronics Corporation

Chapter 9: The EEPROM Channel

This chapter describes the QSpan II's EEPROM Channel. The following topics are discussed:

- "EEPROM Configuration and Plug and Play Compatibility" on page 123
- "EEPROM I2C Protocol" on page 123
- "Mapping of EEPROM Bits to QSpan II Registers" on page 124
- "Programming the EEPROM from the QBus or PCI Bus" on page 127
- "EEPROM Access" on page 128
- "Vital Product Data Support" on page 128

9.1 Overview

Some QSpan II registers can be programmed by data in an EEPROM at system reset (for more information, see Table 44 on page 125). This allows board designers to perform the following:

- set identifiers for their cards on the PCI bus at reset
- enable the PCI Bus Expansion ROM Control Register
- set various address and parameters of images

If the QSpan II is configured with EEPROM or by an external QBus master using the PCI_DIS pin, the device can boot-up as a Plug and Play compatible device (see "EEPROM Configuration and Plug and Play Compatibility" on page 123).

© 2019 Renesas Electronics Corporation

Figure 15: EEPROM Channel — Functional Diagram

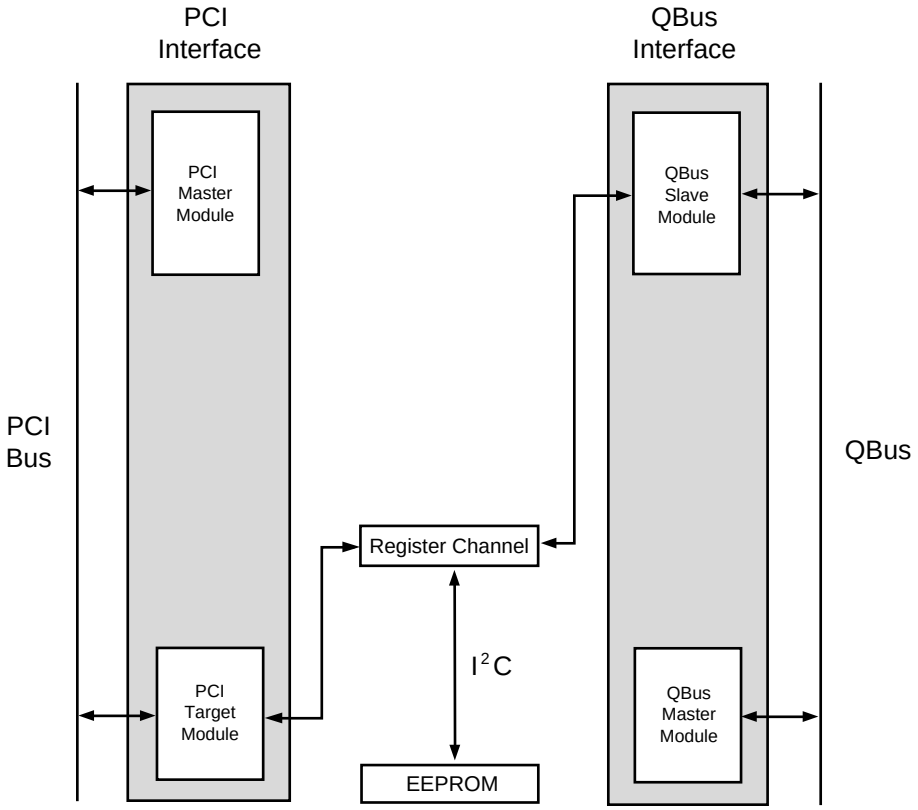

QSpan II supports an additional scheme to be Plug and Play compatible without the use of an EEPROM. In this case, the power-up option, PCI Access Disabled (PCI_DIS) is pulled high during reset (see Table 130 on page 278). This forces the QSpan II to retry all PCI access. During this time, the QBus Host can program the necessary registers — for- example, the registers that are normally loaded from the EEPROM — and then write a 0 to the PCI_DIS bit. This allows the QSpan II to accept PCI cycles.

The PCI_DIS option can also be enabled by loading from the EEPROM. However, the EEPROM loading cannot clear the PCI_DIS bit. Therefore, if PCI_DIS is enabled from the EEPROM loading, then the Host must configure the QSpan II's registers before the QSpan II allows register access from the PCI bus.

QSpan II supports reads from and writes to the EEPROM.

256 bytes of data can be accessed with the EEPROM. QSpan II normally loads the first 12 bytes of data for its own programming. QSpan II can load the next 11 bytes from the EEPROM if the last three bits of the 12th byte are 010.

© 2019 Renesas Electronics Corporation

9.2 EEPROM Configuration and Plug and Play Compatibility

There are two ways to configure the EEPROM to allow the QSpan II to boot as a PCI Plug and Play compatible device:

- The EEPROM can be configured before it is placed on the board.
- The EEPROM can be configured after it is installed. In this case, the first time the QSpan II-based board boots, it will not be PCI Plug and Play compatible. You will need to program the EEPROM from either the QBus or the PCI bus (see "Programming the EEPROM from the QBus or PCI Bus" on page 127 for details).

The following sections discuss the implementation of the EEPROM.

9.3 EEPROM I^{2}C Protocol

QSpan II supports the 2-wire I^{2}C protocol, using a clock output (SCL) and a I-directional signal (SDA). If the SDA or ENID pin is asserted as 1 during a PCI bus reset (for example, RST# active), then at the conclusion of this reset the QSpan II reads 12 bytes of data from the EEPROM. QSpan II can also load the next 11 bytes from the EEPROM if the last three bits of the 12th byte are 010b.

The read of the 12 bytes from the EEPROM is performed as a Sequential Read. After the START condition the QSpan II puts out a 7-bit device select code of 1010000. The four most significant bits of the device select code for the I^{2}C protocol are required to be 1010. The following three bits are chip-enable signals that are 000. The chip-enable lines on the EEPROM must be tied low. QSpan II expects the data delivered from the EEPROM starting at address zero. Figure 16 shows this Sequential Read transaction.

After reset, the EEPROM port completes a STOP then a START before loading from the EEPROM.

Figure 16: Sequential Read from EEPROM

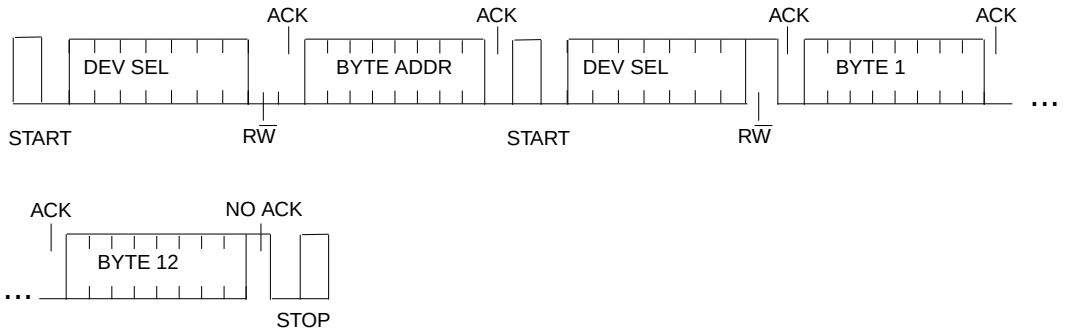

© 2019 Renesas Electronics Corporation

While the registers are being loaded from the EEPROM, all accesses to the QSpan II by an external PCI bus master are terminated with a retry. During this period, write accesses to the EEPROM programmable registers from the QBus have no effect, and reads return all zeros.

Some EEPROM devices require a write control signal. This signal should not be pulled inactive if the intention is to program the EEPROM device with the QSpan II.

If RESETI_ is asserted when the QSpan II is reading from the EEPROM then the EEPROM's contents may not be loaded correctly.

9.4 Mapping of EEPROM Bits to QSpan II Registers

This section describes the mapping between EEPROM bits and the QSpan II's registers. The following registers can be programmed by the EEPROM:

- PCI Configuration (PCI_SID register): see Table 79 on page 212
- PCI Expansion ROM (PCI_BSROM and PBROM_CTL registers): see Table 80 on page 213 and Table 95 on page 230
- PCI Bus Target Image 0 (PCI_BST0 and PBTI0_CTL registers): see Table 75 on page 208 and Table 89 on page 222
- PCI Bus Target Image 1 (PCI_BST1 and PBTI1_CTL registers): see Table 77 on page 210 and Table 92 on page 226
- QBus Slave Image 0 (QBSI0_CTL and QBSI0_AT registers): see Table 133 on page 283 and Table 138 on page 285
- PCI Configuration Space ID (PCI_ID register): see Table 69 on page 200
- PCI Configuration Class (PCI_CLASS register): see Table 71 on page 204
- PCI Configuration Miscellaneous 1 (PCI_MISC1 register): see Table 83 on page 216
- Miscellaneous Control 2 (MISC_CTL2 register): see Table 130 on page 278
- PCI Power Management Capabilities (PCI_PMC register): see Table 84 on page 217

© 2019 Renesas Electronics Corporation

- PCI Configuration Base Address for Target 0 (PCI_BST0 register): see Table 75 on page 208
- PCI Configuration Base Address for Target 0 (PCI_BST1 register): see Table 77 on page 210

Table 44: Destination of EEPROM Bits Read[a]

Byte	Function							
	Bit 7	**Bit 6**	**Bit 5**	**Bit 4**	**Bit 3**	**Bit 2**	**Bit 1**	**Bit 0**
0	PCI_SID							
	[31] (SID)	[30] (SID)	[29] (SID)	[28] (SID)	[27] (SID)	[26] SID)	[25] (SID)	[24] (SID)
1	PCI_SID							
	[23] (SID)	[22] (SID)	[21] (SID)	[20] (SID)	[19] (SID)	[18] (SID)	[17] (SID)	[16] (SID)
2	PCI_SID							
	[15] (SVID)	[14] (SVID)	[13] (SVID)	[12] (SVID)	[11] (SVID)	[10] (SVID)	[9] (SVID)	[8] (SVID)
3	PCI_SID							
	[7] (SVID)	[6] (SVID)	[5] (SVID)	[4] (SVID)	[3] (SVID)	[2] (SVID)	[1] (SVID)	[0] (SVID)
4	Enables PCI_BSROM[b]	PBROM_CTL						
		[22] (BS)	[21] (BS)	[20] (BS)	[19] (TC)	[18] (TC)	[17] (TC)	[16] (TC)
5	PBROM_CTL							
	[15] (TA)	[14] (TA)	[13] (TA)	[12] (TA)	[11] (TA)	[10] (TA)	[9] (TA)	[8] (TA)
6	PBROM_CTL							
	[7] (TA)	[6] (TA)	[5] (TA)	[4] (TA)	[3] (TA)	[2] (TA)	[1] (TA)	[0] (TA)
7	PBROM_CTL		Enables PCI_BST0[b]	PBTI0_CTL				
	[25] DSIZE)	[24] (DSIZE)		[27] (BS)	[26] (BS)	[25] (BS)	[24] (BS)	[6] (PAS)
8	Enables PCI_BST1[b]	PBTI1_CTL					QBSI0_CTL	
		[27] (BS)	[26] (BS)	[25] (BS)	[24] (BS)	[6] (PAS)	[31] (PWEN)	[24] (PAS)
9	QBSI0_AT							
	[31] (TA)	[30] (TA)	[29] (TA)	[28] (TA)	[27] (TA)	[26] (TA)	[25] (TA)	[24] (TA)

© 2019 Renesas Electronics Corporation

Table 44: Destination of EEPROM Bits Read[a] *(Continued)*

Byte	Function							
	Bit 7	**Bit 6**	**Bit 5**	**Bit 4**	**Bit 3**	**Bit 2**	**Bit 1**	**Bit 0**
10	QBSI0_AT							
	[23] (TA)	[22] (TA)	[21] (TA)	[20] (TA)	[19] (TA)	[18] (TA)	[17] (TA)	[16] (TA)
11	QBSI0_AT					Enable long EEPROM load[c]		
	[7] (BS)	[6] (BS)	[5] (BS)	[4] (BS)	[1] (EN)			
12	PCI_ID							
	[15] (DID)	[14] (DID)	[13] (DID)	[12] (DID)	[11] (DID)	[10] (DID)	[9] (DID)	[8] (DID)
13	PCI_ID							
	[7] (DID)	[6] (DID)	[5] (DID)	[4] (DID)	[3] (DID)	[2] (DID)	[1] (DID)	[0] (DID)
14	PCI_ID							
	[15] (VID)	[14] (VID)	[13] (VID)	[12] (VID)	[11] (VID)	[10] (VID)	[9] (VID)	[8] (VID)
15	PCI_ID							
	[7] (VID)	[6] (VID)	[5] (VID)	[4] (VID)	[3] (VID)	[2] (VID)	[1] (VID)	[0] (VID)
16	PCI_CLASS							
	[7] (BASE)	[6] (BASE)	[5] (BASE)	[4] (BASE)	[3] (BASE)	[2] (BASE)	[1] (BASE)	[0] (BASE)
17	PCI_CLASS							
	[7] (SUB)	[6] (SUB)	[5] (SUB)	[4] (SUB)	[3] (SUB)	[2] (SUB)	[1] (SUB)	[0] (SUB)
18	PCI_CLASS							
	[7] (PROG)	[6] (PROG)	[5] (PROG)	[4] (PROG)	[3] (PROG)	[2] (PROG)	[1] (PROG)	[0] (PROG)
19	PCI_MISC1							
	[7] (MAX_LAT)	[6] (MAX_LAT)	[5] (MAX_LAT)	[4] (MAX_LAT)	[3] (MAX_LAT)	[2] (MAX_LAT)	[1] (MAX_LAT)	[0] (MAX_LAT)

© 2019 Renesas Electronics Corporation

Table 44: Destination of EEPROM Bits Read[a] *(Continued)*

Byte	Function							
	Bit 7	**Bit 6**	**Bit 5**	**Bit 4**	**Bit 3**	**Bit 2**	**Bit 1**	**Bit 0**
20	PCI_MISC1							
	[7] (MIN_GNT)	[6] (MIN_GNT)	[5] (MIN_GNT)	[4] (MIN_GNT)	[3] (MIN_GNT)	[2] (MIN_GNT)	[1] (MIN_GNT)	[0] (MIN_GNT)
21	PCI_MISC1	MISC_CTL2	PCI_PMC					
	[7] (INT_PIN0)	[6] (!PCI_DIS[d])	[5] (PME_SP)	[4] (PME_SP)	[3] (DSI)	[2] (PM_VER)	[1] (PM_VER)	[0] (PM_VER)
22	PCI_BST0	PCI_BST1	Reserved	Reserved	Reserved	Reserved	Reserved	Reserved
	[7] (PREF)	[6] (PREF)						

a. The top part of each byte row indicates the register name. Bit locations within the register are in square brackets, and field names are within round brackets.

b. Unlike the other non-reserved bits read from the EEPROM, bit 7 of byte 4, bit 5 of byte 7 and bit 7 of byte 8 are not written to a QSpan II register. These bits determine whether certain other register bits are loaded from the EEPROM.

c. If the last three bits of the 12th byte are 010 then the QSpan II will read the next 11 bytes from the EEPROM. If no further loading is required, these bits must be programmed as 000.

d. PCI_DIS: If 0, PCI_DIS in MISC_CTL2 is set to 1; if 1, it has no effect on the PCI_DIS setting in the MISC_CTL2 register.

9.5 Programming the EEPROM from the QBus or PCI Bus

EEPROM can be accessed from the QBus or the PCI bus, either by a read or write, using 32-bit writes to the EEPROM_CS register. EEPROM read and write transactions are described in the following sections.

9.5.1 Writing to the EEPROM

EEPROM values are loaded by the QSpan II when the QSpan II is reset. The user must reset the QSpan II after writing to the EEPROM through the QSpan II in order to load new EEPROM data written to the lower 32 bytes.

To write to the EEPROM, complete the following:

1. Read the EEPROM_CS register and make sure that the EEPROM Active (ACT) bit is set to 0; this indicates prior EEPROM access has completed (see Table 129 on page 277).
2. Perform a 32-bit write to the EEPROM_CS register.

   This write cycle should supply the appropriate values for the ADDR[7:0] and DATA[7:0] fields, as well as setting the READ bit to 0.

© 2019 Renesas Electronics Corporation

Writes complete normally on the QBus and the PCI bus regardless of the state of the ACT bit. However, if the ACT bit is to 1, the write does not change the content of the EEPROM_CS register. The master is not informed that the EEPROM_CS register access failed due to the status of the ACT bit (see Table 129 on page 277). To make sure that the register write has been successful, the user can read from the EEPROM_CS register after the write.

9.5.2 Reading from the EEPROM

To read from the EEPROM complete the following:

1. Read the EEPROM_CS register and make sure that the ACT bit is set to 0; this indicates prior EEPROM access has completed (see Table 129 on page 277).
2. Write the appropriate address in the ADDR[7:0] field of the EEPROM_CS register.
3. Set the READ bit of the EEPROM_CS register to 1 (if it has not already been set).

   QSpan II initiates a read from the EEPROM at the address specified in the ADDR[7:0] field. The ACT bit is cleared (set to 0) when the read completes. QSpan II stores the read data in the DATA[7:0] field of the EEPROM_CS register. Only one byte can be read at a time.
4. Read the DATA[7:0] field of the EEPROM_CS register.

9.6 EEPROM Access

QSpan II supports access to the EEPROM after the QSpan II has powered up without loading from the EEPROM. To access the EEPROM using this method, set the EEPROM_ACC bit in the MISC_CTL2 register (see Table 130 on page 278). If the EEPROM_ACC bit is set, the EEPROM related registers are enabled and the QSpan II can read and write to the EEPROM using the EEPROM_CS register or the Vital Product Data (VPD) registers.

9.7 Vital Product Data Support

Vital Product Data (VPD) is a *PCI 2.2 Specification* feature supported by the QSpan II. VPD contains information that defines items such as hardware, software, and microcode elements of a system. VPD also provides a mechanism for storing information such as performance and failure data on a device. VPD resides in a local storage device. With the QSpan II, VPD is supported through the serial EEPROM. If an external EEPROM is not used, the VPD feature is not enabled; VPD will not be a part of the Capabilities List.

Since the lower bytes in the EEPROM contain data for setting up the QSpan II before software initialization, the lower portion of the EEPROM (first 32 bytes) is not accessible through the VPD registers. The upper 224 bytes of the 256-byte EEPROM are designated as read/write through the VPD. Valid VPD byte addresses are 0x0 --> 0xDC, assuming a 2 Kbit serial EEPROM is installed on the board.

© 2019 Renesas Electronics Corporation

VPD access to the EEPROM is similar to the EEPROM access implemented in QSpan II through the EEPROM_CS register. Since they both access the same resource, only one of these mechanisms can be used at a time to access the EEPROM.

9.7.1 Reading VPD Data

QSpan II implements 8 bits of address for accessing the EEPROM (maximum of 256 bytes). The VPD address must be 32-bit aligned. QSpan II will add 0x20 to the VPD address to generate an EEPROM address in the upper 224 bytes of the EEPROM. A single read access reads four consecutive bytes starting from the VPD address.

During a read access the VPD address and the VPD flag bit are written (see Table 87 on page 220). The VPD flag bit must be set to 0 to indicate a VPD read access. QSpan II sets the VPD flag bit to 1 when it has completed reading the four bytes from the EEPROM. The VPD flag bit must be polled to identify when the read is complete. Byte 0 (bits 7–0) of the VPD data register contains the data referenced by the VPD address; bytes 1–3 contain the successive bytes. If PCI_VPD register or EEPROM_CS register is written to prior to the flag bit being set to one, the results of the original read operation are unpredictable.

9.7.2 Writing VPD Data

A write can occur to the upper 224 bytes of the EEPROM. Similar to the read, the QSpan II adds 0x20 to the VPD address to get the EEPROM address. A single write operation writes four consecutive bytes starting from the address specified by the VPD Address.

The VPD data register is written with the 4 bytes of data. Byte 0 (register bits 7–0) contains the data to be written to the location referenced by the VPD address, bytes 1–3 contain the data for the successive bytes. The VPD Address and VPD flag then must be written. The VPD flag bit must be set to 1 to indicate a VPD write. The VPD flag bit must be polled to determine when the write to the EEPROM is completed. QSpan II sets the VPD flag bit to 0 when the write is completed. The PCI_VPD or EEPROM_CS register must not be written while a write operation is taking place, otherwise results are unpredictable.

If a read or write is attempted to a VPD address above 0xE0, then the QSpan II does not perform any EEPROM access, and the VPD address will contain the previous value.

© 2019 Renesas Electronics Corporation

© 2019 Renesas Electronics Corporation

Chapter 10: I_2O Messaging Unit

This chapter discusses the I_2O Messaging Unit capabilities of the QSpan II. The following topics are described:

- "Inbound Messaging" on page 132
- "Outbound Messaging" on page 133
- "I2O Operation" on page 134
- "Summary of I2O Operations" on page 134
- "I2O Interrupts" on page 137

10.1 Overview

QSpan II's I_2O Messaging Unit reduces Host processor utilization by using an I/O processor to complete I/O transactions. QSpan II is compliant with *I_2O Specification 1.5*.

QSpan II complies with the I_2O specification by enabling intelligent I/O cards — also called IOP agents — to implement four FIFOs in QBus memory (see Figures 18 and 17). These FIFOs queue Message Frame Addresses (MFAs) which point to message frame locations. There are two FIFOs for inbound messages and two FIFOs for outbound messages: Inbound Free_List FIFO (IF_FIFO), Inbound Post_List FIFO (IP_FIFO), Outbound Free_List FIFO (OF_FIFO), and Outbound Post_List FIFO (OP_FIFO).

There are two pointers for each circular FIFO or queue: Top, referred to as Tail in the *I_2O Specification*; and Bottom, referred to as Head in the *I_2O Specification*. Therefore, there are eight pointer registers for the four FIFOs in QSpan II register space. These pointers are offsets from a fixed QBus address (QBus_I_2O_Base_Address or QIBA). QIBA is aligned to a 1 Mbyte boundary. The four I_2O FIFOs must be the same size; the start address for each FIFO must also be aligned to the FIFO size boundary. Writes to the queue add an MFA to the Top of the FIFO, and reads draw an MFA from the Bottom of the FIFO.

© 2019 Renesas Electronics Corporation

Figure 17: I_2O Messaging Unit — Functional Diagram

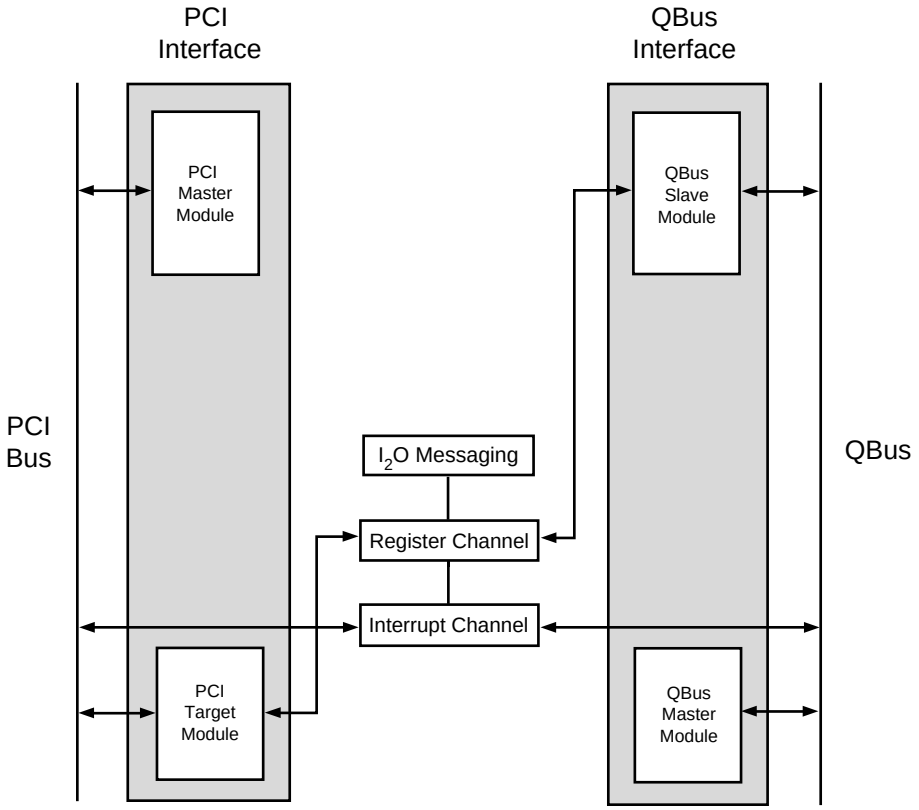

10.2 Inbound Messaging

The Inbound Post_List FIFO (IP_FIFO) contains MFAs for message frames that are sent from the host, or other IOPs on the PCI bus, to QBus memory. The Inbound Free_List FIFO (IF_FIFO) contains MFAs for message frames that are free to be filled by the sender. The sender, which can be either the host or other IOPs, receives the MFA from the Bottom of the IF_FIFO and writes a message to the shared QBus memory at the address pointed to by the MFA. The sender then posts the MFA for the message frame in the inbound queue register, which is at offset 0x040 from the I_2O PCI Base Address Register I_2O_BAR at offset 0x010.

When this occurs, the QSpan II writes this MFA to the Top of the Inbound Post_List FIFO and generates a QBus interrupt, if enabled. The Host (for example, MPC860) then picks up the MFA from the Bottom of the Inbound Post_List FIFO, processes the message, and then releases the MFA by posting it to the Top of the Inbound Free_List FIFO. The PCI host reads from the Inbound queue (offset 0x040) to see if there is an MFA available for a new posting. If the Inbound Free_List FIFO is empty, the QSpan II returns 0xFFFF_FFFF to the PCI Host or IOP on the PCI bus.

© 2019 Renesas Electronics Corporation

Figure 18: I_2O Implementation

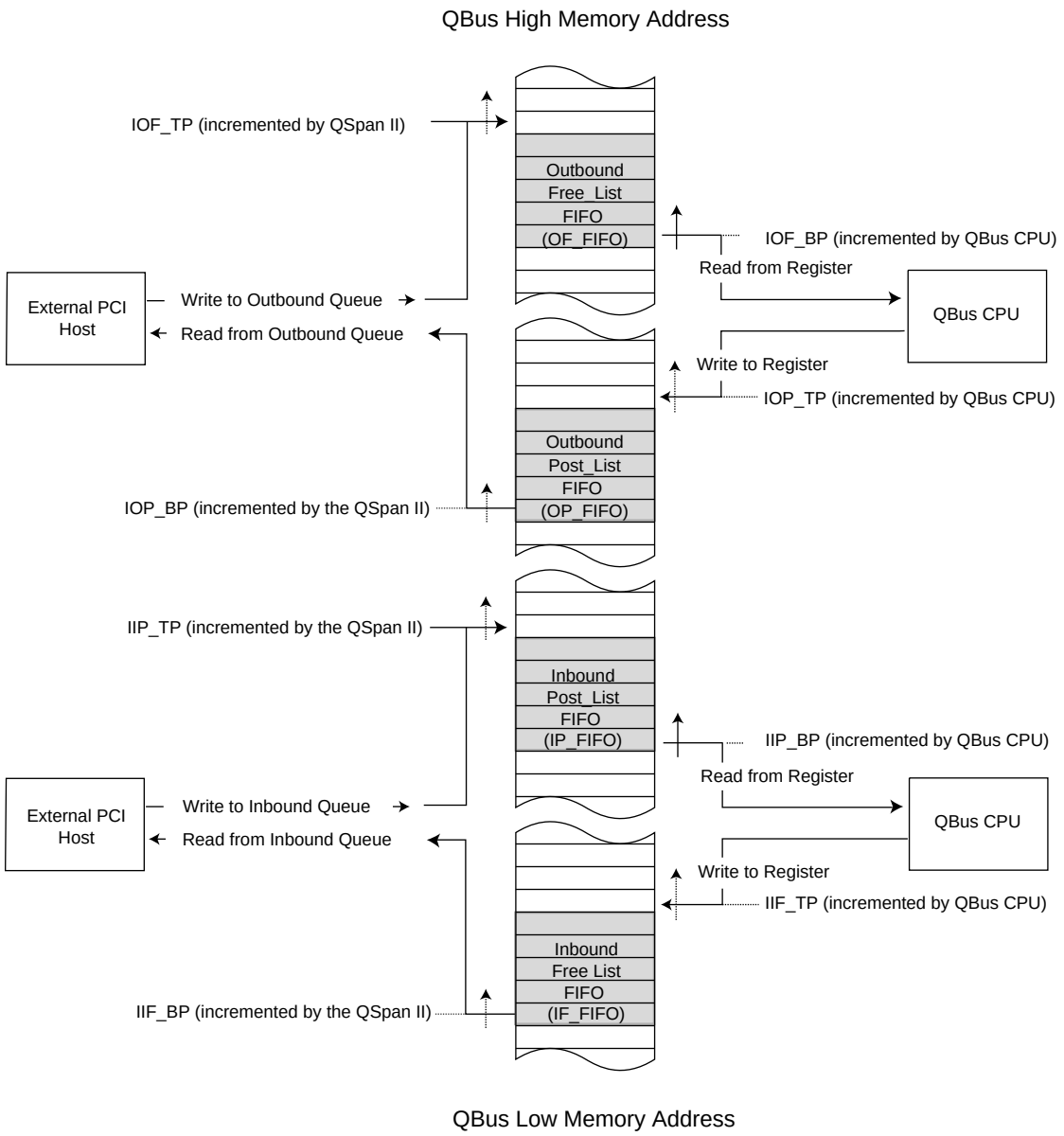

10.3 Outbound Messaging

The Outbound Post-List FIFO (OP_FIFO) contains MFAs for message frames sent to system memory from the QBus Host. The Outbound Free-List FIFO (OF_FIFO) contains MFAs for message frames that are free to be filled by the QBus Host. The QBus Host gets an MFA from the Bottom of the Outbound Free-List FIFO, writes a message to system memory and then posts the MFA to the Top of the OP_FIFO. QSpan II generates a PCI interrupt (if enabled) when an MFA is posted. The host accesses the oldest outbound MFA by reading the outbound queue. The outbound queue is offset 0x044 from the I_2O_BAR at offset 0x010.

© 2019 Renesas Electronics Corporation

QSpan II then supplies the data from the Bottom of the Outbound Post-List FIFO. If the Outbound Post-List FIFO is empty, the QSpan II returns 0xFFFF_FFFF to the PCI Host or IOP on the PCI bus. The PCI host allocates available system message frames to the QBus Host by writing an available MFA to the outbound queue at offset 0x044. QSpan II then writes this MFA to the Top of the Outbound Free-List FIFO in QBus memory.

10.4 I_2O Operation

When the QSpan II is enabled for I_2O operation — I2O Enable (I2O_EN) in register I2O_CS — the base address register for PCI Target Image 0 (PCI_BST0) is moved to the first base address register in the Configuration space (offset 0x010), and is renamed I2O_BAR. The base address register for accessing the QSpan II registers from PCI (PCI_BSM) is then moved from offset 0x010 to 0x018 (for more information, see “I2O Messaging Unit Initialization” on page 386). The QBus translation address and other QBus options can be set in PBTI0_CTL and PBTI0_ADD for message passing from the Host to the QBus memory. The bottom 4 Kbytes of the I2O_BAR is not translated into QBus memory.

In this 4 Kbyte region, 16 bytes are predefined for I_2O operation, offsets 0x030 and 0x034 are used for system interrupt generation, and offsets 0x040 and 0x044 are defined as the location of the Inbound and Outbound queues. Each inbound MFA is the offset between the start of the memory region specified by the I_2O base address Configuration register (I2O_BAR) and the start of the message. The inbound MFAs must be above the 4 Kbyte region (for example, Inbound MFAs must be greater than FFFh). Each outbound MFA is specified as the offset from Host memory location (0000_0000h) to the start of the message frame in shared Host memory.

10.5 Summary of I_2O Operations

10.5.1 Initialization

The following initialization operation allows the QSpan II to take part in I_2O operations:

1. The QBus Host reserves a number of memory locations in its local memory to hold inbound I_2O messages. The locations do not have to be contiguous. It then creates a FIFO (IF_FIFO) that contains the address to these memory locations (MFAs). It creates another FIFO (IP_FIFO) that contains the Inbound Post_List MFAs. The QBus Host then creates two more circular FIFOs: OF_FIFO and OP_FIFO.

   All four FIFOs must be the same size. They can be anywhere in a 1 Mbyte window (from the base address defined by QIBA in I2O_CS register), without overlapping. The four FIFOs are required to be in the same 1 Mbyte window so that the upper 12 bits ([31..20]) are the same for the eight pointers maintained by the QSpan II.

© 2019 Renesas Electronics Corporation

2. The QBus Host then programs the Inbound Free_List pointers in the QSpan II registers. The I_2O Inbound Free_List Bottom Pointer (IIF_BP) must point to the I_2O location in the Inbound Free_List FIFO (for example, if the location of IF_FIFO is at QIBA, then IIF_BP = 0). The I_2O Inbound Free_List Top Pointer (IIF_TP) must point to the first free entry (for example, last available MFA + 1).

   If the size of the FIFO is 256, and there are 200 MFAs, then IIF_TP = 201 * 4 = 804 (0x324). The Inbound Post_List Top and Bottom (IIP_TP, IIP_BP) pointers must also be programmed (for example, if the IP_FIFO starts at (QIBA + 2048), then IIP_BP = IIP_TP = 2048). The four Outbound pointers: I_2O Outbound Post_List Top Pointer (IOP_TP), I_2O Outbound Post_List Bottom pointer (IOP_BP), I_2O Outbound Free_List Top Pointer (IOF_TP), I_2O Outbound Free_List Bottom Pointer (IOF_BP), must be programmed to their respective starting offset—from the QIBA (for example, if OP_FIFO starts at (QIBA + 4096) and OF_FIFO starts at (QIBA + 6144), then IOP_BP = IOP_TP = 4096, and IOF_BP = IOF_TP = 6144).

   If the QBus I_2O base address is 0xA000_0000, then QSpan's I_2O registers will contain the following for the above settings.
   I2O_CS: QIBA = 0xA00, FIFO_SIZE = 0x0
   IIF_BP = 0xA000_0000, IIF_TP = 0xA000_0324 (IF_FIFO contains 200 MFAs)
   IIP_BP = 0xA000_0800, IIP_TP = 0xA000_0800 (IP_FIFO is empty)
   IOP_BP = 0xA000_1000, IOP_TP = 0xA000_1000 (OP_FIFO is empty)
   IOF_BP = 0xA000_1800, IOF_TP = 0xA000_1800 (OF_FIFO is empty).

   If the Top and Bottom pointers are equal, the FIFO can either be full or empty. QSpan II assumes that the FIFO is empty when the pointers are equal at start-up. To indicate that the FIFO (for example, the IF_FIFO) is full at start-up, the QBus Host needs to first program the Top pointer to the top of the FIFO, and then increment it by four. This places the Top pointer at the bottom of the FIFO.

3. The QBus Host enables I_2O (bit I2O_EN in register I2O_CS) and enables access from the PCI bus to the QSpan II (clear bit PCI_DIS in register MISC_CTL2).

4. The Host, with a mechanism similar to step 1 above, reserves a number of memory locations to hold Outbound I_2O messages. It then writes the address of these locations (MFAs) to the OF_FIFO (see "Inbound I2O Message" on page 136. This causes the QSpan II to update the IOF_TP pointer (for example, if the Host writes 100 MFAs into OF_FIFO, then IOF_TP = 6144 + 4*101 = 6548).

   QSpan II's registers now contain the following:
   IOF_BP = 0xA000_1800
   IOF_TP = 0xA000_1994 (OF_FIFO contains 100 MFAs)

© 2019 Renesas Electronics Corporation

10.5.1.1 Inbound I_2O Message

1. The host gets an MFA by reading from offset 0x040 from the first Base Address Register (I2O_BAR). This causes the QSpan II to generate a QBus delayed read cycle at address (IIF_BP = 0xA000_0000) to get the first MFA. When the read data is available, the QSpan II returns the data to the Host. QSpan II also increases the IIF_BP pointer by 4 (IIF_BP = 0xA000_0004).
2. The Host writes the I_2O message to the shared local memory through the QSpan II using the offset specified by the MFA from I2O_BAR.
3. The Host then places the MFA into the IP_FIFO (for example, the Host writes to offset 0x040 with MFA as the data). This causes the QSpan II to generate a QBus delayed write cycle at address (IIP_TP = 0xA000_0800) with MFA as the data. QSpan II also increases the IIP_TP pointer by four (IIP_TP = 0xA000_0804). QSpan II can be programmed to generate a QBus interrupt when the IP_FIFO is written with a new MFA. It also sets the Inbound Post_List New Entry Interrupt Status (IPN_IS) bit in the INT_STAT register (see Table 119 on page 260).
4. The QBus Host is notified of the Inbound message either through the QBus interrupt, or by polling IP_FIFO Empty Status (IP_E) bit in the I2O_CS register (see Table 109 on page 246). It then reads the QSpan II's IIP_BP register to get the next Bottom pointer in the Inbound Post_List FIFO (this is a normal QBus register access). The QBus Host can then get the MFA for the message and process the message. The QBus Host must complete a write to increment the IIP_BP by four (IIP_BP = 0xA000_0804) to point to the next MFA in the IP_FIFO.

   The incrementing is completed by the QBus Host. It writes the new value of the pointer to the IIP_BP register.

5. The QBus Host releases the used MFA by writing the MFA back to the IF_FIFO (at the Top pointer). It must also increment the QSpan II's IIF_TP pointer by four (IIF_TP = 0xA000_0328) using a QBus register access.

10.5.1.2 I_2O Outbound Message

1. The QBus Host gets a pointer to the location of an MFA for the outbound message by reading the QSpan II's Outbound Free_List Bottom Pointer (IOF_BP). It needs to increase the IOF_BP by four (IOF_BP = 0xA000_1804) to point to the next MFA (these are done through QBus register access).
2. The QBus Host writes the message to the host memory location pointed by the MFA.
3. The QBus Host places the MFA in the OP_FIFO (using the Top pointer). It also needs to increment the QSpan II's Outbound Post_List Top Pointer register (IOP_TP) by four (IOP_TP = 0xA000_1004). QSpan II generates a PCI interrupt (if not masked by the bit OP_IM in register I2O_OPIM) when the OP_FIFO is not empty and sets the OP_ISR bit in the I2O_OPIS register (see Table 150 on page 294).

© 2019 Renesas Electronics Corporation

4. The Host is notified of the Outbound message either through the PCI interrupt or by polling the status bit. It then initiates a PCI memory read access at offset 0x044 from the first BAR in the QSpan II's Configuration space (I2O_BAR) to get the MFA. This causes the QSpan II to generate a QBus delayed read cycle at address (IOP_BP = 0xA000_1000). When the read data is returned to the QSpan II, the data is passed back to the Host. QSpan II also increases the IOP_BP by four (IOP_BP = 0xA000_1004). The OP_ISR status bit is cleared if the OP_FIFO is empty.
5. The Host processor then reads the message pointed by the MFA and consumes it.
6. The Host then releases the used MFA by writing to offset 0x044 from I2O_BAR (see Table 74 on page 207).

   This causes QSpan II to generate a QBus write cycle at address (IOF_TP = 0xA000_1994) with the MFA as the data. Upon completion of the write, the QSpan II increments the IOF_TP by four (IOF_TP = 0xA000_1998).

The four pointers updated automatically by QSpan II are IIF_BP, IIP_TP, IOP_BP and IOF_TP. When the pointer is at the top of the FIFO, the next increment puts it at the bottom of the FIFO: the increments are accomplished on a modulo boundary of the FIFO_SIZE. The other four pointers (IIF_TP, IIP_BP, IOP_TP and IOF_BP) must be incremented by the QBus Host. This is achieved by completing a QBus register write with the new pointer value. The two Top pointers incremented by the QSpan II (IIP_TP and IOF_TP) are not incremented if the corresponding FIFO becomes full. Likewise, the two Bottom pointers (IIF_BP and IOP_BP) are not incremented if the corresponding FIFO is empty.

10.6 I_2O Interrupts

QSpan II provides status bits in I_2O Control and Status (I2O_CS) register for each of the four I_2O list FIFOs to indicate if they are empty or full (see Table 100 on page 236). A PCI interrupt can be generated when the Outbound Post_List FIFO contains MFAs (for example, when the Outbound Post_List FIFO is not empty). The interrupt can be masked by setting the OP_IM bit in I2O_OPIM register. The corresponding status bit is in I2O_OPIS register. A copy of this status bit is also provided in the INT_STAT register.

To generate a QBus interrupt when a new MFA is posted into the Inbound Post_List FIFO, set the IPN_EN bit in INT_CTL (see Table 120 on page 263). If the interrupt is generated, the IPN_IS status bit is set. The QBus interrupt can be negated by writing a 1 to the IPN_IS status bit.

The following four conditions can also cause external interrupts: Inbound Free_List FIFO empty, Outbound Free_List FIFO empty, Inbound Post_List FIFO full and Outbound Free_List FIFO full. These interrupts are enabled by setting the corresponding bits in the INT_CTL and INT_DIR registers.

© 2019 Renesas Electronics Corporation

© 2019 Renesas Electronics Corporation

Chapter 11: PCI Bus Arbiter

This chapter explains the QSpan II's PCI bus arbiter. The following topics are discussed:

- "Arbitration Scheme" on page 140
- "Bus Parking" on page 142

11.1 Overview

QSpan II has an integrated PCI bus arbiter with dedicated support for the QSpan II PCI master, and up to seven external Masters (see Figure 19). The PCI bus arbiter uses a fairness algorithm to prevent deadlocks.

QSpan II's PCI bus arbiter is enabled at power-up if the PCI_ARB_EN pin is sampled high at the negation of Reset. The request lines of the external bus Masters can be connected to the REQ# and EXT_REQ#[6:1] pins. Any unused request pins must be externally pulled up. The grant lines of the external bus Masters can be connected to GNT# and EXT_GNT#[6:1]. If an external arbiter is used, the QSpan II uses the REQ#/GNT# line to acquire the PCI bus. QSpan II drives the unused EXT_REQ#[6:1] and EXT_GNT#[6:1] high when an external arbiter is used.

© 2019 Renesas Electronics Corporation

Figure 19: PCI Bus Arbiter — Functional Diagram

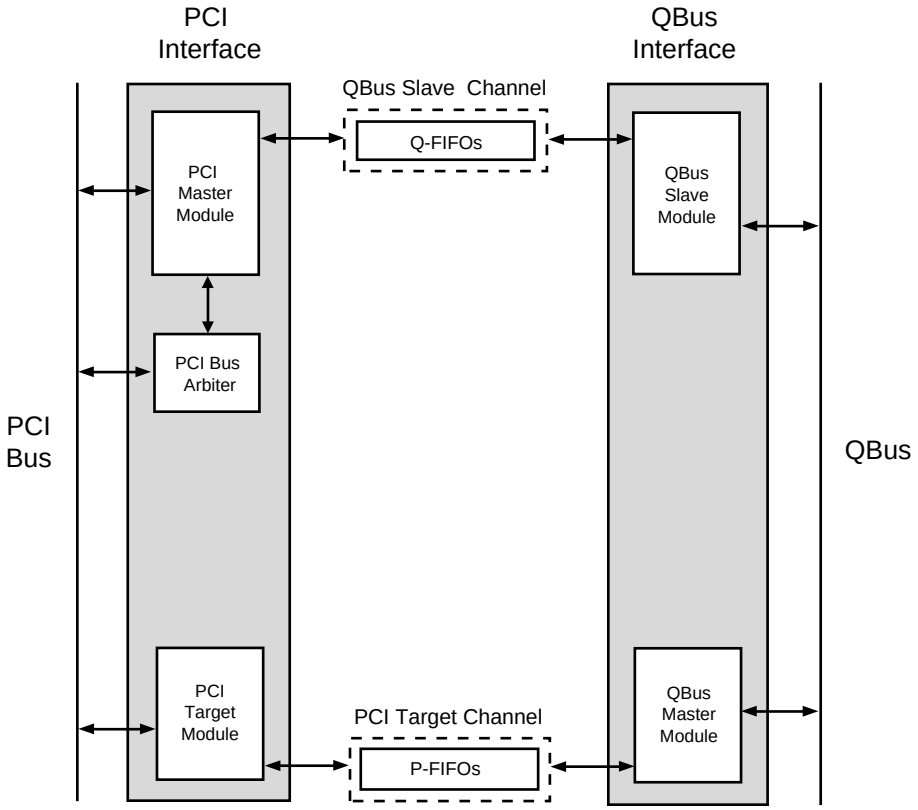

11.2 Arbitration Scheme

To maintain arbitration fairness, the PCI bus arbiter assigns bus masters to one of two priority levels: Level 0 or Level 1 (see Figure 20). Bus Masters assigned to Level 0 are of lower priority than Masters assigned to Level 1. Bus Masters assigned to the same level have equal priority in the arbitration scheme. Bus Masters on Level 0 get a single access during each round-robin arbitration on Level 1. Arbitration is performed among Masters asserting request to the QSpan II's PCI bus arbiter. The bus arbiter removes a grant to a master if it has not started an access after its grant has been issued and the bus is in the idle state for 16 clock cycles.

© 2019 Renesas Electronics Corporation

Figure 20: PCI Bus Arbiter — Arbitration Scheme

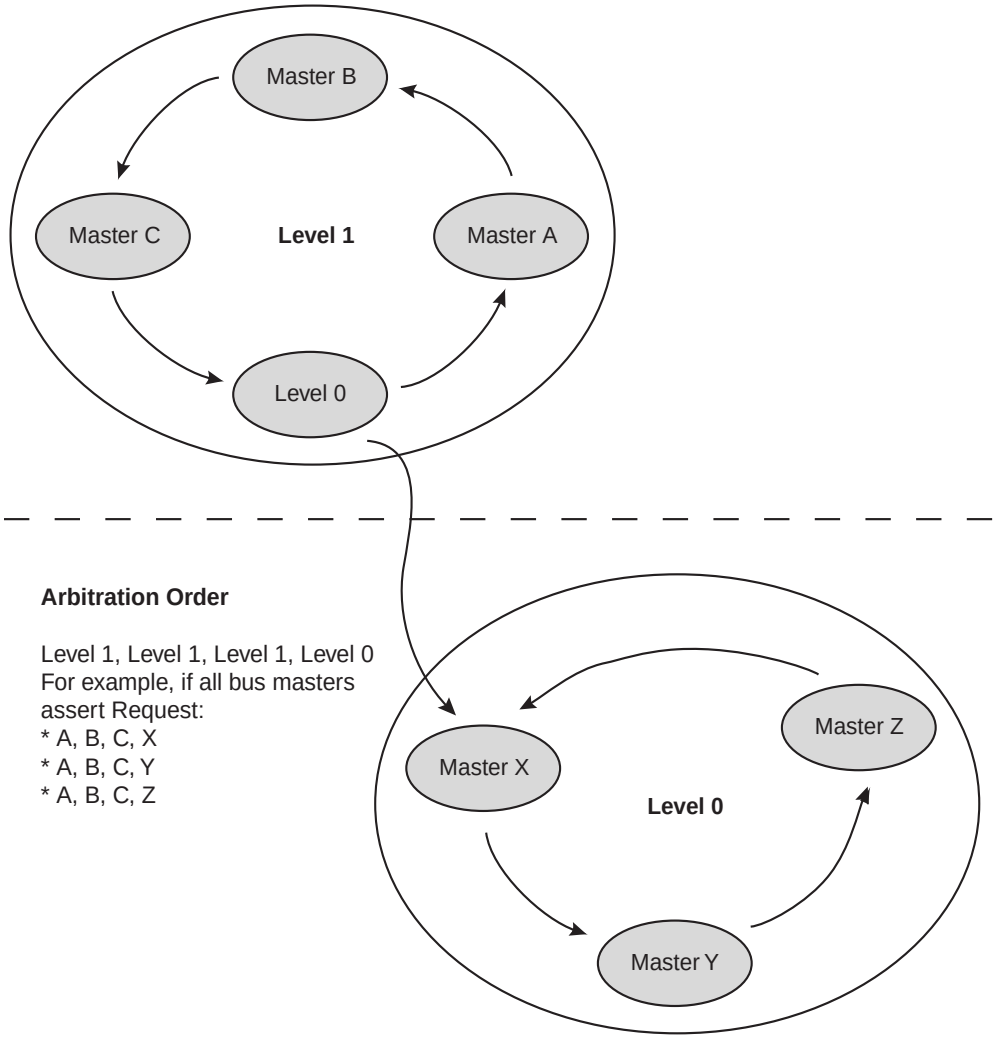

To assign a priority level, set the Arbitration Level priority (Mx_PRI) bit in the PARB_CTL register (see Table 131 on page 281). Background arbitration is implemented, which means arbitration occurs during the previous access so that no PCI cycles are consumed due to arbitration; except when the bus is in the idle state.

In general, the arbiter negates the current grant when the current master asserts FRAME#. It issues a new grant when the current master negates FRAME# if there is a pending new request. If the bus is idle when a new request is received, the arbiter negates the current grant, then issues a new grant on the next clock.

© 2019 Renesas Electronics Corporation

11.3 Bus Parking

Bus parking is supported on the last bus master or on a pre-determined bus master. This depends on the setting of the PCI Bus Parking Scheme (PARK) bit and the Select Master for PCI Bus Parking (BM_PARK) bit in the PARB_CTL register (see Table 131 on page 281). If PARK is set to 0, the last bus master is parked. If PARK is set to 1, the bus master identified by BM_PARK is parked.

Bus parking is performed when there are no requests and the bus is idle.

© 2019 Renesas Electronics Corporation

Chapter 12: CompactPCI Hot Swap Friendly Support

This chapter discusses CompactPCI Hot Swap Friendly capabilities of the QSpan II. The following topics are explained:

- "Hot Swapping with the QSpan II" on page 144
- "CompactPCI Hot Swap Card Insertion" on page 145
- "CompactPCI Hot Swap Card Extraction" on page 147

12.1 Overview

QSpan II is a CompactPCI Hot Swap Friendly Device (see Figure 21). *CompactPCI's Hot Swap Specification* defines a process for installing and removing adapter boards without adversely affecting a running system. QSpan II supports programmable access to Hot Swap services. This allows system reconsideration and fault recovery to take place with no system down time and minimum operator interaction.

Hot Swap defines three classes of devices: Hot Swap Capable, Hot Swap Friendly and Hot Swap Ready. Hot Swap Friendly device requirements include the following:

- Hot Swap Control/Status Register and Extended Capabilities Pointer: This supports the use of the Hot Plug System Driver.
- Support of the Hot Swap event pin ENUM#: This signal informs the Host that the configuration of the system has changed; that is, the card has been inserted or is about to be removed.
- Support for sensing the switch connected to the ejector latch, and controlling the LED: Two pins are used for this functionality, HS_SWITCH (Input) to detect the state of the ejector latch and HS_LED (Open-Drain Output) to control the LED.

© 2019 Renesas Electronics Corporation

Figure 21: CompactPCI Hot Swap — Functional Diagram

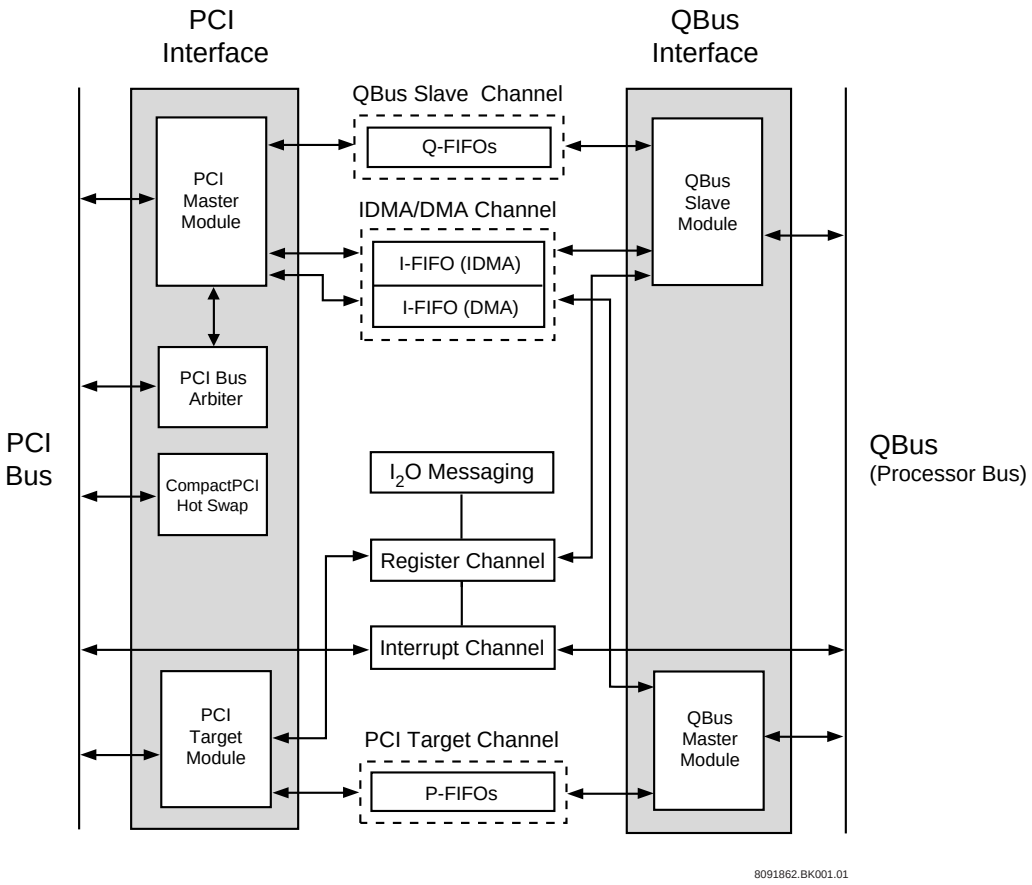

12.2 Hot Swapping with the QSpan II

The *CompactPCI Hot Swap Specification* defines a switch located in the ejector handle that indicates to QSpan II if the ejector handle is open or closed. The specification also defines a LED that can be controlled by hardware and software, by setting the LED On/Off (LOO) bit in the CPCI_HS register (see Table 86 on page 219). QSpan II drives the HS_LED signal low to turn on the LED during the Physical and Hardware Connection process (when HS_HEALTHY_ is high), and when the LOO bit is set, to minimize the number of external components. A blue LED with an internal resistor can be directly connected between the 5V rail and the HS_LED pin.

A low value on HS_SWITCH input indicates that the ejector latch is open. A high value on HS_SWITCH indicates that the ejector latch is closed. QSpan II tri-states the HS_LED signal low when the LED is supposed to be turned-off during normal operation.

© 2019 Renesas Electronics Corporation

QSpan II also monitors the board healthy signal (HEALTHY# in the Hot Swap specification). This connects to QSpan II's input signal, HS_HEALTHY_. QSpan II internally OR's the HS_HEALTHY_ and PCI Reset (RST#) to generate an internal reset. When HS_HEALTHY_ is high, the QSpan II is in reset and all outputs are tri-stated (except for HS_LED). QSpan II will drive out RESETO_ low due to a PCI Reset (RST# low) if HS_HEALTHY_ is low, indicating that the back-end is powered up. QSpan II samples the power-up option pins (BDIP_, PCI_DIS, etc.) on HS_HEALTHY_ going low (as well as RST# going high or RESETI_ going high).

12.3 CompactPCI Hot Swap Card Insertion

When a CompactPCI add-in card containing QSpan II is inserted into a powered-on system, power and ground are first supplied to the QSpan II. The remaining subsystem components do not have power. From the long pins, the HEALTHY# signal is generated and applied to QSpan II (HS_HEALTHY_). This causes the QSpan II to generate an internal reset, to drive HS_LED low, and to tri-state all other outputs.

When the board is fully inserted and power is supplied to the rest of the subsystem (or back-end), the HS_HEALTHY_ can be asserted low, causing the QSpan II to come out of reset. If the PCI Reset (RST#) is active low at this time, the QSpan II drives out RESETO_ low until RST# is negated. On the assertion of HS_HEALTHY_ or the negation of RST# (if RST# was active when HS_HEALTHY_ was asserted), the QSpan II loads from the EEPROM (if enabled). After the EEPROM loading, the QSpan II sets the Insertion (INS) bit in CPCI_HS register, signals the Host using ENUM# (if enabled), and accepts Configuration cycles from the Host.

QSpan II can also be set — using a power-up option, PCI_DIS — to hold off asserting ENUM# and retry Configuration cycles while the QBus Host programs the QSpan II's Configuration registers. At the end of this programming, the PCI_DIS bit in the MISC_CTL2 register (see Table 130 on page 278) can be cleared to enable the QSpan II to set the INS bit, to assert ENUM#, and to accept Configuration cycles from the Host.

The Host can clear ENUM# by writing to the INS or EIM bit in CPCI_HS register. The Host can then configure the QSpan II-based add-in card.

© 2019 Renesas Electronics Corporation

Table 45: Insertion Sequence

Event	HS_ HEALTHY_	ENUM#	HS_LED	HS_SWITCH	LED	INS	EXT	LOO	EIM
Long pins connect	High	Z	L	open	on	0	0	0	0
Medium pins connect	High	Z	L	open	on	0	0	0	0
Short pins connect	High	Z	L	open	on	0	0	0	0
HS_ HEALTHY_ asserted[a]	Low	Z	L	open	on	0	0	0	0
Turn off LED	Low	Z	Z	open	off	0	0	0	0
Close Ejector latch	Low	Z	Z	closed	off	0	0	0	0
Drive ENUM#	Low	L	Z	closed	off	1	0	0	0
Host clears ENUM#	Low	Z	Z	closed	off	0	0	0	0

a. QSpan II will load from external EEPROM, if enabled.

Table Legend of Insertion Sequence:

- HS_LED = L ⇒LED on

  HS_LED = Z ⇒ LED off
- HS_HEALTHY_ = High ⇒ Back-end powered down

  HS_HEALTHY_ = Low ⇒ Back-end powered up
- The bits INS, EXT, LOO and EIM are defined in CPCI_HS register.

© 2019 Renesas Electronics Corporation

Figure 22: Hot Swap Card Insertion[1]

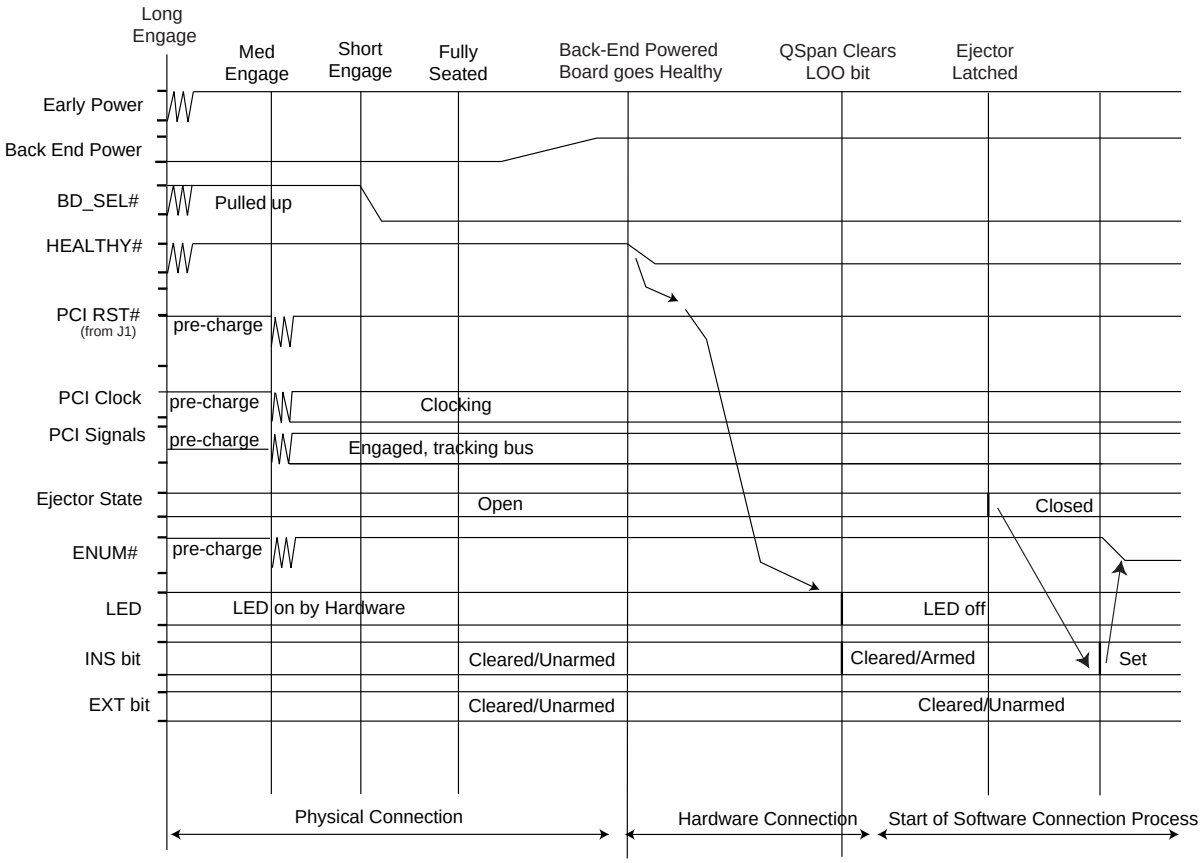

12.4 CompactPCI Hot Swap Card Extraction

The extraction process is signaled by opening the ejector handle; this causes the HS_SWITCH to be low. When QSpan II detects the falling edge on HS_SWITCH, it starts the extraction process. It sets the EXT bit in CPCI_HS (see Table 86 on page 219) and asserts ENUM#, if it is enabled.

After sensing ENUM# or detecting the EXT bit set in CPCI_HS (from polling), the Host software writes to the EXT bit to clear the EXT bit and negate ENUM#. It also brings the card to a quiescent state and then writes to the LOO bit to turn on the LED. This indicates to the operator that the board is ready to be extracted.

1. This graphic is from the *CompactPCI Hot Swap Specification*.

© 2019 Renesas Electronics Corporation

As the board is removed from the system, the short pin breaks contact and the HS_HEALTHY_ pin is negated, causing the QSpan II to tri-state the outputs (except HS_LED, to keep the LED on until the long pins disengage).

Instead of taking the board out when the LED is on, the operator can close the ejector latch to indicate an insertion process. In this case, the insertion sequence will begin from event Close Ejector Latch, and the QSpan II will not load from the EEPROM unless HS_HEALTHY_ is negated or RST# is asserted prior to closing the ejector latch.

Table 46: Extraction Sequence

Event	HS_ HEALTHY_	ENUM#	HS_LED	HS_SWITCH	LED	INS	EXT	LOO	EIM
Normal Operation	L	Z	Z	closed	off	0	0	0	0
Ejector Open	L	Z	Z	open	off	0	0	0	0
Drive ENUM#	L	L	Z	open	off	0	1	0	0
Host detects ENUM#	L	L	Z	open	off	0	1	0	0
Host clears ENUM#	L	Z	Z	open	off	0	0	0	0
Host sets LOO	L	Z	L	open	on	0	0	1	0
Short pins break[a]	H	Z	L	open	on	0	0	0	0
Medium pins break	H	Z	L	open	on	0	0	0	0
Long pins break	X	X	X	X	X	X	X	X	X

a. The card can be inserted at this point, then the insertion process is started from “Close Ejector Latch” of the insertion sequence.

Table Legend of Extraction Sequence:

- HS_LED = L --> LED On,

  HS_LED = Z --> LED Off.
- The bits INS, EXT, LOO and EIM are defined in CPCI_HS register.
- HS_HEALTHY_ = H -->?Back-end powered down,

  HS_HEALTHY_ = L --> Back-end powered up

© 2019 Renesas Electronics Corporation

Figure 23: Hot Swap Card Extraction[1]

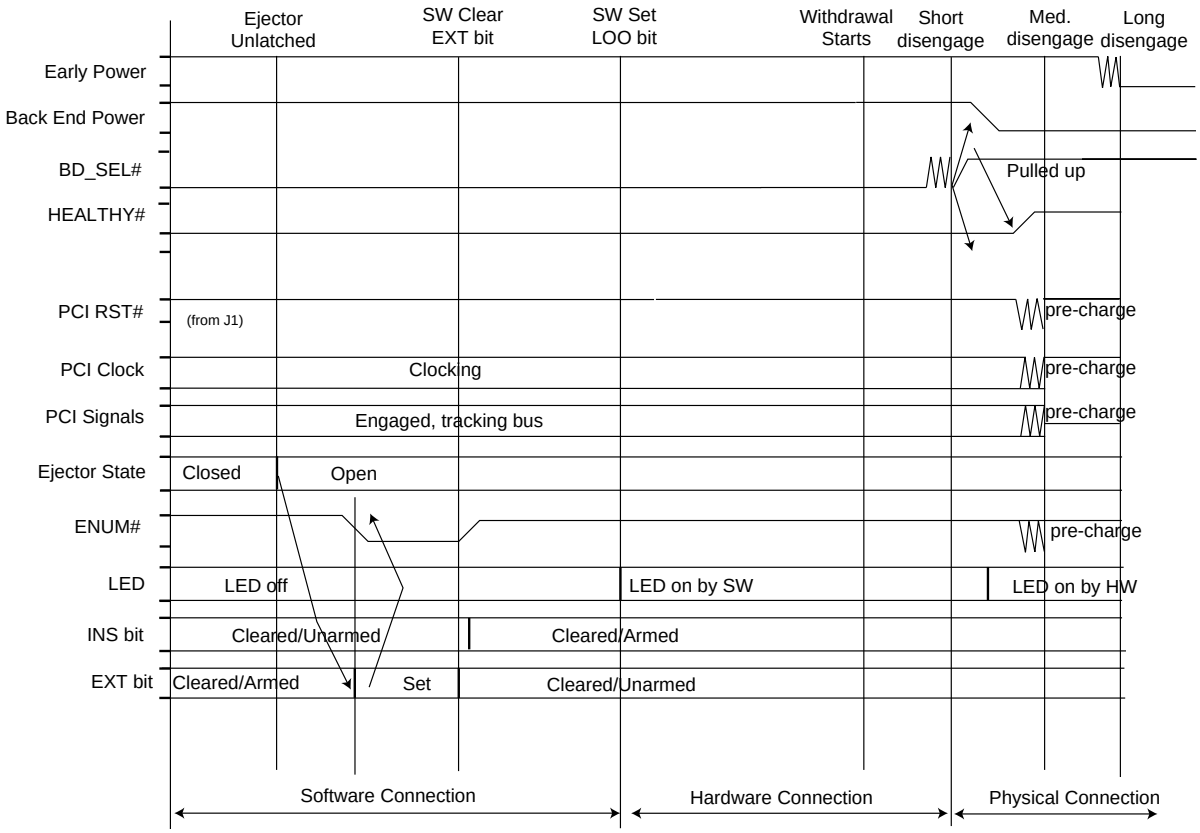

1. This graphic is from the *CompactPCI Hot Swap Specification.*

© 2019 Renesas Electronics Corporation

© 2019 Renesas Electronics Corporation

Chapter 13: PCI Power Management Event Support

This chapter explains PCI Power Management Support for the QSpan II. It focusses on the Power Management Support output signal (PME#).

13.1 Overview

QSpan II provides a PCI Power Management interface that is compliant with *PCI Bus Power Management Interface Specification 1.1*. This interface enables the operating system to control the hardware — an add-in card, for example — that implements power saving features in a platform-independent manner. The Power Management interface supports the minimum requirements of powered-up and sleep, or low power, states.

QSpan II does not implement any power saving features in silicon; it merely passes the Power Management information between the Host OS and the I/O subsystem. The Power Management registers can be loaded from the EEPROM or programmed by the QBus Host before initialization by the Host.

13.2 Power Management Event (PME#) Support

The QSpan II provides support for the PME# output signal. This signal is asserted to request a change in its current power management state, and/or to indicate that a power management event has occurred.

QSpan II asserts PME# when the PME_EN bit is set to 1 in the Power Management Control and Status (PCI_PMCS) register, and if the Power State bits (PWR_ST in PCI_PMCS) are written to the value in PME_support field in PCI_PMCS register by the QBus Host. The PME Status bit in PCI_PMCS is set in the above case regardless of the setting of PME_EN. QSpan II negates PME# if the PME Status bit is cleared or PME_EN bit is disabled.

© 2019 Renesas Electronics Corporation

PME# has additional electrical requirements beyond standard an open drain signal that allows it to be shared between devices which are powered off, and those that are powered on. This isolation circuitry must be implemented externally on the add-in card.

Transition between the different power states of the add-in card can be initiated by either the Host or the QBus Host writing to the Power State bits in the Power Management Control and Status Register (PCI_PMCS). QSpan II provides multiple options to allow maximum flexibility:

- D0 to D3hot Transition
  a. Host initiated:

     QSpan II generates a QINT_ if PSC_EN bit in INT_CTL register is set.

  b. QBus Host initiated:

     QSpan II sets PME_ST bit in PCI_PMCS register (if PME_SP[3]=1, in PCI_PMC register); it also asserts PME# (if PME_EN=1, in PCI_PMCS).

- D3hot to D0 Transition
  a. Host Initiated:

     If the add-in card needs to be reset, then setting the Power State Change (PSC_QRST) bit in MISC_CTL2 register causes the QSpan II to generate an internal QSpan II reset. It also causes RESETO_ signal to be asserted (for 512 to 1024 PCI clocks). QSpan II will load from EEPROM, if enabled.

     If the add-in card should not be reset, then the QSpan II can be programmed to generate a QINT_ (PSC_EN bit is set in INT_CTL register).

  b. QBus Host initiated (QBus Host powered-up and configured):

     QBus Host writes to the PWR_ST bits in PCI_PMCS register to change the power state. QSpan II then sets PME_ST bit in PCI_PMCS register (if PME_SP[0]=1, in PCI_PMC register), and it also asserts PME# (if PME_EN=1, in PCI_PMCS).

  c. Add-in card initiated (QBus Host in sleep-mode):

     QSpan II can be programmed to generate a PME# from the assertion of QINT_ in the D3hot Power state (if QINT_PME=1, in MISC_CTL2 register, PME_SP[3]=1, in PCI_PMC and PME_EN=1, in PCI_PMCS). PME_ST bit will also be set.

     The Host can then write to the PWR_ST bits in PCI_PMCS to change it to D0, and generate an add-in card reset.

For more information about PCI power management states, see the *PCI Bus Power Management Interface Specification 1.1*.

© 2019 Renesas Electronics Corporation

Chapter 14: Reset Options

This chapter discusses Reset options for the QSpan II. The following topics are examined:

- "Types of Resets" on page 153
- "Configuration Options at Reset" on page 155

14.1 Types of Resets

QSpan II can be reset from the QBus or the PCI bus through hardware. QSpan II uses four pins and one register for reset operation. The reset pins are listed in Table 47.

Table 47: Hardware Reset Mechanisms

Pin Name	Interface	Direction	Function
RST#	PCI	Input	Resets all the QSpan II circuits and registers and asserts RESETO_ when HS_HEALTHY_ is low. RESETO_ remains asserted until RST# is released. Also clears the SW_RST bit in the MISC_CTL (see Table 127 on page 274) register.
RESETI_	QBus	Input	Resets most of the QSpan II circuits and registers (see Appendix A: "Registers" on page 193)
RESETO_	QBus	Output	Resets devices on the QBus
HS_HEALTHY_	PCI	Input	This input indicates the state of the back-end system.

The term Reset is used when PCI Reset (RST#) or QBus Reset input RESET1_ is driven low or HS_HEALTHY_ is driven high.

© 2019 Renesas Electronics Corporation

The QBus Software Reset Control (SW_RST) bit in the MISC_CTL register (see Table 127 on page 274) controls the QBus Reset output (RESETO_). One of the uses of this mechanism is to keep the QBus in reset while an operating system and driver are downloaded to on-board memory. When a 1 is written to the SW_RST bit, the QSpan II asserts RESETO_ and keeps it asserted until the software reset state is terminated.

There are three ways to cause the QSpan II to terminate the software reset state:

1. Clear the SW_RST bit by writing 0 to it. In this case, RESETO_ is immediately negated.
2. Assert RESETI_. In this case, the SW_RST bit is immediately cleared (set to 0) and RESETO_ is immediately negated.
3. Assert RST#. In this case, SW_RST is immediately cleared (set to 0), however RESETO_ continues to be asserted until RST# is negated.

We do not recommend RESETO_ being looped back to RESETI_. In addition, asserting the SW_RST bit does not cause an internal reset of the QSpan II.

14.1.1 PCI Transactions during QBus Reset

Assertion of RESETI_ may interfere with the QSpan II's response to PCI Masters. If a PCI master attempts to access the QSpan II while RESETI_ is asserted, the QSpan II will not decode the incoming cycle and a Master-Abort will occur on the PCI bus. If the QSpan II has already been selected by a PCI master (QSpan II has asserted DEVSEL#), then the QSpan II will immediately negate DEVSEL#, but TRDY# and STOP# will not be asserted by the QSpan II.

14.1.2 IDMA Reset

IDMA reset issues are discussed in "IDMA Errors, Resets, and Interrupts" on page 89.

14.1.3 Clocking and Resets

The PCLK can operate anywhere from DC to 33 MHz. The maximum QCLK frequency depends on the host processor. For MPC860 applications, the maximum QCLK frequency is 50 MHz. For MC68360 applications, the maximum frequency is 33 MHz. The QCLK input is not required to be operating to successfully complete QSpan II resistor accesses from the PCI bus. QSpan II supports asynchronous assertion and negation of Resets. Refer to the tables in "Signals and DC Characteristics" on page 177 for a description of the state of each QSpan II pin after reset.

When a PCI reset (RST#) is asserted and HS_HEALTHY_ is low, the QSpan II's RESETO_ signal will be asserted and negated as shown in Appendix B: "Timing" on page 299.

© 2019 Renesas Electronics Corporation

The QCLK and PCLK inputs are necessary for software resets. That is, these clocks are required in order for the QSpan II to negate RESETO_. This is due to the fact that for a software reset, the QSpan II's registers must be accessed to cause RESETO_ to negate. If the QCLK or PCLK input stops toggling then it is impossible to write to the QSpan II's registers to negate RESETO_.

QSpan II’s QCLK input must be identical to the QBus processor’s clock source if transactions are occurring on the QBus. Many applications use an external low skew PLL clock buffer to generate the clock outputs for the board (for example, QCLK input for QSpan II). If the buffer’s clock outputs are not locked to the clock input frequency, then transactions cannot occur on the QBus — QSpan II must not detect AS_ or TS_ being asserted.

14.2 Configuration Options at Reset

The following QSpan II configuration options can be determined at Reset:

- whether the QSpan II is enabled as a PCI bus master
- the master and slave modes of the QBus, which determines the type of cycles that the QSpan II can generate as a master and accept as a slave
- whether the QSpan II loads registers from an EEPROM at reset (see “EEPROM Loading” on page 156 and “PCI Register Access Option” on page 156)
- the test mode (see “Test Mode Pins” on page 157)
- PCI access to QSpan II registers
- PCI bus arbiter functionality

14.2.1 PCI Bus Master Reset Option

If BM_EN/FIFO_RDY_ is sampled as high while reset is asserted, the QSpan II will set the Bus Master (BM) bit in the PCI_CS register (see Table 70 on page 201). This enables the QSpan II as a PCI bus master. If this pin is not connected, an internal pull-down causes the QSpan II to power-up with the BM bit set to 0.

© 2019 Renesas Electronics Corporation

14.2.2 QBus Master and Slave Modes

QSpan II has four Master and Slave modes that are determined by the BDIP_ and the SIZ[1] signals at reset. The QBus can be in MC68360 (QUICC), MPC860 (PowerQUICC) or M68040 Master mode. The QBus Slave Module is always capable of accepting MC68360 signals and either MPC860 or M68040 signals. These reset options are listed in Table 48.

Table 48: Reset Options for QBus Master and Slave Modes[a]

Reset sampling		Master Mode	Slave Mode
BDIP_	SIZ[1]		
0	0	MC68360	MC68360 and M68040
0	1	MC68360	MC68360 and MPC860
1	0	M68040	MC68360 and M68040
1	1	MPC860	MC68360 and MPC860

a. These options are reset whenever the QSpan II is reset.

14.2.3 EEPROM Loading

If either ENID or SDA is sampled high at reset, then the QSpan II will download register information from the EEPROM (see Chapter 9: “The EEPROM Channel” on page 121).

14.2.4 PCI Register Access Option

If PCI_DIS is sampled high at reset, the QSpan II will retry all PCI accesses until the PCI Access Disabled (PCI_DIS) bit in MISC_CTL2 is set to 0 by the QBus processor.

14.2.5 PCI Bus Arbitration Option

If PCI_ARB_EN is sampled high at reset, the QSpan II’s PCI bus arbiter is enabled and will function as the PCI bus arbiter (for more information, see Chapter 11: “PCI Bus Arbiter” on page 139).

© 2019 Renesas Electronics Corporation

Chapter 15: Hardware Implementation Issues

This chapter briefly describes hardware implementation issue for the QSpan II. The following topics are discussed:

- "Test Mode Pins" on page 157
- "JTAG Support" on page 158
- "Decoupling Capacitors" on page 158

15.1 Test Mode Pins

QSpan II can operate in normal mode or test mode. In test mode, a NAND tree is activated and all outputs are tristated except for the SCL output pin. The output of the NAND tree is on the SCL pin.

QSpan II has two test mode input pins (TMODE[1:0]). For normal operations these inputs must be pulled down. The following table indicates the operation modes of the QSpan II as a function of the TMODE[1:0] input. At reset the TMODE[1:0] inputs are latched by the QSpan II to determine the mode of operation. QSpan II remains in this mode until the TMODE[1:0] inputs have changed and a reset event has occurred.

Table 49: Test Mode Operation

TMODE[1:0]	Operation Mode
00	Normal Mode
01	Reserved
10	Reserved
11	NAND Tree/Tristate Outputs

© 2019 Renesas Electronics Corporation

15.2 JTAG Support

The QSpan II includes dedicated user-accessible test logic that is fully compatible with the IEEE 1149.1 Standard Test Access Port and Boundary Scan Architecture. The following pins are provided: TCK, TDI, TDO, TMS, and TRST#.

There is an internal pull-up resistor on TMS which will keep the QSpan II's JTAG controller in a reset state without requiring TRST# to be low.

15.3 Decoupling Capacitors

When routing the power (V_{DD}) and ground (V_{SS}) tracks to the QSpan II during board layout, care should be taken to ensure that the QSpan II is isolated from the power being supplied to other devices on the board by 0.1uF decoupling capacitors.

It is recommended every fourth V_{DD}/V_{SS} pair has a decoupling capacitor.

© 2019 Renesas Electronics Corporation

Chapter 16: Signals

This chapter describes the signals which are supported by the QSpan II. The following topics are discussed:

- “MC68360 Signals: QUICC” on page 161
- “MPC860 Signals: PowerQUICC” on page 165
- “M68040 Signals” on page 169
- “PCI Bus Signals” on page 172
- “Hot Swap Signals” on page 174
- “Miscellaneous Signals” on page 175
- “JTAG Signals” on page 176

16.1 Terminology

The following abbreviations are used in this chapter:

in	Defines a signal as a standard input-only signal.
out	Defines a signal as a standard output-only signal.
t/s	Defines a signal as a bidirectional, tristate input/output signal.
s/t/s	Defines a signal as a sustained tristate signal that is driven by one owner at a time.
o/d	Defines a signal as an open drain.

© 2019 Renesas Electronics Corporation

16.2 Overview

QSpan II's QBus Interface defines a number of signals that can be mapped to MC68360 (QUICC), MPC860 (PowerQUICC), or M68040 buses (see the following table).

Table 50: QBus Signal Names Compared to Motorola Signals

QBus Interface	MC68360	MPC860	M68040
BB_/BGACK_	BGACK_	BB_	BB_
BERR_/TEA_	BERR_	TEA_	TEA_
BURST_/TIP_	N/A	BURST_	TIP_
DACK_/SDACK_	DACK_	SDACK_	N/A
DSACK1_/TA_	DSACK1_	TA_	TA_
SIZ[1:0]	SIZ[1:0]	TSIZ[0:1]	SIZ[1:0]
TC[3:0]	FC[3:0]	AT[0:3]	TT[1:0] TM[2:0][a]
HALT_/TRETRY_	HALT_	TRETRY_	N/A

a. TC[3:0] can be connected to four out of the five TT[1:0] and TM[2:0] M68040 signals. The unused TC pins, if any, must be connected to pull-up resistors (see Appendix C: "Typical Applications" on page 359).

MPC860 signals do not necessarily operate in the same manner as MC68360 signals of the same name.

© 2019 Renesas Electronics Corporation

16.3 MC68360 Signals: QUICC

A[31:0]	Tristate bidirectional
Address Bus: address for the current bus cycle. It is driven by the QSpan II when it is the QBus master and input when QBus slave. It is qualified at the start of a transaction by AS_. As a slave, the QSpan II samples A[31:0] on the same falling edge of the QCLK as AS_. Both A[31:0] and AS_ must meet the synchronous set-up and hold time parameters about the falling edge of the QCLK to ensure correct operation. As a master, the QSpan II maintains the correct asynchronous timing relationships between A[31:0] and AS_. The address bus is driven valid after the rising edge of the QCLK, while the AS_ is driven only after the subsequent falling edge of the same clock period, ensuring the correct address before AS_ timing. When accesses are made to QSpan II registers from the QBus, only the lower 12 bits of the address bus are used to determine the offset.	
AS_	**Rescinding Tristate bidirectional**
Address Strobe: indicates the beginning (and duration) of a transaction on the QBus. As an output AS_ is driven by the QSpan II when the QSpan II is the QBus master, and is tristated at all other times. The Address Strobe is driven low after a falling edge of the QCLK. The Address Strobe qualifies the following signals as valid when it is asserted: A[31:0], TC[3:0], SIZ[1:0], and R/W_. QSpan II guarantees a minimum set-up time for the qualified signals before AS_ is asserted (all qualified signals are driven from the rising edge of QCLK preceding the assertion of AS_). QSpan II rescinds AS_ prior to tristate. As an input, AS_ is sampled on the falling edge of the QCLK. AS_ must meet a minimum set-up and hold time around the falling edge of the clock for correct operation. QSpan II recognizes a transaction as intended for it, and acknowledges it accordingly, only if one of CSREG_ or CSPCI_ is sampled low in conjunction with AS_. QSpan II does not require that the input signals qualified by the AS_ be valid when it is asserted.	
BB_/BGACK_	**Rescinding Tristate bidirectional**
Bus Busy: indicates ownership of the QBus. It, along with BR_ and BG_, provides the three-wire handshake for QBus arbitration. BB_/BGACK_ is intended to connect to the BGACK_ bus. As an output the QSpan II asserts BB_/BGACK_ from the falling edge of QCLK (while master). QSpan II rescinds BB_/BGACK_ prior to tristate. As an input, the QSpan II double-samples BB_/BGACK_ on the falling edge of QCLK: when it is master. QSpan II can also be programmed to use a synchronous mode for QBus arbitration.	
BGACK_	**Rescinding Tristate bidirectional**
See BB_/BGACK_	
BDIP_	**Input (MC68360 mode) / Bidirectional (MPC860)**
Burst Data In Progress: On the MC68360 interface, this pin is used only to determine the QBus master mode of the QSpan II. This is determined at reset by sensing the level of this pin. If BDIP_ is sampled as low (at power-up or reset) the QBus master module will operate as an MC68360 master. If the BDIP_ signal is sampled as high — at power-up or reset — the QSpan II will operate as an MPC860 master (see Table 48 on page 156).	

© 2019 Renesas Electronics Corporation

16.3 MC68360 Signals: QUICC *(Continued)*

BERR_/TEA_	Rescinding tristate birectional pin
Bus Error: used to indicate a bus error that occurs during a transaction. It can be used in conjunction with HALT_/TRETRY_ to indicate a busy-retry to the bus master. As an MC68360 master, the QSpan II samples BERR_/TEA_ on the falling edge of QCLK during cycles in which it is a QBus master. As an MC68360 slave, BERR_/TEA_ is driven by the QSpan II from the falling edge of QCLK. QSpan II negates BERR_/TEA_ prior to tristate.	
BG_	**Input**
Bus Grant: indicates that the QSpan II may become the next QBus master. BG_, along with BR_ and BB_/BGACK_, provide the three-wire handshake for QBus arbitration. BG_ is doubled-sampled on the falling edge of QCLK. QSpan II can be programmed to use a synchronous mode for QBus arbitration.	
BM_EN/ FIFO_RDY_	**Bidirectional**
Bus Master Enable/FIFO Ready: If this input is asserted — set as 1 — during a PCI Reset, the Bus Master Enable bit in the PCI_CS register will be set.	
BR_	**Output**
Bus Request: used by the QSpan II to request ownership of the QBus. BR_, along with BG_ and BB_/BGACK_, provide the three-wire handshake for QBus arbitration. BR_ is asserted and negated from the falling edge of QCLK in MC68360 mode.	
CSPCI_	**Input**
PCI Chip Select: indicates that the current transaction on the QBus is an access to the PCI Bus. During IDMA cycles, if this is sampled high, a single address transfer is indicated; if sampled low, a dual address transfer is indicated. It is sampled on the falling edge of clock.	
CSREG_	**Input**
Register Chip Select: indicates that the current transaction on the QBus is an access to the QSpan II's registers.It is sampled on the falling edge of clock.	
D[31:0]	**Tristate bidirectional**
Data Bus: provides the data information for the QSpan II's inputs and outputs on the QBus. As an MC68360 slave the QSpan II does not use DS_ to qualify data on writes. It also provides data on reads without decoding DS_, since DS is output only. As an MC68360 master, the QSpan II does use DS to qualify data on writes and to request data on reads.	
DACK_/SDACK_	**Input**
IDMA Acknowledge: indicates to the QSpan II that the current transaction is an IDMA transaction. The timing of DACK_ should be the same as for AS_. Using the IDMA handshakes, the QSpan II is capable of supporting MC68360 fast termination cycles.	

© 2019 Renesas Electronics Corporation

16.3 MC68360 Signals: QUICC *(Continued)*

DONE_	Input
IDMA Done: indicates that the IDMA controller has completed the current sequence of IDMA operations, and that the QSpan II should no longer use DREQ_ to request transactions. Setup for DONE is to falling edge of QCLK.	
DREQ_	**Output**
IDMA Request: request to the MC68360 IDMA to either transfer data to QSpan II IFIFO (PCI Write) or remove data from I-FIFO (PCI Read). It is asserted from the falling edge of QCLK in MC68360 mode.	
DSACK0_	**Rescinding tristate bidirectional**
Data and Size Acknowledge 0: in conjunction with DSACK1_/TA_, is driven by the addressed slave to acknowledge the completion of a data transfer on the QBus DSACK0_ has the same timing and characteristics as DSACK1_/TA_ (see the following description).	
DSACK1_/TA_	**Rescinding tristate bidirectional**
Data and Size Acknowledge 1: Used in conjunction with DSACK0_. This signal is driven by the addressed slave to acknowledge the completion of a data transfer on the QBus. QSpan II terminates all normal bus cycles by asserting both DSACK1_/TA_ and DSACK0_ (indicating a 32-bit port width at all times). The DSACK1_/TA_ output is driven high (inactive) after the release of AS_ until the next falling edge of the clock, at which point it is tristated.	
DS_	**Rescinding tristate output**
Data Strobe: used to indicate valid data on the data bus during write transactions, and to request data during read transactions. DS_ is driven by the QSpan II when it is a QBus master, and is tristated otherwise. As a slave the QSpan II assumes write data is valid on the rising edge of QCLK following the clock edge where AS_ is sampled asserted. For read transactions, the QSpan II provide information independent of DS_. DS_ is output only. As a master on the QBus, the QSpan II asserts DS_ to qualify data during reads and writes. For write transactions, the DS_ is driven from the falling edge of QCLK one half a clock period after the data is driven onto the Data bus. For read transactions, DS is driven at the same time as AS_. QSpan II negates DS_ prior to tristate.	
HALT_/TRETRY_	**Rescinding tristate bidirectional**
Halt: Suspends external bus activity. It is used for generating retries. As an MC68360 slave QSpan II uses HALT_/TRETRY_ as stated in Table 11 on page 52. As an MC68360 master QSpan II uses HALT_/TRETRY_ as stated in Table 27 on page 79.	
IMSEL	**Input**
Image Select: selects which QBus Slave Image to use when CSPCI_ is asserted. The timing requirements for IMSEL are the same as those of the address bus when the QSpan II is a QBus slave.	
QCLK	**Input**
QBus Clock: All devices intended to interface with QBus side of the QSpan II must be synchronized to this clock. The QCLK can operate up to 33 MHz (with an MC68360 bus). During IDMA fast termination cycles the maximum MC68360 QCLK frequency is 30 MHz.	

© 2019 Renesas Electronics Corporation

16.3 MC68360 Signals: QUICC *(Continued)*

QINT_	Open drain bidirectional
QBus Interrupt: as an output, this open drain signal is asserted by the QSpan II when an interrupt event occurs,. As an input, this signal can be mapped to the PCI INT# output.	
RESETI_	**Input**
QBus Reset Input: resets the QSpan II from the QBus side of the QSpan II. RESETI_ does not reset PCI configuration and status registers.	
RESETO_	**Open drain output**
QBus Reset Output: asserted whenever the QSpan II's PCI RST# input is asserted, or the internal software reset bit is set.	
R/W_	**Tristate bidirectional**
Read Write: indicates the direction of the data transfer on the Data bus. High indicates a read transaction; low indicates a write. It has the same timing as the Address bus. As a **master**, the QSpan II drives R/W_, and tristates it otherwise. As a slave, the R/W_ pin is an input.	
SIZ[1:0]	**Tristate bidirectional**
Size: indicates the number of bytes to be transferred during a bus cycle. The value of the Size bits, along with the lower two address bits and the port width, define the byte lanes that are active. Table 51 on page 169 shows the encoding for the Size bits.	
TC[3:0]	**Tristate bidirectional**
Transaction Code: provides additional information about a bus cycle when the QSpan II is a QBus master. Driven by the QSpan II when it is a QBus master, and tristated otherwise. As a slave, the QSpan II samples TC[3:0] on the first falling edge of the QCLK after AS_ is asserted. TC[3:0] can optionally be used with DACK_/SDACK_ to decode an IDMA operation. For use in IDMA transfers, TC[3:0] should be set to all ones. The timing for the TC[3:0] outputs is the same as the timing for the address bus when the QSpan II is a QBus master. The values output on the TC[3:0] bus during a transaction in which the QSpan II is the bus master is determined by the value programmed in the Transaction Code field of the corresponding QSpan II PCI target image. TC[3:0] is intended to connect to the MC68360's FC[3:0], but may be used for other special decoding purposes.	

© 2019 Renesas Electronics Corporation

16.4 MPC860 Signals: PowerQUICC

A[31:0]	Tristate bidirectional
Address bus: address for the current bus cycle. It is driven by the QSpan II when it is the QBus master and input as slave. It is qualified at the start of a transaction by TS_. As a slave, the QSpan II samples A[31:0] on the rising edge of QCLK, and is qualified by Transaction Start (TS_) on the same rising clock edge. As a master, the address is driven out following a rising edge of the QCLK. When accesses are made to QSpan II registers from the QBus, only the lower 12 bits of the address bus are used to determine the register offset.	
AT[0:3]	**Tristate bidirectional**
See TC[3:0]	
BB_/BGACK_	**Rescinding tristate bidirectional**
Bus Busy: indicates ownership of the QBus. BB_ is asserted low by a master to show that it owns the bus. BB_, along with BR_ and BG_, provides the three-wire handshake for QBus arbitration. As an output the QSpan II asserts BB_/BGACK_ from the rising edge of QCLK (while master). QSpan II drives BB_/BGACK_ to the prior to tristate. Note in the MPC860 mode, the QSpan II asserts BB_ one clock after receiving BG_: in compliance with the MPC860 arbiter. As an input, the QSpan II samples BB_/BGACK_ on the rising edge of QCLK. QSpan II can also be programmed to use a asynchronous mode for QBus arbitration.	
BDIP_	**Bidirectional**
Burst Data In Progress: As MPC860 master, the QSpan II uses BDIP_ in burst writes to indicate the second last data beat of a transaction. This allows the QSpan II to perform burst writes of two, three, or four beats. QSpan II does not use BDIP_ in the same manner for burst reads. Burst reads are always cacheline aligned and four beats in length. As MPC860 slave, the QSpan II monitors BDIP_ as a signal indicating the second last data beat in the burst. This allows the QSpan II to support bursts of two, three, or four data beats. The QBus master mode of the QSpan II is determined at power-up and reset by sensing the level of this pin. If BDIP_ is sampled as low (at reset) the QBus master module will operate as a MC68360 master. At reset, if the BDIP_ signal is sampled as high the QSpan II will operate as an MPC860 or M68040 master (see Table 48 on page 156).	
BERR_/TEA_	**Rescinding tristate bidirectional**
Transfer Error Acknowledge: indicates that a bus error occurred in the current transaction. Driven by the QSpan II when it is a QBus slave, and tristated otherwise. As an output BERR_/TEA_ is driven by the QSpan II from the rising edge of QCLK. QSpan II negates BERR_/TEA_ prior to tristate. As an input, the QSpan II samples BERR_/TEA_ on the rising edge of QCLK during cycles in which it is a QBus master.	
BG_	**Input**
Bus Grant: indicates that the QSpan II may become the next QBus master. BG_, along with BR_ and BB_/BGACK_, provide the three-wire handshake for QBus arbitration. BG_ is sampled on the rising edge of QCLK. QSpan II can be programmed to use a asynchronous mode for QBus arbitration.	

© 2019 Renesas Electronics Corporation

16.4 MPC860 Signals: PowerQUICC *(Continued)*

BR_	Output
Bus Request: used by the QSpan II to request ownership of the QBus. BR_, along with BG_ and BB_/BGACK_, provide the three-wire handshake for QBus arbitration. BR_ is asserted and released from the rising edge of QCLK.	
BM_EN/ FIFO_RDY_	**Bidirectional**
Bus Master Enable: If this input is asserted — set as 1 — during a PCI Reset, the Bus Master Enable bit in the PCI_CS register will be set. (FIFO_RDY) FIFO Ready functionality is not relevant to MPC860 applications.	
BURST_/TIP	**Tristate bidirectional**
Burst: indicates that the current initiated transfer is a burst cycle. This signal matches the MPC860 signal of the same name.	
CSPCI_	**Input**
PCI Chip Select: indicates that the current transaction on the QBus is an access to the PCI Bus. CSPCI_ can be sampled on the same clock as TS or up to three clocks following TS_ assertion. During IDMA cycles, if this is sampled high, a single address transfer is indicated; otherwise, a dual address transfer is indicated.	
CSREG_	**Input**
Register Chip Select: indicates that the current transaction on the QBus is an access to the QSpan II's registers. CSREG_ can be sampled on the same clock as TS_ or up to three clocks following TS_ assertion. This signal is sampled synchronously on the rising edge of clock after TS_.	
DP[3:0]	**Bidirectional**
Data Parity: provides the parity information for the data on D[31:0]. It is valid on the same clock as the data.	
D[31:0]	**Tristate bidirectional**
Data Bus: provides the general-purpose data path between the QSpan II, the MPC860, and other devices.	
DACK_/SDACK_	**Input**
IDMA Acknowledge: indicates to the QSpan II that the current transaction is an IDMA transaction.	
DONE_	**Input**
IDMA Done: This signal is not used with MPC860 transfers.	
DREQ_	**Output**
IDMA Request: request to the MPC860 IDMA to either transfer data to QSpan II IFIFO (PCI Write) or remove data from I-FIFO (PCI Read). It is asserted from the rising edge of QCLK in MPC860 mode.	

© 2019 Renesas Electronics Corporation

16.4 MPC860 Signals: PowerQUICC *(Continued)*

DSACK1_/TA_	Rescinding tristate bidirectional
Transaction Acknowledge: driven by the addressed slave to acknowledge the completion of a data transfer on the QBus. As a slave the QSpan II terminates all normal bus cycles by asserting TA_. QSpan II negates DSACK1_/TA_ prior to tristate.	
HALT_/TRETRY_	**Rescinding tristate bidirectional**
Transfer Retry: used for generating retries. As a MPC860 slave, QSpan II uses HALT_/TRETRY_ as stated in Table 12 on page 52. As a MPC860 master, QSpan II uses HALT_/TRETRY_ as stated in Table 28 on page 79.As a slave, HALT_/TRETRY_ has the same timing as DSACK1_/TA_. QSpan II negates HALT_/TRETRY_ prior to tristate.	
IMSEL	**Input**
Image Select: selects which QBus Slave Image to use when CSPCI_ is asserted. The timing requirements for IMSEL are the same as those of the address bus when the QSpan II is a QBus slave.	
QCLK	**Input**
QBus Clock: All devices intended to interface with QBus side of the QSpan II must be synchronized to this clock. The maximum QCLK frequency with a MPC860 is 50 MHz.	
QINT_	**Open drain bidirectional**
QBus Interrupt: as an output, this open drain signal is asserted by the QSpan II when an interrupt event occurs,. As an input, this signal can be mapped to the PCI INT# output.	
RESETI_	**Input**
QBus Reset Input: resets the QSpan II from the QBus side of the QSpan II. Note that RESETI_ does not reset PCI configuration and status registers.	
RESETO_	**Open drain output**
QBus Reset Output: asserted whenever the QSpan II's PCI RST# input is asserted, or the internal software reset bit is set.	
R/W_	**Tristate bidirectional**
Read Write: indicates the direction of the data transfer on the Data bus. High indicates a read transaction; low indicates a write. It has the same timing as the Address bus. As an active master, the QSpan II drives R/W_, and tristates it otherwise. As an addressed slave, the R/W_ pin is an input.	
SIZ[1:0]	**Tristate bidirectional**
Size: indicates the number of bytes to be transferred during a bus cycle. The value of the Size bits, along with the lower two address bits and the port width, define the byte lanes that are active. Table 51 on page 169 shows the encoding for the Size bits. SIZ[1:0] is intended to connect to MPC860 TSIZ[0:1].	

© 2019 Renesas Electronics Corporation

16.4 MPC860 Signals: PowerQUICC *(Continued)*

TA_	Rescinding tristate bidirectional
See DSACK1_/TA_	
TC[3:0]	**Tristate bidirectional**
Transaction Code Bus: provides additional information about a bus cycle when the QSpan II is a QBus master. Driven by the QSpan II when it is a QBus master, and tristated otherwise. As a slave, the QSpan II samples TC[3:0] on the first rising edge of the QCLK after TS_ is asserted. TC[3:0] can optionally be used with DACK_/SDACK_ to decode an IDMA operation. For use in IDMA transfers, TC[3:0] should be set to all ones. The timing for the TC[3:0] outputs is the same as the timing for the address bus when the QSpan II is a QBus master. The values output on the TC[3:0] bus during a transaction in which the QSpan II is the bus master is determined by the value programmed in the Transaction Code field of the corresponding QSpan II PCI target image. TC[3:0] is intended to connect to the MPC860's AT[0:3], but can be used for other special decoding purposes.	
TEA_	**Rescinding tristate bidirectional**
See BERR_/TEA_	
TRETRY_	**Rescinding tristate bidirectional**
See HALT_/TRETRY_	
TS_	**Rescinding Tristate bidirectional**
Transfer Start: TS_ is a three state bi-directional signal used to indicate the beginning of an MPC860 bus transaction on the QBus. The TS_ output is driven by the QSpan II when the QSpan II is the QBus master, and is tri-stated at all other times. As an output, TS_ is driven low after a rising edge of the QCLK. Transfer Start indicates the following signals will be valid on the next rising edge of the QCLK: A[31:0], TC[3:0], SIZ[1:0], and R/W_. QSpan II rescinds TS_ prior to tri-state. As an input, TS_ is sampled on the rising edge of the QCLK. QSpan II samples the address bus and other TS_ qualified signals on the same rising edge of QCLK in which it samples TS_ asserted. CSPCI_ and CSREG_ may have up to three wait states after TS_ is sampled.	

The following table applies to MC68360 and MPC860 SIZ[1:0] signals.

Table 51: MC68360/MPC860 Encoding for the SIZ[1:0] Signal

SIZ[1]	SIZ[0]	QSpan II Master	QSpan II MC68360 slave	QSpan II MPC860 slave
0	0	4 bytes	4 bytes	4 bytes
0	1	1 byte	1 byte	1 byte
1	0	2 bytes	2 bytes	2 bytes
1	1	Reserved	3 bytes	3 bytes

© 2019 Renesas Electronics Corporation

16.5 M68040 Signals

A[31:0]	Tristate bidirectional
Address bus: Address for the current bus cycle. It is driven by the QSpan II when the QSpan II is the M68040 master and input when the QSpan II is the slave. It is qualified at the start of a transaction by TS_. As a slave, the QSpan II samples A[31:0] on the rising edge of QCLK, and is qualified by Transaction Start (TS_). As a master, the address is driven out following a rising edge of the QCLK. When accesses are made to QSpan II registers from the QBus, only the lower 12 bits of the address bus are used to determine the register offset.	
BB_/BGACK_	**Rescinding tristate bidirectional**
Bus Busy: This signal is asserted by the current bus master to indicate ownership of the M68040 bus. BB_, along with BR_ and BG_, provide the three-wire handshake for M68040 bus arbitration. As a**n** output the QSpan II asserts BB_/BGACK_ from the rising edge of QCLK (while master). QSpan II negates BB_/BGACK_ prior to tristate. As an input, the QSpan II samples BB_/BGACK_ on the rising edge of QCLK (while master). QSpan II can also be programmed to use an asynchronous mode for M68040 bus arbitration.	
BDIP_	**Bidirectional**
Burst Data In Progress: This signal is only used in the 68040 mode at reset. QSpan II Master/Slave mode is determined at reset by sensing the level of this pin in conjunction with SIZ[1]. See Table 48 on page 156.	
BERR_/TEA_	**Rescinding tristate bidirectional**
Transfer Error Acknowledge: indicates an error condition exists for a bus transfer. Driven by the QSpan II when it is a M68040 bus slave to signal an errored transaction. As an input, the QSpan II samples BERR_/TEA_ during M68040-style cycles in which it is a M68040 bus master on the rising edge of QCLK. Target retries are indicated by the simultaneous assertion of DSACK1_/TA_ and BERR_/TEA_.	
BG_	**Input**
Bus Grant: indicates that the QSpan II may become the next M68040 bus master. BG_, along with BR_ and BB_/BGACK_, provide the three-wire handshake for M68040 bus arbitration. BG_ is sampled on the rising edge of QCLK. QSpan II can be programmed to use an asynchronous mode for M68040 bus arbitration.	
BM_EN/ FIFO_RDY_	**Bidirectional**
Bus Master Enable: If this input is asserted (set as 1) during a PCI Reset, the Bus Master Enable bit in the PCI_CS register will be set.	
BR_	**Output**
Bus Request: asserted by the QSpan II to request ownership of the M68040 bus. BR_, along with BG_ and BB_/BGACK_, provide the three-wire handshake for M68040 bus arbitration. BR_ is asserted and released from the rising edge of QCLK.	

© 2019 Renesas Electronics Corporation

16.5 M68040 Signals *(Continued)*

BURST_/TIP_	Tristate bidirectional
Transaction In Progress: asserted for the length of an M68040 transfer. This signal uses the same pin as the MPC860 BURST_ signal.	
CSPCI_	**Input**
PCI Chip Select: indicates that the current transaction on the QBus is an access to the PCI Bus.	
CSREG_	**Input**
Register Chip Select: indicates that the current transaction on the QBus is an access to the QSpan II's registers.	
D[31:0]	**Tristate bidirectional**
Data Bus: provides the data information for the QSpan II's inputs and outputs on the M68040 bus.	
DSACK1_/TA_	**Rescinding tristate bidirectional**
Transaction Acknowledge: asserted by the addressed slave to acknowledge a bus transfer. As a slave the QSpan II terminates all normal bus cycles by asserting DSACK1_/TA_. QSpan II negates DSACK1_/TA_ prior to tristate. Target retries are indicated by the simultaneous assertion of DSACK1_/TA_ and BERR_/TEA_.	
IMSEL	**Input**
Image Select: selects which QBus Slave Image to use when CSPCI_ is asserted. The timing requirements for IMSEL are the same as those of the address bus when the QSpan II is a M68040 bus slave.	
QCLK	**Input**
QBus Clock: All devices intended to interface with QBus side of the QSpan II must be synchronized to this clock. QCLK can operate up to 40MHz.	
QINT_	**Open drain bidirectional**
QBus Interrupt: as an output, this open drain signal is asserted by the QSpan II when an interrupt event occurs. As an input, this signal can be mapped to the PCI INT# output.	
RESETI_	**Input**
QBus Reset Input: resets the QSpan II from the QBus side of the QSpan II. RESETI_ does not reset PCI configuration and status registers.	
RESETO_	**Open drain output**
QBus Reset Output: asserted whenever the QSpan II's PCI RST# input is asserted, or the internal software reset bit is set.	

© 2019 Renesas Electronics Corporation

16.5 M68040 Signals *(Continued)*

R/W_	Tristate bidirectional
Read Write: indicates the direction of the data transfer on the Data bus. High indicates a read transaction; a low indicates a write. It has the same timing as the Address bus. As a master, the QSpan II drives R/W_, and tristates it otherwise. As a slave, the R/W_ pin is an input.	
SIZ[1:0]	**Tristate bidirectional**
Size: indicates the number of bytes to be transferred during a bus cycle. The value of the Size bits, along with the lower two address bits and the port width, define the byte lanes that are active. Table 52 on page 172 shows the encoding for the Size bits. SIZ[1:1] indicates a M68040 burst cycle.	
TA_	**Rescinding tristate bidirectional**
See DSACK1_/TA_	
TC[3:0]	**Tristate bidirectional**
Transaction Code Bus: provides additional information about a bus cycle when the QSpan II is a M68040 bus master. Driven by the QSpan II when it is a M68040 bus master. As a slave, the QSpan II samples TC[3:0] on the rising edge of QCLK, and is qualified by Transfer Start (TS_). The timing for the TC[3:0] outputs is the same as the timing for the address bus when the QSpan II is a M68040 bus master. The values output on the TC[3:0] bus during a transaction in which the QSpan II is the bus master is determined by the value programmed in the Transaction Code field of the corresponding PCI target image. TC[3:0] may be connected to a subset of the TT[1:0] and TM[2:0] M68040 pins. Unused TC[3:0] pins, if any, should be connected to pull-up resistors.	
TEA_	**Rescinding tristate bidirectional**
See BERR_/TEA_	
TIP_	**Tristate bidirectional**
See BURST_/TIP_	
TS_	**Tristate bidirectional**
Transfer Start: asserted for one clock period to indicate the start of a transfer.	

© 2019 Renesas Electronics Corporation

The following table describes the signal encoding for M68040 SIZ[1:0] signals. Byte lane enabling is combined with A[1:0] as described in the *Motorola M68040 User's Manual*.

Table 52: M68040 Encoding for the SIZ[1:0] Signal

SIZ[1]	SIZ[0]	QSpan II as M68040 Master	QSpan II as M68040 Slave
0	0	4 bytes	4 bytes
0	1	1 byte	1 byte
1	0	2 bytes	2 bytes
1	1	Reserved	Line (burst)

16.6 PCI Bus Signals

AD [31:0]	Bidirectional (t/s)
PCI Address/Data Bus: address and data are multiplexed over these pins providing a 32-bit address/data bus. A bus transaction consists of an address phases followed by one or more data phases.	
C/BE# [3:0]	**Bidirectional (t/s)**
PCI Bus Command and Byte Enable Lines: command information during address phase and byte line enables during data phase.	
DEVSEL#	**Bidirectional (s/t/s)**
PCI Device Select: driven by the QSpan II when it is accessed as PCI slave. Sampled by the QSpan II when it is PCI master.	
EXT_GNT#[6:1]	**Output**
External Grant: used by the QSpan II to indicate to an external device that it has been granted access to the PCI bus (this is an output).	
EXT_REQ#[6:1]	**Bidirectional**
External Request: used by an external device to indicate to the QSpan II PCI bus arbiter that it wants ownership of the PCI bus. The QSpan II drives the unused EXT_REQ#[6:1] pins high when an external arbiter is used.	
FRAME#	**Bidirectional (s/t/s)**
Cycle Frame for PCI Bus: driven by the QSpan II when it is PCI master, and is monitored by the QSpan II when it is PCI target. This signal indicates the beginning and duration of an access.	

© 2019 Renesas Electronics Corporation

16.6 PCI Bus Signals *(Continued)*

GNT#	Bidirectional
PCI Grant: As an input, when the QSpan II uses an external arbiter, it indicates to the QSpan II that it has been granted ownership of the PCI bus. GNT# can be parked at QSpan II to improve its PCI master performance. As an output, when the QSpan II is the PCI bus arbiter, it indicates to an external device that it has been granted access to the PCI bus.	
IDSEL	**Input (in)**
PCI Initialization Device Select: used as a chip select during configuration read and write transactions	
INT#	**Bidirectional (o/d)**
PCI Interrupt: As an output, it indicates that the QSpan II is generating an internal interrupt. As an input, this signal will cause QINT# to be asserted on the QBus bus (if enabled).The signal can be used as an input for an application where the MPC860 is the system host.	
IRDY#	**Bidirectional (s/t/s)**
Initiator Ready: used by the QSpan II to indicate that it is ready to complete the current data phase of the transaction. As PCI target, the QSpan II monitors this signal during reads to determine when the PCI master is ready to accept data.	
PAR	**Bidirectional (t/s)**
Parity: parity is even across AD [31:0] and C/BE# [3:0] (the number of 1s summed across these lines and PAR equal an even number).	
PCLK	**Input (in)**
PCI Clock input for PCI interface used to generate fixed timing parameters. PCLK can operate up to 33MHz.	
PERR#	**Bidirectional (s/t/s)**
Parity Error: reports parity errors during all PCI transactions except a special cycle. QSpan II asserts PERR# within two clocks of receiving a parity error on incoming data, and holds PERR# for at least one clock for each errored data phase.	
REQ#	**Bidirectional (t/s)**
Bus Request: used by the QSpan II to indicate that it requires the use of the PCI bus; this is an output when the QSpan II uses an external arbiter. REQ# is also used by an external device to indicate to the QSpan II PCI bus arbiter that this device wants use of the PCI bus; this signal is an input when the QSpan II PCI bus arbiter is used.	
RST#	**Input**
PCI Reset: Asynchronous Reset that is used to bring PCI-specific registers, state machines, and signals to a consistent state.	
SERR#	**Bidirectional**
System Error: reports address parity errors during all transactions. QSpan II asserts SERR# within two clocks of receiving a parity error on incoming address, and holds SERR# for at least one clock for each errored data phase.	

© 2019 Renesas Electronics Corporation

16.6 PCI Bus Signals *(Continued)*

STOP#	Bidirectional
Stop: used by the QSpan II as PCI target when it wishes to signal the PCI master to stop the current transaction. As PCI master, the QSpan II terminates the transaction if it receives STOP# from the PCI target.	
TRDY#	**Bidirectional (s/t/s)**
Target Ready: used by the QSpan II as PCI target to indicate that it is ready to complete the current data phase. During a read with QSpan II as PCI master, the target asserts TRDY# to indicate to the QSpan II that valid data is present on the data bus.	

16.7 Hot Swap Signals

ENUM#	Open Drain Output
Hot Swap Event Interrupt: notifies the PCI host that either a board has been inserted or is about to be extracted.	
HS_HEALTHY_	**Input**
Hot Swap Healthy: QSpan II internally OR's this input with PCI reset (RST#) to determine when back-end power is stable.	
HS_LED	**Output**
Hot Swap LED Control: This signal is driven by QSpan II to control the status of the LED. The signal is driven low to turn on the LED during the hardware and software connection stages. The signal is tri-stated during normal operation to turn off the LED.	
HS_SWITCH	**Input**
Hot Swap Switch: QSpan II uses this input to monitor the state of the Hot Swap board ejector latch. A low value on this signal indicates that the ejector latch is open.	

© 2019 Renesas Electronics Corporation

16.8 Miscellaneous Signals

ENID	Input
ENID: EEPROM Loading Reset Option. If ENID is sampled high after a PCI reset, then the QSpan II will download register information from the EEPROM.	
PCI_ARB_EN	**Input**
PCI Arbiter Enable: If PCI_ARB_EN is sampled high at the negation of Reset, the QSpan II's PCI bus arbiter is enabled and will function as the PCI bus arbiter.	
PCI_DIS	**Input**
PCI Configuration Disable: This is a power-up option which makes the QSpan II hold off on ENUM# assertion and retry PCI configuration cycles to allow the Host processor to perform local configuration. QSpan II accepts PCI configuration cycles after the PCI_DIS bit is cleared in the MISC_CTL2 register.	
PME#	**Open Drain Output**
Power Management Event Interrupt: This signal is asserted to request a change in its current power management state and/or to indicate that a power management event has occurred.	
SCL	**Output**
Serial Clock: EEPROM Serial clock. The frequency of the SCL is the PCLK frequency divided by 2^{10}.	
SDA	**Bidirectional**
Serial Data: EEPROM Serial data line. If SDA is sampled high after a PCI reset, then the QSpan II will download register information from the EEPROM.	
TEST1	**Input**
This is a manufacturing test input which should be left open. This pin has an internal pull-up resistor.	
TEST2	**Input**
This is a manufacturing test input which should be left open. This pin has an internal pull-down resistor.	
TEST3	**Input**
This is a manufacturing test input which should be left open. This pin has an internal pull-down resistor.	
TMODE[1:0]	**Input**
Test Mode: Selects the QSpan II test mode. These pins have internal pull-down resistors.	
VH	**Power**
Highest I/O Voltage: VH is a power pin which must be connected to the highest voltage level that the QSpan II I/Os will observe on either the QBus or the PCI bus.	

© 2019 Renesas Electronics Corporation

16.9 JTAG Signals

TMS	Input
Test Mode Select: Used to control the state of the Test Access Port controller	
TDI	**Input**
Test Input: Used (in conjunction with TCK) to shift data and instructions into the Test Access Port (TAP) in a serial bit stream.	
TDO	**Output**
Test Output: Used (in conjunction with TCK) to shift data and instructions into the Test Access Port (TAP) in a serial bit stream.	
TRST_	**Input**
Test Reset: Used to force the Test Access Port (TAP) into a initialized state.	
TCK	**Input**
Test Clock: Used to clock state information and data into and out of the device during boundary scan.	

© 2019 Renesas Electronics Corporation

Chapter 17: Signals and DC Characteristics

This chapter discusses QSpan II signals and DC characteristics. The following topics are explained:

- "Packaging and Voltage Level Support" on page 178
- "Signals and DC Characteristics" on page 178
- "Pinout" on page 190

17.1 Terminology

The following abbreviations are used in this chapter:

2S	Two-state output
3S	Tristate output
B	Bidirectional
I	Input
O	Output
OD	Open Drain
PD	Internal pull-down
PU	Internal pull-up
TTL	Input with TTL threshold
TTL PU	Input with TTL threshold (the pull-up resistor is internal)
TTL Sch.	TTL Schmitt trigger input

© 2019 Renesas Electronics Corporation

17.2 Packaging and Voltage Level Support

QSpan II is available in two packages:

- 17 mm x 17 mm, 1.0 mm ball pitch, 256 PBGA
- 27 mm x 27 mm, 1.27 mm ball pitch, 256 PBGA

Both packages require a 3.3V power supply and provide 3.3V or 5V I/O signaling characteristics on the PCI bus. Both devices are also 5V tolerant. For more information on QSpan II packaging, see Appendix F: “Mechanical Information” on page 399.

17.3 Signals and DC Characteristics

Table 53: Non-PCI DC Electrical Characteristics (V_{DD} ±5%)

Symbols[a]	Parameters	Test conditions	Min	Max
V_{IH}	Voltage Input high	TTL, TTL Sch	2.0V	-
V_{IH}	Voltage Input high	CMOS	0.7 V_{DD}	-
V_{IL}	Voltage Input low	TTL, TTL Sch	-	0.8V
V_{IL}	Voltage Input low	CMOS	-	0.3V_{DD}
V_{HY}	Hysteresis for Schmitt	TTL Sch	0.3V	-
V_{OL}	Voltage Output low	I_{OL} = 8.0 mA V_{DD} = 3.0 V	-	0.4V
V_{OH}	Voltage Output high	I_{OH} = -8.0 ma V_{DD} = 3.0 V	2.4V	-
I_{IL}	Input Leakage Current low	With no pull-up or pull-down resistance (V_{IN} = V_{SS} or V_{DD})	-10.0µA	10.0µA
I_{IL_PU}	Input Leakage Current Low with Pull-up	-	-100.0µA	-4µA
I_{IH_PD}	Input Leakage Current High with Pull-down	-	4µA	100µA
I_{OZ}	Tristate Output Leakage	V_{OUT} = V_{DD} or V_{SS}	-10.0µA	10.0µA
I_{DD}	Quiescent Supply Current	V_{IN} = V_{SS} or V_{DD}	-	80µA[b]
C_{IN}	Input Capacitance	-	-	10pF

a. For more information on PCI signal characteristics, see the *PCI Local Bus Specification (Revision 2.2).*

b. Depends on customer design.

© 2019 Renesas Electronics Corporation

Table 54: 3.3V PCI I/O Signaling AC/DC Characteristics (V_{DD} ±5%)

Symbols	Parameters	Test Conditions	Min	Max	Units
V_{IL}	Input low voltage	-	-0.5	$0.3*V_{DD}$	V
V_{IH}	Input high voltage	-	$0.5*V_{DD}$	$V_{DD}+0.5$	V
I_{IH}	Input high current	$0<V_{IN}<V_{DD}$	-10	+10	µA
I_{IL}	Input low current	$0<V_{IN}<V_{DD}$	-10	+10	µA
V_{OL}	Output low voltage	I_{OL}=1500 µA	-	$0.1*V_{DD}$	V
V_{OH}	Output high voltage	I_{OH}=-500 µA	$0.9*V_{DD}$	-	V
I_{OZ}	Output leakage current tristate condition	$V_{OH}=V_{SS}$ or V_{DD}	-10	10	µA
I_{OH} (AC)	Switching current high	$0<V_{OUT}\leq 0.3V_{DD}$	$-12*V_{DD}$	-	mA
		$0.3V_{DD}<V_{OUT}<0.9V_{DD}$	-17.1 (V_{DD}-V_{OUT})	-	mA
		$0.7V_{DD}<V_{OUT}<V_{DD}$	-	Eqn A[a]	mA
	(Test Point)	$V_{OUT}=0.7V_{DD}$	-	$-32V_{DD}$	mA
I_{OL} (AC)	Switching current low	$V_{DD}>V_{OUT}>0.6V_{DD}$	$16V_{DD}$	-	mA
		$0.6V_{DD}>V_{OUT}>0.1V_{DD}$	$26.7V_{OUT}$	-	mA
		$0.18V_{DD}>V_{OUT}>0$	-	Eqn B[b]	mA
	(Test Point)	$V_{OUT}=0.18V_{DD}$	-	$38V_{DD}$	mA
I_{CL}	Low clamp current	$-3<V_{IN}\leq -1$	$-25+(V_{IN}-V_{DD}-1)/0.015$	-	mA
I_{CH}	High clamp current	$V_{DD}+4>V_{IN}>V_{DD}+1$	25+(Vin-V_{DD} -1)/0.015	-	mA
slewr	Output rise slew rate	$0.2V_{DD}$-$0.6V_{DD}$ load	1	4	V/ns
slewf	Output fall slew rate	$0.6V_{DD}$-$0.2V_{DD}$ load	1	4	V/ns

a. Equation A: $I_{OH}=(98.0/V_{DD})*(V_{OUT}-V_{DD})*(V_{OUT}+0.4V_{DD})$ for $V_{DD} >V_{OUT}>0.7V_{DD}$

b. Equation B: $I_{OL}=(256/V_{DD}) * V_{OUT} * (V_{DD} -V_{OUT})$ for $0v < V_{OUT}<0.18V_{DD}$

© 2019 Renesas Electronics Corporation

Table 55: 5V PCI I/O Signaling AC/DC Electrical Characteristics

Symbols	Parameters	Test Conditions	Min	Max	Units
V_{IL}	Input low voltage	-	-0.5	0.8	V
V_{IH}	Input high voltage	-	2.0	5.3[a]	V
I_{IH}	Input high current	V_{IN}=2.7	-	+70	µA
I_{IL}	Input low current	V_{IN}=0.5	-	-70	µA
V_{OL}	Output low voltage	I_{OL}=3 mA, 6 mA	-	0.55	V
V_{OH}	Output high voltage	I_{OH}=-2 mA	2.4	-	V
I_{OZ}	Output leakage current tristate condition	V_{OH}=V_{SS} or V_{DD}	-70	70	µA
I_{OH} (AC)	Switching current high	$0<V_{OUT}\leq 1.4$	-44	-	mA
		$1.4<V_{OUT}<2.4$	-44 + (V_{OUT} -1.4)/0.024	-	mA
		$3.1<V_{OUT}<V_{DD}$	-	Eqn C[b]	mA
	(Test Point)	V_{OUT}=3.1	-	-142	mA
I_{OL} (AC)	Switching current low	$V_{OUT}\geq 2.2$	95	-	mA
		$2.2>V_{OUT}>0.55$	V_{OUT}/0.023	-	mA
		$0.71>V_{OUT}>0$	-	Eqn D[c]	mA
	(Test Point)	V_{OUT}=0.71	-	206	mA
I_{CL}	Low clamp current	$-5<V_{IN}\leq -1$	-25 + (V_{IN}+1)/0.015	-	mA
slewr	Output rise slew rate	0.4 to 2.4 load	1	5	V/ns
slewf	Output fall slew rate	2.4 to 0.4 load	1	5	V/ns

a. All signals are 5V tolerant.

b. Equation C: $I_{OH} = 11.9 * (V_{OUT} - 5.25) * (V_{OUT} + 2.45)$ for $V_{DD} > V_{OUT} > 3.1V$

c. Equation D: $I_{OL} = 78.5 * V_{OUT} * (4.4 - V_{OUT})$ for $0V < V_{OUT} < 0.71V$

© 2019 Renesas Electronics Corporation

Table 56: Pin List for QSpan II Signals

Pin Name	17 mm PBGA Ball #	27 mm PBGA Ball #	Type	Input Type	Output Type	Reset State	IOL (mA)	IOH (mA)	Interface	Signal Description
A[31:0]	See Table 58	See Table 58	B	TTL	3S	Hi-Z	8	-8	QBus	Address Lines
AD[31:0]	See Table 57	See Table 57	B	PCI	3S	Hi-Z	-	-	PCI	Address/data Lines
AS_	L16	N20	B	TTL Sch.	3S	Hi-Z	8	-8	QBus	Address Strobe
BB_/BGACK_	L2	R1	B	TTL Sch.	3S	Hi-Z	8	-8	QBus	Bus Busy/bus Grant Acknowledge
BDIP_	K14	M17	B	TTL	3S	Hi-Z	8	-8	QBus	Burst Data In Progress (And IDT QSpan II Master Mode)
BERR_/TEA_	L15	N19	B	TTL Sch.	3S	Hi-Z	8	-8	QBus	Bus Error/ Transfer Error Acknowledge
BG_	K16	M18	I	TTL	-	-	-	-	QBus	Bus Grant
BGACK_	See BB_/BGACK_									
BM_EN/ FIFO_RDY_	J14	M20	B	TTL (PD)	2S	Hi-Z	8	-8	QBus	Bus Master Enable
BR_	L1	R2	O	TTL	2S	Hi-Z	8	-8	QBus	Bus Request
BURST_/TIP_	L4	N3	B	TTL	3S	Hi-Z	8	-8	QBus	Burst/transaction In Progress
C/BE[0]	R11	W15	B	PCI	3S	Hi-Z	-	-	PCI	Command And Byte Enables
C/BE[1]	R9	W12								
C/BE[2]	N7	Y9								
C/BE[3]	T2	W4								
CSPCI_	P16	R20	I	TTL	-	-	-	-	QBus	PCI Chip Select
CSREG_	M13	T19	I	TTL	-	-	-	-	QBus	QSpan Register Chip Select
D[31:0]	See Table 59	See Table 59	B	TTL	3S	Hi-Z	8	-8	QBus	Data Lines
DP[0]	A5	C6	B	TTL	3S	Hi-Z	8	-8	QBus	Data Parity Line
DP[1]	C5	B5								
DP[2]	B5	A4								
DP[3]	D4	C5								
DACK_/ SDACK_	J13	K19	I	TTL Sch.	-	-	-	-	QBus	IDMA Acknowledge
DEVSEL#	R8	Y11	B	PCI	3S	Hi-Z	8	-8	PCI	Device Select

© 2019 Renesas Electronics Corporation

Table 56: Pin List for QSpan II Signals ***(Continued)***

Pin Name	17 mm PBGA Ball #	27 mm PBGA Ball #	Type	Input Type	Output Type	Reset State	IOL (mA)	IOH (mA)	Interface	Signal Description
DONE_	J15	K17	I	TTL	-	-	-	-	QBus	IDMA Done
DREQ_	G13	J17	O	TTL	3S	Hi-Z	8	-8	QBus	IDMA Request
DS_	C10	A13	O	TTL	3S	Hi-Z	8	-8	QBus	Data Strobe
DSACK0_	G3	J4	B	TTL Sch.	3S	Hi-Z	8	-8	QBus	Data And Size Acknowledge 0
DSACK1_/ TA_	F1	H1	B	TTL Sch.	3S	Hi-Z	8	-8	QBus	Data And Size Acknowledge 1/ Transfer Acknowledge
ENID	H15	J18	I	TTL PD	-	-	-	-	-	EEPROM Loading Reset Options
ENUM#	G4	K1	O	-	OD	Hi-Z	8	-8	-	CompactPCI Hot Swap event output
EXT_GNT# [6:1]	See Table 60	See Table 60	O	PCI	3S	Hi-Z	-	-	PCI	External Grant
EXT_REQ# [6:1]	See Table 60	See Table 60	B	PCI	3S	Hi-Z	-	-	PCI	External Request
FRAME#	P7	W10	B	PCI	3S	Hi-Z	-	-	PCI	Cycle Frame
GNT#	M3	U2	B	PCI	3S	Hi-Z	-	-	PCI	Grant (External Grant 7)
HALT_/ TRETRY_	M1	T1	B	TTL Sch.	3S	Hi-Z	8	-8	QBus	Halt/Transfer Retry
HS_ HEALTHY_	K4	N2	I	TTL (PD)	-	-	-	-	-	Hot Swap Healthy Signal
HS_LED	H2	L2	O	-	OD	Low	8	-8	-	LED control output for Hot Swap
HS_SWITCH	J2	L4	I	TTL (PD)	-	-	-	-	-	Switch input for Hot Swap
IDSEL	N12	Y16	I	PCI	-	-	-	-	PCI	Initialization Device Select
IMSEL	H4	L1	I	TTL	-	-	-	-	QBus	Slave Image Select
INT#	M14	T18	B	PCI	OD	Hi-Z	8	-8	PCI	Interrupt
IRDY#	R7	V10	B	PCI	3S	Hi-Z	-	-	PCI	Initiator Ready
PAR	N10	Y12	B	PCI	3S	Hi-Z	-	-	PCI	Parity

© 2019 Renesas Electronics Corporation

Table 56: Pin List for QSpan II Signals ***(Continued)***

Pin Name	17 mm PBGA Ball #	27 mm PBGA Ball #	Type	Input Type	Output Type	Reset State	IOL (mA)	IOH (mA)	Interface	Signal Description
PCI_ARB_EN	C4	B4	I	TTL (PD)	-	-	-	-	PCI	Power up option to enable PCI Bus Arbiter
PCI_DIS	K3	M4	I	TTL (PD)	-	-	-	-	PCI	Power up option to disable PCI config accesses to QSpan II
PCLK	P8	W11	I	PCI	-	-	-	-	PCI	PCI Clock
PERR#	N9	U11	B	PCI	3S	Hi-Z	-	-	PCI	Parity Error
PME#	J1	M2	O	-	OD	Hi-Z	8	-8	-	Power management event
QCLK	D8	A10	I	TTL	-	-	-	-	QBus	QBus clock
QINT_	H16	J19	B	TTL	OD	Hi-Z	8	-8	QBus	Interrupt
REQ#	M4	T3	B	PCI	3S	Hi-Z	-	-	PCI	Request (External Request 7)
RESETI_	J4	M3	I	TTL Sch.	-	-	-	-	QBus	Reset Input
RESETO_	K1	N1	O	TTL	OD	Hi-Z	8	-8	QBus	Reset Output
RETRY_	See HALT_/TRETRY_									
RST#	M2	P4	I	PCI	-	-	-	-	PCI	Reset
R/W_	D1	G3	B	TTL	3S	Hi-Z	8	-8	QBus	Read/Write
SCL	H3	K3	O	TTL	3S	Hi-Z	8	-8	EEPROM	Serial Clock
SDA	G1	J1	B	TTL	OD	Hi-Z	8	-8	EEPROM	Serial Data
SDACK_	See DSACK_/SDACK_									
SERR#	M15	U20	B	TTL	OD	Hi-Z	8	-8	PCI	System Error
SIZ[0]	G2	J2	B	TTL	3S	Hi-Z	8	-8	QBus	Size
SIZ[1]	F4	J3								
STOP#	T7	V11	B	PCI	3S	Hi-Z	-	-	PCI	Stop
TA_	See DSACK1_/TA_									
TC[0]	N16	P18	B	TTL	3S	Hi-Z	8	-8	QBus	Transaction Code
TC[1]	L14	P19								
TC[2]	M16	P20								
TC[3]	L13	N18								

© 2019 Renesas Electronics Corporation

Table 56: Pin List for QSpan II Signals ***(Continued)***

Pin Name	17 mm PBGA Ball #	27 mm PBGA Ball #	Type	Input Type	Output Type	Reset State	IOL (mA)	IOH (mA)	Interface	Signal Description
TCK	H13	J20	I	TTL	-	Hi-Z	-	-	JTAG	JTAG Test Clock Input
TDI	K15	L18	I	TTL (PU)	-	Hi-Z	-	-	JTAG	JTAG Test Data Input
TDO	K13	M19	O	TTL	3S	Hi-Z	8	-8	JTAG	JTAG Test Data Output
TEA_	See BERR_/TEA_									
TEST1	B12	B15	I	CMOS (PU)	-	-	-	-	-	Manufacturing Test Pin
TEST2	A14	D14	I	TTL (PD)	-	-	-	-	-	Manufacturing Test Pin
TEST3	C12	C15	I	TTL (PD)	-	-	-	-	-	Manufacturing Test Pin
TIP_	See BURST_/TIP_									
TMODE[0]	J3	M1	I	TTL (PD)	-	-	-	-	-	Test Mode Pins
TMODE[1]	H1	L3								
TMS	J16	K20	I	TTL (PU)	-	-	-	-	JTAG	JTAG Mode Select
TRDY#	N8	Y10	B	PCI	3S	Hi-Z	-	-	PCI	Target Ready
TRST_	H14	K18	I	TTL (PU)	-	-	-	-	JTAG	JTAG Test Reset
TS_	K2	P2	B	TTL Sch.	3S	Hi-Z	8	-8	QBus	Transfer Start

© 2019 Renesas Electronics Corporation

Table 57: PCI Bus Address/Data Pins

Signal	17 mm PBGA	27 mm PBGA		Signal	17 mm PBGA	27 mm PBGA
AD0	N15	V20		AD16	P6	W9
AD1	N14	U18		AD17	T6	U9
AD2	T16	W20		AD18	T5	Y8
AD3	P15	V19		AD19	R6	W8
AD4	T14	Y20		AD20	N6	V8
AD5	T13	V18		AD21	P5	Y7
AD6	P14	W18		AD22	N5	V7
AD7	P12	U14		AD23	T1	U5
AD8	T10	V14		AD24	R2	W3
AD9	P11	Y15		AD25	R3	Y2
AD10	N11	W14		AD26	P3	Y1
AD11	P10	Y14		AD27	N3	W2
AD12	R10	V13		AD28	N4	W1
AD13	T9	W13		AD29	P2	U3
AD14	T8	Y13		AD30	P1	V2
AD15	P9	V12		AD31	N2	T4

© 2019 Renesas Electronics Corporation

Table 58: QBus Address Pins

Signal	17 mm PBGA	27 mm PBGA		Signal	17 mm PBGA	27 mm PBGA
A0	G14	G20		A16	A9	D10
A1	G16	G19		A17	D7	A9
A2	G15	F20		A18	B8	C9
A3	F14	F19		A19	C7	D9
A4	F16	E20		A20	A8	B8
A5	E16	G17		A21	A7	C8
A6	C13	C17		A22	B7	A7
A7	B16	B17		A23	D6	B7
A8	C14	A18		A24	C6	A6
A9	A15	B16		A25	A6	C7
A10	D12	C16		A26	C1	E3
A11	C11	C14		A27	E3	E1
A12	D11	B14		A28	E4	F2
A13	A13	A14		A29	E1	G2
A14	A12	C13		A30	F3	H3
A15	B11	B13		A31	F2	H2

© 2019 Renesas Electronics Corporation

Table 59: QBus Data Pins

Signal	17 mm PBGA	27 mm PBGA		Signal	17 mm PBGA	27 mm PBGA
D0	F15	F18		D16	C9	C11
D1	E15	E19		D17	A10	A11
D2	E14	E18		D18	B9	B10
D3	D16	E17		D19	C8	C10
D4	D15	C20		D20	B6	B6
D5	F13	D18		D21	D5	D7
D6	E13	B20		D22	A4	A3
D7	D14	B19		D23	A3	C4
D8	C16	C18		D24	B4	D5
D9	C15	A20		D25	A2	B3
D10	B14	B18		D26	B3	A2
D11	B15	A19		D27	C3	C2
D12	D10	D12		D28	B1	B1
D13	A11	C12		D29	D3	D3
D14	D9	B12		D30	D2	C1
D15	B10	B11		D31	C2	E4

Table 60: External Request and Grant Pins

Signal	17 mm PBGA	27 mm PBGA		Signal	17 mm PBGA	27 mm PBGA
EXT_REQ[1]#	T11	Y17		EXT_GNT[1]#	R1	V5
EXT_REQ[2]#	R12	V16		EXT_GNT[2]#	R4	W5
EXT_REQ[3]#	N13	W17		EXT_GNT[3]#	T3	Y5
EXT_REQ[4]#	P13	Y18		EXT_GNT[4]#	P4	V6
EXT_REQ[5]#	T12	U16		EXT_GNT[5]#	R5	U7
EXT_REQ[6]#	R13	V17		EXT_GNT[6]#	T4	W6

© 2019 Renesas Electronics Corporation

Table 61: Pin Assignments for Power (V_{DD})

17 mm PBGA				27 mm PBGA		
A16[a]	F12	M5		D2	D15	T2
B2[a]	G5	M6		V3	F4	D20
E5	G12	M7		U12	F17	B2
E6	H5	M8		Y19	K4	R3[a]
E7	H12	M9		U19	L17	-
E8	J5	M10		G18	R4	-
E9	J12	M11		C19	R17	-
E10	K5	M12		D16	U6	-
E11	K12	N1[a]		A5	U10	-
E12	L5	R15[a]		D6	U15	-
F5	L12	-		D11	E2	-

a. These power pins are called VH. These pins must be connected to the highest voltage level that the QSpan II I/Os will observe on either the QBus or the PCI bus (see Table 62).

Table 62: Voltage Required to be Applied to VH

PCI Bus Voltage (V)	QBus Voltage (V)	VH Voltage (V)
3.3	3.3	3.3
5	5	5
3.3	5	5
5	3.3	5
VIO[a]	3.3	VIO[a]
VIO[a]	5	5

a. VIO denotes the signal connection to the PCI bus connector for Universal Signaling.

© 2019 Renesas Electronics Corporation

Table 63: Pin Assignments for Ground (V_{SS})

17 mm PBGA				27 mm PBGA		
F6	H6	K6		F1	A12	U8
F7	H7	K7		U1	A8	U13
F8	H8	K8		V1	A1	U17
F9	H9	K9		V9	D4	-
F10	H10	K10		H19	D8	-
F11	H11	K11		D19	D13	-
G6	J6	L6		D1	D17	-
G7	J7	L7		P3	H4	-
G8	J8	L8		W7	H17	-
G9	J9	L9		W19	N4	-
G10	J10	L10		T17	N17	-
G11	J11	L11		L20	U4	-

Table 64: No-connect Pin Assignments[a]

17 mm PBGA		27 mm PBGA		
A1		A15	H18	T20
B13		A16	H20	V4
D13		A17	K2	V15
E2		B9	L19	W16
L3		C3	P1	Y3
R14		F3	P17	Y4
R16		G1	R18	Y6
T15		G4	R19	-

a. Route all N/C signals out to vias on your board to allow for future migration to new QSpan II variants.

© 2019 Renesas Electronics Corporation

17.4 Pinout

Table 65: Pinout of 17x17 mm Package

A1. N/C	D5. D[21]	G9. VSS	K13. TDO	P1. AD[30]
A2. D[25]	D6. A[23]	G10. VSS	K14. BDIP_	P2. AD[29]
A3. D[23]	D7. A[17]	G11. VSS	K15. TDI	P3. AD[26]
A4. D[22]	D8. QCLK	G12. VDD	K16. BG_	P4. EXT_GNT[4]#
A5. DP[0]	D9. D[14]	G13. DREQ_	L1. BR_	P5. AD[21]
A6. A[25]	D10. D[12]	G14. A[0]	L2. BB_/BGACK_	P6. AD[16]
A7. A[21]	D11. A[12]	G15. A[2]	L3. N/C	P7. FRAME#
A8. A[20]	D12. A[10]	G16. A[1]	L4. BURST_/TIP_	P8. PCLK
A9. A[16]	D13. N/C	H1. TMODE[1]	L5. VDD	P9. AD[15]
A10. D[17]	D14. D[7]	H2. HS_LED	L6. VSS	P10. AD[11]
A11. D[13]	D15. D[4]	H3. SCL	L7. VSS	P11. AD[9]
A12. A[14]	D16. D[3]	H4. IMSEL	L8. VSS	P12. AD[7]
A13. A[13]	E1. A[29]	H5. VDD	L9. VSS	P13. EXT_REQ[4]#
A14. TEST2	E2. N/C	H6. VSS	L10. VSS	P14. AD[6]
A15. A[9]	E3. A[27]	H7. VSS	L11. VSS	P15. AD[3]
A16. VH	E4. A[28]	H8. VSS	L12. VDD	P16. CSPCI_
B1. D[28]	E5. VDD	H9. VSS	L13. TC3	R1. EXT_GNT[1]#
B2. VH	E6. VDD	H10. VSS	L14. TC1	R2. AD[24]
B3. D[26]	E7. VDD	H11. VSS	L15. BERR_/TEA_	R3. AD[25]
B4. D[24]	E8. VDD	H12. VDD	L16. AS_	R4. EXT_GNT[2]#
B5. DP[2]	E9. VDD	H13. TCK	M1. HALT_/TRETRY_	R5. EXT_GNT[5]#
B6. D[20]	E10. VDD	H14. TRST_	M2. RST#	R6. AD[19]
B7. A[22]	E11. VDD	H15. ENID	M3. GNT#	R7. IRDY#
B8. A[18]	E12. VDD	H16. QINT_	M4. REQ#	R8. DEVSEL#
B9. D[18]	E13. D[6]	J1. PME#	M5. VDD	R9. CBE[1]
B10. D[15]	E14. D[2]	J2. HS_SWITCH	M6. VDD	R10. AD[12]
B11. A[15]	E15. D[1]	J3. TMODE[0]	M7. VDD	R11. CBE[0]
B12. TEST1	E16. A[5]	J4. RESETI_	M8. VDD	R12. EXT_REQ[2]#
B13. N/C	F1. DSACK1_/TA_	J5. VDD	M9. VDD	R13. EXT_REQ[6]#
B14. D[10]	F2. A[31]	J6. VSS	M10. VDD	R14. N/C
B15. D[11]	F3. A[30]	J7. VSS	M11. VDD	R15. VH
B16. A[7]	F4. SIZ[1]	J8. VSS	M12. VDD	R16. N/C
C1. A[26]	F5. VDD	J9. VSS	M13. CSREG_	T1. AD[23]
C2. D[31]	F6. VSS	J10. VSS	M14. INT#	T2. CBE[3]
C3. D[27]	F7. VSS	J11. VSS	M15. SERR#	T3. EXT_GNT[3]#
C4. PCI_ARB_EN	F8. VSS	J12. VDD	M16. TC[2]	T4. EXT_GNT[6]#
C5. DP[1]	F9. VSS	J13. DACK_/SDACK_	N1. VH	T5. AD[18]
C6. A[24]	F10. VSS	J14. BM_EN/FIFO_RDY_	N2. AD[31]	T6. AD[17]
C7. A[19]	F11. VSS	J15. DONE_	N3. AD[27]	T7. STOP#
C8. D[19]	F12. VDD	J16. TMS	N4. AD[28]	T8. AD[14]
C9. D[16]	F13. D[5]	K1. RESETO_	N5. AD[22]	T9. AD[13]
C10. DS_	F14. A[3]	K2. TS_	N6. AD[20]	T10. AD[8]
C11. A[11]	F15. D[0]	K3. PCI_DIS	N7. CBE[2]	T11. EXT_REQ[1]#
C12. TEST3	F16. A[4]	K4. HS_HEALTHY_	N8. TRDY#	T12. EXT_REQ[5]#
C13. A[6]	G1. SDA	K5. VDD	N9. PERR#	T13. AD[5]
C14. A[8]	G2. SIZ[0]	K6. VSS	N10. PAR	T14. AD[4]
C15. D[9]	G3. DSACK0_	K7. VSS	N11. AD[10]	T15. N/C
C16. D[8]	G4. ENUM#	K8. VSS	N12. IDSEL	T16. AD[2]
D1. R/W_	G5. VDD	K9. VSS	N13. EXT_REQ[3]#	
D2. D[30]	G6. VSS	K10. VSS	N14. AD[1]	
D3. D[29]	G7. VSS	K11. VSS	N15. AD[0]	
D4. DP[3]	G8. VSS	K12. VDD	N16. TC[0]	

© 2019 Renesas Electronics Corporation

Table 66: Pinout of 27x27 mm Package

A1. VSS	C13. A[14]	H1. DSACK1_/TA_	P17. N/C	V13. AD[12]
A2. D[26]	C14. A[11]	H2. A[31]	P18. TC[0]	V14. AD[8]
A3. D[22]	C15. TEST3	H3. A[30]	P19. TC[1]	V15. N/C
A4. DP[2]	C16. A[10]	H4. VSS	P20. TC[2]	V16. EXT_REQ[2]#
A5. VDD	C17. A[6]	H17. VSS	R1. BB_/BGACK_	V17. EXT_REQ[6]#
A6. A[24]	C18. D[8]	H18. N/C	R2. BR_	V18. AD[5]
A7. A[22]	C19. VDD	H19. VSS	R3. VH	V19. AD[3]
A8. VSS	C20. D[4]	H20. N/C	R4. VDD	V20. AD[0]
A9. A[17]	D1. VSS	J1. SDA	R17. VDD	W1. AD[28]
A10. QCLK	D2. VDD	J2. SIZ[0]	R18. N/C	W2. AD[27]
A11. D[17]	D3. D[29]	J3. SIZ[1]	R19. N/C	W3. AD[24]
A12. VSS	D4. VSS	J4. DSACK0_	R20. CSPCI_	W4. CBE[3]
A13. DS_	D5. D[24]	J17. DREQ_	T1. HALT_/TRETRY_	W5. EXT_GNT[2]#
A14. A[13]	D6. VDD	J18. ENID	T2. VDD	W6. EXT_GNT[6]#
A15. N/C	D7. D[21]	J19. QINT_	T3. REQ#	W7. VSS
A16. N/C	D8. VSS	J20. TCK	T4. AD[31]	W8. AD[19]
A17. N/C	D9. A[19]	K1. ENUM#	T17. VSS	W9. AD[16]
A18. A[8]	D10. A[16]	K2. N/C	T18. INT#	W10. FRAME#
A19. D[11]	D11. VDD	K3. SCL	T19. CSREG_	W11. PCLK
A20. D[9]	D12. D[12]	K4. VDD	T20. N/C	W12. CBE[1]
B1. D[28]	D13. VSS	K17. DONE_	U1. VSS	W13. AD[13]
B2. VDD	D14. TEST2	K18. TRST_	U2. GNT#	W14. AD[10]
B3. D[25]	D15. VDD	K19. DACK_/SDACK_	U3. AD[29]	W15. CBE[0]
B4. PCI_ARB_EN	D16. VDD	K20. TMS	U4. VSS	W16. N/C
B5. DP[1]	D17. VSS	L1. IMSEL	U5. AD[23]	W17. EXT_REQ[3]#
B6. D[20]	D18. D[5]	L2. HS_LED	U6. VDD	W18. AD[6]
B7. A[23]	D19. VSS	L3. TMODE[1]	U7. EXT_GNT[5]#	W19. VSS
B8. A[20]	D20. VDD	L4. HS_SWITCH	U8. VSS	W20. AD[2]
B9. N/C	E1. A[27]	L17. VDD	U9. AD[17]	Y1. AD[26]
B10. D[18]	E2. VDD	L18. TDI	U10. VDD	Y2. AD[25]
B11. D[15]	E3. A[26]	L19. N/C	U11. PERR#	Y3. N/C
B12. D[14]	E4. D[31]	L20. VSS	U12. VDD	Y4. N/C
B13. A[15]	E17. D[3]	M1. TMODE[0]	U13. VSS	Y5. EXT_GNT[3]#
B14. A[12]	E18. D[2]	M2. PME#	U14. AD[7]	Y6. N/C
B15. TEST1	E19. D[1]	M3. RESETI_	U15. VDD	Y7. AD[21]
B16. A[9]	E20. A[4]	M4. PCI_DIS	U16. EXT_REQ[5]#	Y8. AD[18]
B17. A[7]	F1. VSS	M17. BDIP_	U17. VSS	Y9. CBE[2]
B18. D[10]	F2. A[28]	M18. BG_	U18. AD[1]	Y10. TRDY#
B19. D[7]	F3. N/C	M19. TDO	U19. VDD	Y11. DEVSEL#
B20. D[6]	F4. VDD	M20.BM_EN/FIFO_RDY	U20. SERR#	Y12. PAR
C1. D[30]	F17. VDD	N1. RESETO_	V1. VSS	Y13. AD[14]
C2. D[27]	F18. D[0]	N2.HS_HEALTHY_	V2. AD[30]	Y14. AD[11]
C3. N/C	F19. A[3]	N3. BURST_/TIP_	V3. VDD	Y15. AD[9]
C4. D[23]	F20. A[2]	N4. VSS	V4. N/C	Y16. IDSEL
C5. DP[3]	G1. N/C	N17. VSS	V5. EXT_GNT[1]#	Y17. EXT_REQ[1]#
C6. DP[0]	G2. A[29]	N18. TC[3]	V6. EXT_GNT[4]#	Y18. EXT_REQ[4]#
C7. A[25]	G3. R/W_	N19. BERR_/TEA_	V7. AD[22]	Y19. VDD
C8. A[21]	G4. N/C	N20. AS_	V8. AD[20]	Y20. AD[4]
C9. A[18]	G17. A[5]	P1. N/C	V9. VSS	
C10. D[19]	G18. VDD	P2. TS_	V10. IRDY#	
C11. D[16]	G19. A[1]	P3. VSS	V11. STOP#	
C12. D[13]	G20. A[0]	P4. RST#	V12. AD[15]	

© 2019 Renesas Electronics Corporation

© 2019 Renesas Electronics Corporation

Appendix A: Registers

This Appendix describes the QSpan II's registers. The following topics are discussed:

- "Register Map" on page 195
- "Registers" on page 200

A.1 Overview

The 4 Kbytes of QSpan II Control and Status Registers (QCSRs) promotes host system configuration and allows the user to control QSpan II operational characteristics. The QCSRs are divided into two functional groups: the PCI Configuration Registers and the QSpan II Device Specific Registers. All of the QCSR space is accessible from both the PCI bus and the QBus.

The QSpan II (CA91C862A) is backwards software compatible with the QSpan (CA91C860B, CA91L860B). However, some register differences will be experienced (for example, device ID changes from one version to the other).

© 2019 Renesas Electronics Corporation

A.2 Terminology

G_RST	General reset. Active when either RST# or RESETI_ is driven low or HS_HEALTHY_ is driven high.
N/A	Not applicable
PCI_RST	PCI Reset driven low (RST#) or HS_HEALTHY_ driven high.
0x	Hexadecimal prefix (binary numbers have no prefix)
R	Read Only. Writes have no effect.
R/W	Read/Write from PCI or QBus.
R/W/E	Read/Write from PCI or QBus. Loadable from EEPROM after PCI_RST.
R/WQ	Read/Write from QBus only.
R/WP	Read/Write from PCI only.
R/WQ/E	Read/Write from QBus only. Loadable from EEPROM after PCI_RST.

The bit combinations listed as “Reserved” must not be set to 1. All bits listed as “Reserved” must read back a value of 0.

© 2019 Renesas Electronics Corporation

A.3 Register Map

Table 67: Register Map

Address Offset (Hexidecimal)	Register	Description	See
0x000	PCI_ID	PCI Configuration Space ID Register	Table 69 on page 200
0x004	PCI_CS	PCI Configuration Space Control and Status Register	Table 70 on page 201
0x008	PCI_CLASS	PCI Configuration Class Register	Table 71 on page 204
0x00C	PCI_MISC0	PCI Configuration Miscellaneous 0 Register	Table 72 on page 205
0x010	PCI_BSM/ I20_BAR	PCI Configuration Base Address for Memory Register / $I_2$0 Base Address Register (when $I_2$0 operation is enabled)	Table 73 on page 206
0x014	PCI Unimplemented		-
0x018	PCI_BST0/ PCI_BSM	PCI Configuration Base Address for Target 0 Register/PCI Configuration Base Address for Memory Register (when $I_2$0 operation is enabled)	Table 75 on page 208
0x01C	PCI_BST1	PCI Configuration Base Address for Target 1 Register	Table 77 on page 210
0x020	PCI Unimplemented		-
0x024	PCI Unimplemented		-
0x02C	PCI_SID	PCI Configuration Subsystem ID Register	Table 79 on page 212
0x030	PCI_BSROM	PCI Configuration Expansion ROM Base Address Register	Table 80 on page 213
0x034	PCI_CP	PCI Capabilities Pointer Register	Table 82 on page 215
0x038	PCI Reserved		-
0x03C	PCI_MISC1	PCI Configuration Miscellaneous 1 Register	Table 83 on page 216
0x040–0x0DB	PCI Unimplemented		-
0x0DC	PCI_PMC	PCI Power Management Capabilities Register	Table 84 on page 217
0x0E0	PCI_PMCS	PCI Power Management Control and Status Register	Table 85 on page 218
0x0E4	CPCI_HS	CompactPCI Hot Swap Register	Table 86 on page 219

© 2019 Renesas Electronics Corporation

Table 67: Register Map *(Continued)*

Address Offset (Hexidecimal)	Register	Description	See
0x0E8	PCI_VPD	PCI Vital Product Data (VPD) Register	Table 88 on page 221
0x0EC	VPD_DATA	PCI VPD Data Register	Table 88 on page 221
0x0F0–0x0FF	PCI Unimplemented		-
0x100	PBTI0_CTL	PCI Bus Target Image 0 Control Register	Table 89 on page 222
0x104	PBTI0_ADD	PCI Bus Target Image 0 Address Register	Table 90 on page 224
0x108–10F	Reserved		-
0x110	PBTI1_CTL	PCI Bus Target Image 1 Control Register	Table 92 on page 226
0x114	PBTI1_ADD	PCI Bus Target Image 1 Address Register	Table 93 on page 228
0x118–0x13B	Reserved		-
0x13C	PBROM_CTL	PCI Bus Expansion ROM Control Register	Table 95 on page 230
0x140	PB_ERRCS	PCI Bus Error Control and Status Register	Table 97 on page 232
0x144	PB_AERR	PCI Bus Address Error Log Register	Table 98 on page 234
0x148	PB_DERR	PCI Bus Data Error Log Register	Table 99 on page 235
0x14C–1FF	Reserved		-
0x200	I20_CS	I_20 Control and Status Register	Table 100 on page 236
0x204	IIF_TP	I_20 Inbound Free_List Top Pointer Register	Table 101 on page 238
0x208	IIF_BP	I_20 Inbound Free_List Bottom Pointer Register	Table 102 on page 239
0x20C	IIP_TP	I_20 Inbound Post_List Top Pointer Register	Table 103 on page 240
0x210	IIP_BP	I_20 Inbound Post_List Bottom Pointer Register	Table 104 on page 241
0x214	IOF_TP	I_20 Outbound Free_List Top Pointer Register	Table 105 on page 242

© 2019 Renesas Electronics Corporation

Table 67: Register Map ***(Continued)***

Address Offset (Hexidecimal)	Register	Description	See
0x218	IOF_BP	$I_2$0 Outbound Free_List Bottom Pointer Register	Table 106 on page 243
0x21C	IOP_TP	$I_2$0 Outbound Post_List Top Pointer Register	Table 107 on page 244
0x220	IOP_BP	$I_2$0 Outbound Post_List Bottom Pointer Register	Table 108 on page 245
0x224–3FF	Reserved		-
0x400	IDMA/DMA_CS	IDMA/DMA Control and Status Register	Table 109 on page 246
0x404	IDMA/DMA_PADD	IDMA/DMA PCI Address Register	Table 110 on page 249
0x408	IDMA/DMA_CNT	IDMA/DMA Transfer Count Register	Table 111 on page 250
0x40C	DMA_QADD	DMA QBus Address Register	Table 112 on page 251
0x410	DMA_CS	DMA Control and Status Register	Table 113 on page 252
0x414	DMA_CPP	DMA Command Packet Pointer Register	Table 114 on page 255
0x418–0x4FF	Reserved		-
0x500	CON_ADD	Configuration Address Register	Table 115 on page 256
0x504	CON_DATA	Configuration Data Register	Table 117 on page 258
0x508	IACK_GEN	IACK Cycle Generator Register	Table 118 on page 259
0x50C–0x5FF	Reserved		-
0x600	INT_STAT	Interrupt Status Register	Table 119 on page 260
0x604	INT_CTL	Interrupt Control Register	Table 120 on page 263
0x608	INT_DIR	Interrupt Direction Control Register	Table 121 on page 266
0x60C	INT_CTL2	Interrupt Control Register 2	Table 122 on page 269
0x610–0x6FF	Reserved		-

© 2019 Renesas Electronics Corporation

Table 67: Register Map *(Continued)*

Address Offset (Hexidecimal)	Register	Description	See
0x700	MBOX0	Mailbox 0 Register	Table 123 on page 270
0x704	MBOX1	Mailbox 1 Register	Table 124 on page 271
0x708	MBOX2	Mailbox 2 Register	Table 125 on page 272
0x70C	MBOX3	Mailbox 3 Register	Table 126 on page 273
0x710–0x7FF	Reserved		-
0x800	MISC_CTL	Miscellaneous Control and Status Register	Table 127 on page 274
0x804	EEPROM_CS	EEPROM Control and Status Register	Table 129 on page 277
0x808	MISC_CTL2	Miscellaneous Control 2 Register	Table 130 on page 278
0x810	PARB_CTL	PCI Bus Arbiter Control Register	Table 131 on page 281
0x814–0xEFF	Reserved		-
0xF00	QBSI0_CTL	QBus Slave Image 0 Control Register	Table 133 on page 283
0xF04	QBSI0_AT	QBus Slave Image 0 Address Translation Register	Table 138 on page 285
0xF08–0xF0F	Reserved		-
0xF10	QBSI1_CTL	QBus Slave Image 1 Control Register	Table 140 on page 287
0xF14	QBSI1_AT	QBus Slave Image 1 Address Translation Register	Table 145 on page 289
0xF18–0xF7F	Reserved		-
0xF80	QB_ERRCS	QBus Error Log Control and Status Register	Table 147 on page 291
0xF84	QB_AERR	QBus Address Error Log Register	Table 148 on page 292
0xF88	QB_DERR	QBus Data Error Log Register	Table 149 on page 293
0xF8C–0xFFF	Reserved		-

© 2019 Renesas Electronics Corporation

Table 68: I_2O Memory Map — Lower 4K

Address Offset	Register	Description	Page
0x000–0x02F	Reserved		-
0x030	I2O_OPIS	I_20 Outbound Post_List Interrupt Status Register	Table 150 on page 294
0x034	I2O_OPIM	I_20 Outbound Post_List Interrupt Mask Register	Table 151 on page 295
0x038–0x03C	Reserved		-
0x040	I2O_INQ	I_20 Inbound Queue Register	Table 152 on page 296
0x044	I2O_OUTQ	I_20 Outbound Queue Register	Table 153 on page 297
0x048–0xFFF	Reserved		-

© 2019 Renesas Electronics Corporation

A.4 Registers

Table 69: PCI Configuration Space ID Register

Register Name: PCI_ID	Register Offset: 000

Bits	Function
31–24	DID
23–16	DID
15–08	VID
07–00	VID

PCI_ID Description

Name	Type	Reset By	Reset State	Function
DID[15:0]	R/WQ/E	G_RST	0x0862	Device ID IDT allocated Device Identifier.
VID[15:0]	R/WQ/E	G_RST	0x10E3	Vendor ID PCI SIG allocated vendor Identifier for Tundra. Note: IDT acquired Tundra Semiconductor.

© 2019 Renesas Electronics Corporation

Table 70: PCI Configuration Space Control and Status Register

Register Name: PCI_CS	Register Offset: 004

Bits	Function							
31–24	D_PE	S_SERR	R_MA	R_TA	S_TA	DEVSEL		MD_PED
23–16	TFBBC	Reserved	DEV66	CAP_L	PCI Reserved			
15–08	PCI Reserved						MFFBC	SERR_EN
07–00	WAIT	PERESP	VGAPS	MWI_EN	SC	BM	MS	IOS

PCI_CS Description

Name	Type	Reset By	Reset State	Function
D_PE	R/Write 1 to Clear	PCI_RST	0	Detected Parity Error 0 = No parity error 1 = Parity error This bit is set by the QSpan II whenever: the PCI Master Module detects a data parity error, or the PCI Target Module detects address or data parity errors.
S_SERR	R/Write 1 to Clear	PCI_RST	0	Signaled SERR# 0 = SERR# not asserted 1 = SERR# asserted The QSpan II as PCI target sets this bit when it asserts SERR# to signal an address parity error. SERR_EN must be set before SERR# can be asserted.
R_MA	R/Write 1 to Clear	PCI_RST	0	Received Master-Abort 0 = QSpan II did not generate Master-Abort 1 = QSpan II generated Master-Abort The QSpan II sets this bit when a transaction it initiated had to be terminated with a Master-Abort.
R_TA	R/Write 1 to Clear	PCI_RST	0	Received Target-Abort 0 = Master did not detect Target-Abort 1 = Master detected Target-Abort The QSpan II sets this bit when a transaction it initiated was terminated with a Target-Abort.
S_TA	R/Write 1 to Clear	PCI_RST	0	Signaled Target-Abort 0 = Target did not terminate transaction with Target-Abort 1 = Target terminated transaction with Target-Abort
DEVSEL[1:0]	R	N/A	01	Device Select Device Select Timing The QSpan II is a medium-speed device.

© 2019 Renesas Electronics Corporation

PCI_CS Description *(Continued)*

Name	Type	Reset By	Reset State	Function
MD_PED	R/Write 1 to Clear	PCI_RST	0	Master Data Parity Error Detected 0 = Master Module did not detect/generate data parity error 1 = Master Module detected/generated data parity error The QSpan II sets this bit if the PERESP bit is set and either (a) it is the master of transaction in which it asserts PERR#, or (b) the addressed target asserts PERR#.
TFBBC	R	N/A	1	Target Fast Back-to-Back Capable QSpan II can accept fast back-to-back transactions from different agents.
DEV66	R	N/A	0	Device 66 MHz Capable The QSpan II is not capable of running at 66 MHz: it is a 33 MHz capable device.
CAP_L	R	N/A	1	Capabilities List The QSpan II implements the new Capabilities List. The capabilities pointer at offset 34h is a pointer to a linked list of new capabilities.
MFBBC	R	N/A	0	Master Fast Back-to-Back Enable QSpan II does not generate fast back-to-back transfers.
SERR_EN	R/W	PCI_RST	0	SERR# Enable 0 = Disable SERR# driver 1 = Enable SERR# driver Setting this and PERESP allows the QSpan II to report address parity errors with SERR# as PCI target.
WAIT	R	N/A	0	Wait Cycle Control 0 = No address/data stepping
PERESP	R/W	PCI_RST	0	Parity Error Response 0 = Disable 1 = Enable Controls the QSpan II response to data and address parity errors. When enabled, PERR# is asserted and the MD_PED bit is set in response to data parity errors. When this bit and SERR_EN are set, the QSpan II reports address parity errors on SERR#. QSpan II parity generation (for example., its assertion of PAR#) is unaffected by this bit.
VGAPS	R	N/A	0	VGA Palette Snoop 0 = Disable 1 = Enable

© 2019 Renesas Electronics Corporation

PCI_CS Description *(Continued)*

Name	Type	Reset By	Reset State	Function
MWI_EN	R	PCI_RST	0	Memory Write and Invalidate Enable 0 = Disable 1 = Enable The QSpan II generates Memory Write and Invalidate command as PCI master during IDMA/DMA transfers (CMD bit set in IDMA/DMA_CS).
SC	R	N/A	0	Special Cycles 0 = Disable 1 = Enable The QSpan II never responds to special cycles as PCI target.
BM	R/W	PCI_RST	Powerup Option	Bus Master 0 = Disable 1 = Enable Enables the QSpan II to become PCI bus master. This can be set as a reset option.
MS	R/W	PCI_RST	0	Memory Space 0 = Disable 1 = Enable Enables the QSpan II target to accept Memory space accesses.
IOS	R/W	PCI_RST	0	IO Space 0 = Disable 1 = Enable Enables the QSpan II target to accept I/O space accesses.

The following status bits can generate an external interrupt: D_PE, S_SERR, R_MA, R_TA, S_TA, and MD_PED (for more information, see “Interrupt Generation due to PCI Configuration Register Status Bits” on page 118).

© 2019 Renesas Electronics Corporation

Table 71: PCI Configuration Class Register

Register Name: PCI_CLASS	Register Offset: 008

Bits	Function
31–24	BASE
23–16	SUB
15–08	PROG
07–00	RID

PCI_CLASS Description

Name	Type	Reset By	Reset State	Function
BASE[7:0]	R/WQ/E	PCI_RST	0x06	Base Class Code. 06 - Bridge Device 0Eh = $I_2$0 Controller
SUB[7:0]	R/WQ/E	PCI_RST	0x80	Sub Class Code. 80 - Other Bridge Device (if BASE = 06), 00 - I20 device (if BASE = 0E)
PROG[7:0]	R/WQ/E	PCI_RST	0x00	Programming Interface. 00 = Other Bridge Device (if BASE = 06), 00 = I20 Inbound and Outbound FIFOs at 40h and 44h (if BASE = 0E), 01 = I20 Inbound and Outbound FIFOs at 40h and 44h, and Interrupt Status and Mask registers at 30h and 34h (if BASE = 0E)
RID[7:0]	R	PCI_RST	See Right	Revision ID 0x00 = QSpan II Prototype 0x01 = QSpan II Production Part

© 2019 Renesas Electronics Corporation

Table 72: PCI Configuration Miscellaneous 0 Register

Register Name: PCI_MISC0	Register Offset: 00C

Bits	Function						
31–24	BISTC	SBIST	PCI Reserved		CCODE		
23–16	MFUNCT	LAYOUT					
15–08	LTIMER						0
07–00	0	0	0	0	CLINE	0	0

PCI_MISC0 Description

Name	Type	Reset By	Reset State	Function
BISTC	R	N/A	0	BIST Capable 0 = Device not BIST capable
SBIST	R	N/A	0	Start BIST 0 = Device not BIST capable
CCODE[3:0]	R	N/A	0	Completion Code 0 = Device not BIST capable
MFUNCT	R	N/A	0	Multifunction Device 0 = QSpan II is not a multi-function Device
LAYOUT[6:0]	R	N/A	0	Configuration Space Layout
LTIMER[7:1]	R/W	PCI_RST	0	Latency Timer Number of PCI bus clocks before transaction is terminated.
CLINE[1:0]	R/W	PCI_RST	0	CacheLine Size 00b = treated as 01 01b = 4 x 32-bit word 10b = 8 x 32-bit word All other combinations written to this entry will return a value of zero.

The latency timer supports an increment of two PCI bus clocks. The minimum value is eight PCI bus clocks. The default value corresponds to eight PCI clock cycles.

CLINE[1:0] determines how the PCI Target module accepts burst write data (see “Acceptance of Burst Writes by the PCI Target Module” on page 72). It also determines how the IDMA/DMA Channel sinks data on and sources data from the PCI bus. If CLINE[1:0] is set to 00, the QSpan II treats it as if it were set to 01.

© 2019 Renesas Electronics Corporation

Table 73: PCI Configuration Base Address for Memory Register

Register Name: PCI_BSM	Register Offset: 010

Bits	Function							
31–24	BA							
23–16	BA							
15–08	BA				0	0	0	0
07–00	0	0	0	0	0	0	0	SPACE

PCI_BSM Description

Name	Type	Reset By	Reset State	Function
BA[31:12]	R/W	PCI_ RST	0	Base Address
SPACE	R	N/A	0	PCI Bus Address Space 0 = Memory Space

This register is at this location when the $I_2$0 messaging unit in the QSpan II is not used: the I20_EN bit is set to 0 in the I2O_CS register. If the $I_2$0 messaging unit is enabled, this register is moved to offset 018, and PCI_BST0 register from offset 018 is moved to this offset and renamed I2O_BAR.

This register specifies the 4 Kbyte aligned base address of the QSpan II register space on PCI in Memory Space. The QSpan II register space is 4 Kbytes, therefore the PCI address lines [11:0] are used to select the QSpan II register.

A write must occur to this register before the QSpan II register space can be accessed from the PCI bus. This write can be performed with a PCI configuration transaction or a QBus register access.

© 2019 Renesas Electronics Corporation

Table 74: $I_2$0 Base Address Register

Register Name: I2O_BAR	Register Offset: 010

Bits	Function							
31–24	BA							
23–16	BA							
15–08	0	0	0	0	0	0	0	0
07–00	0	0	0	0	0	0	0	SPACE

I2O_BAR Description

Name	Type	Reset By	Reset State	Function
BA[31:12]	R/W	NONE	0	Base Address
SPACE	R	N/A	0	PCI Bus Address Space 0 = Memory Space

This register is at this location when the I_2O messaging unit in the QSpan II is enabled: the I2O_EN bit is set to 1 in I2O_CS register. When the I2O_EN bit is set, the first Base address register must provide a window to the QBus memory space. Essentially, the PCI_BST0 register is moved from register offset 018 to 010 (see Table 75 for more information about the programming options).

The lower 4K of this space is reserved. The region above this space provides a window to the QBus memory.

© 2019 Renesas Electronics Corporation

Table 75: PCI Configuration Base Address for Target 0 Register

Register Name: PCI_BST0	Register Offset: 018

Bits	Function							
31–24	BA							
23–16	BA							
15–08	0	0	0	0	0	0	0	0
07–00	0	0	0	0	PREF	0	0	PAS

PCI_BST0 Description

Name	Type	Reset By	Reset State	Function
BA[31:16]	See Below	PCI_RST	0	Base Address of PCI bus Target Image 0
PREF	R/WQ/E	PCI_RST	See Below	Prefetchable 0 = Not Prefetchable 1 = Prefetchable (reads have no side effects)
PAS	R	PCI_RST	See Below	PCI Bus Address Space 0 = Memory Space 1 = I/O Space

This register is enabled if the state of the SDA pin or ENID pin is latched as high during PCI reset and bit 5 of byte 7 of the EEPROM is 1 (for information, see “Mapping of EEPROM Bits to QSpan II Registers” on page 124). This register is also enabled if the power-up option PCI_DIS is latched high during Reset. If this register is not enabled — for example, there is no EEPROM or bit 5 of byte 7 of the EEPROM is 0 — the entire register is read only, and reads return all 0s.

If enabled, this register specifies the Base Address and PCI Bus Address Space settings for PCI Bus Target Image 0. The Base Address is used during transaction decoding; it specifies the contiguous PCI bus address line values compared by the QSpan II during PCI bus address phases. The number of address lines compared for this image is based on the value of the Block Size field in the PBTI0_CTL register (see Table 89 on page 222 and “Transaction Decoding” on page 59 for more information).

If this register is enabled, the number of writable bits in BA[31:16] is determined by the Block Size field of the PBTI0_CTL register. After power-up the serial EEPROM contents are loaded and a PCI host can write all 1s to the BA field of this register. The number of 1s that are read back can be used to compute the block size of the image (Block Size = 64Kbytes * 2^N). For example, if the Block Size is 64 Kbytes (BS=0000) then the BA field will be 0xFFFF. If the Block Size is 2 Gbytes (BS = 1111) then the BA field will be 0x8000.

© 2019 Renesas Electronics Corporation

The PREF bit can be loaded from the EEPROM, or programmed from QBus. This bit does not enable prefetching on the QBus. The PREN bit in PBTI0_CTL register must be set to enable prefetching on QBus.

Table 76: PCI Address Lines Compared as a Function of Block Size

BS	Block Size	Address Lines Compared
0000	64 Kbytes	AD31–AD16
0001	128 Kbytes	AD31–AD17
0010	256 Kbytes	AD31–AD18
0011	512 Kbytes	AD31–AD19
0100	1 Mbyte	AD31–AD20
0101	2 Mbytes	AD31–AD21
0110	4 Mbytes	AD31–AD22
0111	8 Mbytes	AD31–AD23
1000	16 Mbytes	AD31–AD24
1001	32 Mbytes	AD31–AD25
1010	64 Mbytes	AD31–AD26
1011	128 Mbytes	AD31–AD27
1100	256 Mbytes	AD31–AD28
1101	512 Mbytes	AD31–AD29
1110	1 Gbyte	AD31–AD30
1111	2 Gbytes	AD31

© 2019 Renesas Electronics Corporation

Table 77: PCI Configuration Base Address for Target 1 Register

Register Name: PCI_BST1	Register Offset: 01C

Bits	Function							
31–24	BA							
23–16	BA							
15–08	0	0	0	0	0	0	0	0
07–00	0	0	0	0	PREF	0	0	PAS

PCI_BST1 Description

Name	Type	Reset By	Reset State	Function
BA[31:16]	See Below	PCI_RST	0	Base Address of PCI Target Image 1
PREF	R/WQ/E	PCI_RST	See Below	Prefetchable 0 = Not Prefetchable 1 = Prefetchable (reads have no side effects)
PAS	R	PCI_RST	See Below	PCI Bus Address Space of PCI Target Image 1 0 = Memory Space 1 = I/O Space

This register is enabled if the state of the SDA or ENID pin is latched as high during PCI reset and bit 7 of byte 8 of the EEPROM is 1. This register is also enabled if the power-up option PCI_DIS is latched high during Reset. If this register is not enabled (for example, there is no EEPROM or bit 7 of byte 8 of the EEPROM is 0), the entire register is read only, and reads return all zeros.

If enabled this register specifies the Base Address and PAS fields for PCI Bus Target Image 1. The Base Address is used during transaction decoding; it specifies the contiguous PCI bus address line values compared by the QSpan II during PCI bus address phases. The number of address lines compared for this image is based on the value of the Block Size field in the PBTI1_CTL register. (see “Transaction Decoding” on page 59).

If this register is enabled, the number of writable bits in BA[31:16] is determined by the Block Size field of the PBTI1_CTL register (see Table 92 on page 226). After power-up the serial EEPROM contents are loaded and a PCI host can write all 1s to the BA field of this register. The number of 1s that are read back can be used to compute the block size of the image (Block Size = 64Kbytes * 2^N). For example, if the Block Size is 64 Kbytes (BS=0000) then the BA field will be 0xFFFF. If the Block Size is 2 Gbytes (BS = 1111), then the BA field will be 0x8000.

© 2019 Renesas Electronics Corporation

The PREF bit can be loaded from the EEPROM, or written from the QBus. The PREN bit in PBTI1_CTL register must be set to enable QSpan II to perform prefetched reads on the QBus.

Table 78: PCI Address Lines Compared as a Function of Block Size

BS	Block Size	Address Lines Compared
0000	64 Kbytes	AD31–AD16
0001	128 Kbytes	AD31–AD17
0010	256 Kbytes	AD31–AD18
0011	512 Kbytes	AD31–AD19
0100	1 Mbyte	AD31–AD20
0101	2 Mbytes	AD31–AD21
0110	4 Mbytes	AD31–AD22
0111	8 Mbytes	AD31–AD23
1000	16 Mbytes	AD31–AD24
1001	32 Mbytes	AD31–AD25
1010	64 Mbytes	AD31–AD26
1011	128 Mbytes	AD31–AD27
1100	256 Mbytes	AD31–AD28
1101	512 Mbytes	AD31–AD29
1110	1 Gbyte	AD31–AD30
1111	2 Gbytes	AD31

© 2019 Renesas Electronics Corporation

Table 79: PCI Configuration Subsystem ID Register

Register Name: PCI_SID	Register Offset: 02C

Bits	Function
31–24	SID
23–16	SID
15–08	SVID
07–00	SVID

PCI_SID Description

Name	Type	Reset By	Reset State	Function
SID[15:0]	R/WQ/E	PCI_RST	See Below	Subsystem ID Values for Subsystem ID are vendor specific.
SVID[15:0]	R/WQ/E	PCI_RST	See Below	Subsystem Vendor ID Subsystem Vendor IDs are obtained from the PCI SIG and are used to identify the vendor of the add-in board or subsystem.

The Subsystem ID and the Subsystem Vendor ID is loaded from an external serial EEPROM at the end of the PCI bus reset (RST#); if the state of the SDA pin or ENID pin is latched as high during the reset. If the state of the SDA pin or ENID pin is latched as low, the reset state of the register will be all zeros.

Writes to the PCI_SID register from the QBus will propagate to its contents, except while the QSpan II is updating its contents from the EEPROM. Writes to the PCI_SID register from the PCI bus do not affect its contents.

© 2019 Renesas Electronics Corporation

Table 80: PCI Configuration Expansion ROM Base Address Register

Register Name: PCI_BSROM	Register Offset: 030

Bits	Function							
31–24	BA							
23–16	BA							
15–08	0	0	0	0	0	0	0	0
07–00	0	0	0	0	0	0	0	EN

PCI_BSROM Description

Name	Type	Reset By	Reset State	Function
BA[31:16]	See Below	PCI_RST	See Below	Expansion ROM Base Address
EN	See Below	PCI_RST	0	Enable Address Decode 0 = Disable 1 = Enable

The number of writable bits in BA[31:16] determines the size of the external QBus Expansion ROM (for more information, see the *PCI Local Bus Specification* 2.2).

The number of bits itself is determined by the Block Size field of the PCI Expansion ROM Control register (see “PBROM_CTL” on page 230). After power-up a PCI host can write all 1s to the BA field of this register. The number of 1s that are read-back will indicate the size of the Expansion ROM of the QSpan II.

This register is enabled if bit 7 of byte 5 of the EEPROM is latched as 1 (see Table 44 on page 125). If the state of this bit is 0 or if the state of the SDA pin or ENID pin is latched as low during PCI reset, then all bits in the entire register will be set to 0 and will be read only.

© 2019 Renesas Electronics Corporation

The PCI Expansion ROM Base Address register can be written from either bus, if write enabled, except while the QSpan II is loading data from an external serial EEPROM. Writes to bits in the PCI Expansion ROM Base Address register that are not write enabled will have no effect.

Table 81: Writable BA bits as a function of Block Size

BS	Block Size	Read/Write Bits
000	64 Kbytes	BA31–BA16
001	128 Kbytes	BA31–BA17
010	256 Kbytes	BA31–BA18
011	512 Kbytes	BA31–BA19
100	1 Mbyte	BA31–BA20
101	2 Mbytes	BA31–BA21
110	4 Mbytes	BA31–BA22
111	8 Mbytes	BA31–BA23

© 2019 Renesas Electronics Corporation

Table 82: PCI Capabilities Pointer Register

Register Name: PCI_CP	Register Offset: 034

Bits	Function
31–24	PCI Reserved
23–16	PCI Reserved
15–08	PCI Reserved
07–00	CAP_PT

PCI_CP Description

Name	Type	Reset By	Reset State	Function
CAP_PT[7:0]	R	PCI_RST	0xDC	Capabilities Pointer Points to the first entry of the linked list of new capabilities implemented by QSpan II.

© 2019 Renesas Electronics Corporation

Table 83: PCI Configuration Miscellaneous 1 Register

Register Name: PCI_MISC1	Register Offset: 03C

Bits	Function
31–24	MAX_LAT
23–16	MIN_GNT
15–08	INT_PIN
07–00	INT_LINE

PCI_MISC1 Description

Name	Type	Reset By	Reset State	Function
MAX_LAT[7:0]	R/WQ/E	PCI_RST	0	Maximum Latency
MIN_GNT[7:0]	R/WQ/E	PCI_RST	0	Minimum Grant
INT_PIN[7:1]	R	PCI_RST	0	Interrupt Pin (7 to 1)
INT_PIN[0]	R/WQ/E	PCI_RST	See below	Interrupt Pin 0
INT_LINE[7:0]	R/W	PCI_RST	0x00	Interrupt Line

The INT_PIN[0] can be loaded from the serial EEPROM or written from the QBus, before configuration by an external Host. A value of 1 indicates that the QSpan II uses a single PCI interrupt (INT#). A value of 0 indicates that the QSpan II does not use any PCI interrupts.

When QSpan II is setup to not use any PCI interrupts, it is up to an external agent to set the INT_LINE to the appropriate value.

© 2019 Renesas Electronics Corporation

Table 84: PCI Power Management Capabilities Register

Register Name: PCI_PMC	Register Offset: 0DC

Bits	Function						
31–24	PME_SP				D2_SP	D1_SP	Reserved
23–16	Reserved	DSI	APS	PME_CLK	PM_VER		
15–08	NXT_IP						
07–00	CAP_ID						

PCI_PMC Description

Name	Type	Reset By	Reset State	Function
PME_SP[4:0]	R/WQ/E	PCI_RST	0	PME_Support Indicates the power states in which QSpan II asserts PME#. 0X001b = PME# can be asserted from D0 0100Xb = PME# can be asserted from $D3_{hot}$ Bits 4, 2 and 1 are set to 0, since QSpan II never asserts PME# when in $D3_{cold}$, D2 or D1.
D2_SP	R	PCI_RST	0	D2 Support Set to 0 to indicate that D2 power state is not supported.
D1_SP	R	PCI_RST	0	D1 Support Set to 0 to indicate that D1 power state is not supported.
DSI	R/WQ/E	PCI_RST	0	Device-Specific Initialization.
APS	R	PCI_RST	0	Auxiliary Power Source Set to 0, since PME# is not supported from $D3_{cold.}$
PME_CLK	R	PCI_RST	0	PME Clock Set to 1 to indicate that a clock is required to assert PME# when any of the PME_SP bits are set to 1. Set to 0 when all the PME_SP bits are 0.
PM_VER[2:0]	R/WQ/E	PCI_RST	001	Power Management Version A value of 001 indicates that this device complies with Revision 1.0 of the *PCI Power Management Interface Specification 1.1*.
NXT_IP[7:0]	R	PCI_RST	0xE4	Next Item Pointer Set to 0xE4 to indicate that the next item in the QSpan II capabilities list (Compact PCI Hot Swap) is located at offset E4h.
CAP_ID[7:0]	R	PCI_RST	0x01	Capability ID Set to 0x01 to identify the linked list item as PCI Power Management Register.

© 2019 Renesas Electronics Corporation

Table 85: PCI Power Management Control and Status Register

Register Name: PCI_PMCS	Register Offset: 0E0

Bits	Function			
31–24	Reserved			
23–16	P2P_BSE			
15–08	PME_ST	Reserved		PME_EN
07–00	Reserved		PWR_ST	

PCI_PMCS Description

Name	Type	Reset By	Reset State	Function
P2P_BSE[7:0]	R	PCI_RST	0x00	PCI to PCI Bridge Support Extensions
PME_ST	R/Write 1 to clear	PCI_RST	0	PME_Status This bit is set when QSpan II would normally assert PME#, regardless of PME_EN bit.
PME_EN	R/W	PCI_RST	0	PME Enable 0 = Disable 1 = Enable Enables the QSpan II to assert PME#.
PWR_ST[1:0]	R/W	PCI_RST	0	Power State This field is used to both determine the current power state and set the QSpan II into a new power state. If an unimplemented power state is written to this register, the QSpan II completes the write, but ignores the write data. D0 and $D3_{hot}$ are the only states implemented. 00b: D0 11b: D3hot

© 2019 Renesas Electronics Corporation

Table 86: CompactPCI Hot Swap Register

Register Name: CPCI_HS	Register Offset: 0E4

Bits	Function							
31–24	Reserved							
23–16	INS	EXT	Reserved	Reserved	LOO	Reserved	EIM	Reserved
15–08	NXT_IP							
07–00	CAP_ID							

CPCI_HS Description

Name	Type	Reset By	Reset State	Function
INS	R/Write 1 to clear	PCI_RST	0	ENUM# Status Insertion 0 = Not asserted 1 = ENUM# asserted The QSpan II sets this bit when EEPROM load is completed and PCI Disable bit (PCI_DIS in MISC_CTL2) is cleared.
EXT	R/Write 1 to clear	PCI_RST	0	ENUM# Status Extraction 0 = Not asserted 1 = ENUM# asserted The QSpan II sets this bit when HS_SWITCH is sampled high and RST# is negated.
LOO	R/W	PCI_RST	0	LED On/Off 0 = LED off 1 = LED on
EIM	R/W	PCI_RST	0	ENUM# Interrupt Mask 0 = Enable Interrupt 1 = Mask Interrupt
NXT_IP[7:0]	R/W	PCI_RST	See Below	Next Item Pointer
CAP_ID[7:0]	R/W	PCI_RST	0x06	Capability ID Set to 0x06 to identify the linked list item as Compact PCI Hot Swap Register.

If the QSpan II is enabled for Vital Product Data (VPD) access, the next pointer will point to the VPD register (NXT_IP = 0xE8). Otherwise NXT_IP will be set to 0x00, which indicates that it is the last item in the Capabilities Linked List.

© 2019 Renesas Electronics Corporation

Table 87: PCI Vital Product Data Register

Register Name: PCI_VPD	Register Offset: 0E8

Bits	Function	
31–24	VPD_F	Reserved
23–16	VPD_ADDR	
15–08	NXT_IP	
07–00	CAP_ID	

PCI_VPD Description

Name	Type	Reset By	Reset State	Function
VPD_F	R/W	PCI_RST	0	VPD Flag Initiates a VPD serial EEPROM access and indicates completion. When written with a 1, QSpan II writes the 4 bytes in VPD_DATA to the EEPROM. QSpan II sets VPD_F to 0, when the write is complete. When written with a 0, QSpan II reads the 4 bytes from the EEPROM and store them in VPD_DATA. QSpan II sets VPD_F to 1, when the read is complete.
VPD_ADDR [7:0]	R/W	PCI_RST	0x00	VPD Address 4 byte aligned byte address of the VPD to be accessed.
NXT_IP[7:0]	R	PCI_RST	0x00	Next Item Pointer This is the last item in the linked list, so the pointer is set to 0.
CAP_ID[7:0]	R	PCI_RST	0x03	Capability ID Set to 0x03 to indicate that this linked list register supports the Vital Product Data access.

© 2019 Renesas Electronics Corporation

Table 88: PCI VPD Data Register

Register Name: VPD_DATA	Register Offset: 0EC

Bits	Function
31–24	VPD_DATA
23–16	VPD_DATA
15–08	VPD_DATA
07–00	VPD_DATA

PCI_VPD Description

Name	Type	Reset By	Reset State	Function
VPD_DATA [31:0]	R/W	PCI_RST	0	VPD Data This contains the VPD read or write data. On a read, this register will be valid, after the read was initiated and the QSpan II sets the VPD_F bit to 1. On a write, the data should be written to this field before the write is initiated by writing to the PCI_VPD register. VPD_DATA[7:0] will contain the byte specified by the VPD_ADDR.

© 2019 Renesas Electronics Corporation

Table 89: PCI Bus Target Image 0 Control Register

Register Name: PBTI0_CTL	Register Offset: 100

Bits	Function					
31–24	EN	Reserved		BS		
23–16	PREN	BRSTWREN	Reserved	INVEND	Reserved	
15–08	TC			DSIZE	Reserved	
07–00	PWEN	PAS	Reserved			

PBTI0_CTL Description

Name	Type	Reset By	Reset State	Function
EN	R/W	G_RST	0	Image Enable 0 = Disable 1 = Enable
BS[3:0]	See Below	PCI_RST	See Below	Block Size (64 Kbyte*2^{BS})
PREN	R/W	G_RST	0	Prefetch Read Enable 0 = Disable 1 = Enable
BRSTWREN	R/W	G_RST	0	Burst Write Enable 0 = Disable 1 = Enable
INVEND	R/W	G_RST	0	Invert Endianness from QB_BOC Setting in MISC_CTL 0 = Use QB_BOC setting 1 = Invert QB_BOC setting
TC[3:0]	R/W	G_RST	0	QBus Transaction Code User Defined
DSIZE	R/W	G_RST	0	QBus Destination Port Size 00b = 32-bit 01b = 8-bit 10b = 16-bit 11b = Reserved
PWEN[a]	R/W	G_RST	0	Posted Write Enable 0 = Disable 1 = Enable
PAS	See Below	PCI_RST	See Below	PCI Bus Address Space 0 = PCI Bus Memory Space 1 = PCI Bus I/O Space

a. Only PCI bus memory space transactions can be posted.

© 2019 Renesas Electronics Corporation

The BS[3:0] and PAS fields can be loaded from an external serial EEPROM (see "Mapping of EEPROM Bits to QSpan II Registers" on page 124). There are three cases:

1. If the fields are loaded from the EEPROM, then the EEPROM determines their reset state, and they become read only (except as described in (3)). In this case, the PAS bit has the same value as the bit of the same name in the PCI_BST0 register (see Table 75 on page 208).
2. If the BS[3:0] and PAS fields are not loaded from the EEPROM, their reset state is 0, and they are writable. Note that in this case the PCI_BST0 register is disabled.
3. If the power-up option (PCI_DIS) is set high during reset, then BS[3:0] and PAS fields are writable from the QBus, even if they were loaded from the EEPROM.

© 2019 Renesas Electronics Corporation

Table 90: PCI Bus Target Image 0 Address Register

Register Name: PBTI0_ADD	Register Offset: 104

Bits	Function
31–24	BA
23–16	BA
15–08	TA
07–00	TA

PBTI0_ADD Description

Name	Type	Reset By	Reset State	Function
BA[31:16]	See Below	PCI_RST	See below	Base Address
TA[31:16]	R/W	G_RST	0	Translation Address

The Base Address specifies the contiguous PCI bus address line values compared by the QSpan II during PCI bus address phases. The number of address lines compared for this image is based on the Block Size (programmed in the PBTI0_CTL register on Table 89 on page 222).

The Translation Address specifies the values of the address lines substituted when generating the address for the transaction on the QBus. If no translation is to occur, the Translation Address must be programmed with the same value as that of the Base Address (see “Transaction Decoding” on page 59 and “Address Translation” on page 40 for more details).

© 2019 Renesas Electronics Corporation

Table 91: PCI Address Lines Compared as a Function of Block Size

BS	Block Size	Address Lines Compared/Translated
0000	64 Kbytes	AD31–AD16
0001	128 Kbytes	AD31–AD17
0010	256 Kbytes	AD31–AD18
0011	512 Kbytes	AD31–AD19
0100	1 Mbyte	AD31–AD20
0101	2 Mbytes	AD31–AD21
0110	4 Mbytes	AD31–AD22
0111	8 Mbytes	AD31–AD23
1000	16 Mbytes	AD31–AD24
1001	32 Mbytes	AD31–AD25
1010	64 Mbytes	AD31–AD26
1011	128 Mbytes	AD31–AD27
1100	256 Mbytes	AD31–AD28
1101	512 Mbytes	AD31–AD29
1110	1 Gbyte	AD31–AD30
1111	2 Gbytes	AD31

The read/write type and reset value of the BA[31:16] field depends on whether the PCI_BST0 register (see Table 75 on page 208) is “enabled” (for example, whether bit 5 of byte 7 of the EEPROM is 1 or power-up pin PCI_DIS is latched high during PCI reset). There are two cases:

1. If the EEPROM bit is 1 or PCI_DIS is latched high, the BA field of PBTI0_ADD is read only and has the same value as the PCI_BST0 register from reset onwards.
2. If one of the following occurs then the entire BA field of PBTI0_ADD is readable and writable: the EEPROM bit was 0, the SDA pin and ENID pins are 0 at PCI reset, or PCI_DIS is latched low. A read from this field after reset returns all 0s. In this case, the BA field of this register is independent of the PCI_BST0 register (the PCI_BST0 register does not exist).

The presence of EEPROM does not affect TA[31:16].

© 2019 Renesas Electronics Corporation

Table 92: PCI Bus Target Image 1 Control Register

Register Name: PBTI1_CTL	Register Offset: 110

Bits	Function				
31–24	EN	Reserved		BS	
23–16	PREN	BRSTWREN	Reserved	INVEND	Reserved
15–08	TC			DSIZE	Reserved
07–00	PWEN	PAS	Reserved		

PBTI1_CTL Description

Name	Type	Reset By	Reset State	Function
EN	R/W	G_RST	0	Image Enable 0 = Disable 1 = Enable
BS[3:0]	See Below	PCI_RST	See Below	Block Size (64 Kbyte*2^{BS})
PREN	R/W	G_RST	0	Prefetch Read Enable 0 = Disable 1 = Enable
BRSTWREN	R/W	G_RST	0	Burst Write Enable 0 = Disable 1 = Enable
INVEND	R/W	G_RST	0	Invert Endian-ness from QB_BOC Setting in MISC_CTL 0 = Use QB_BOC setting 1 = Invert QB_BOC setting
TC[3:0]	R/W	G_RST	0	QBus Transaction Code User Defined
DSIZE[1:0]	R/W	G_RST	0	QBus Destination Port Size 00b = 32-bit 01b = 8-bit 10b = 16-bit 11b = Reserved
PWEN[a]	R/W	G_RST	0	Posted Write Enable 0 = Disable 1 = Enable
PAS	See Below	PCI_RST	See Below	PCI Bus Address Space 0 = PCI Bus Memory Space 1 = PCI Bus I/O Space

a. Only PCI bus Memory Space transactions can be posted.

© 2019 Renesas Electronics Corporation

The BS[3:0] and PAS fields can be loaded from an external serial EEPROM. (see “Mapping of EEPROM Bits to QSpan II Registers” on page 124) for more details). There are three cases:

1. If the BS[3:0] and PAS fields are loaded from the EEPROM, then the EEPROM determines their reset state and they become read only; except as described in 3. In this case, the PAS bit has the same value as the bit of the same name in the PCI_BST1 register (see Table 77 on page 210).
2. If the fields are not loaded from the EEPROM, their reset state is 0, and they are writable. Note that in this case the PCI_BST1 register is disabled.
3. If the power-up option (PCI_DIS) is set high during reset, then BS[3:0] and PAS fields are writable from the QBus, even if they were loaded from the EEPROM.

© 2019 Renesas Electronics Corporation

Table 93: PCI Bus Target Image 1 Address Register

Register Name: PBTI1_ADD	Register Offset: 114

Bits	Function
31–24	BA
23–16	BA
15–08	TA
07–00	TA

PBTI1_ADD Description

Name	Type	Reset By	Reset State	Function
BA[31:16]	See Below	PCI_RST	See Below	Base Address See Note
TA[31:16]	R/W	G_RST	0	Translation Address

The Base Address specifies the contiguous PCI bus address line values compared by the QSpan II during PCI bus address phases. The number of address lines compared for this image is based on the Block Size (programmed in the PBTI1_CTL register on Table 92 on page 226).

The Translation Address specifies the values of the address lines substituted when generating the address for the transaction on the QBus. If no translation is to occur, the Translation Address must be programmed with the same value as that of the Base Address (see “Transaction Decoding” on page 59 and “Address Translation” on page 40 for more details).

© 2019 Renesas Electronics Corporation

Table 94: PCI Address Lines Compared as a Function of Block Size

BS	Block Size	Address lines Compared/Translated
0000	64 Kbytes	AD31–AD16
0001	128 Kbytes	AD31–AD17
0010	256 Kbytes	AD31–AD18
0011	512 Kbytes	AD31–AD19
0100	1 Mbyte	AD31–AD20
0101	2 Mbytes	AD31–AD21
0110	4 Mbytes	AD31–AD22
0111	8 Mbytes	AD31–AD23
1000	16 Mbytes	AD31–AD24
1001	32 Mbytes	AD31–AD25
1010	64 Mbytes	AD31–AD26
1011	128 Mbytes	AD31–AD27
1100	256 Mbytes	AD31–AD28
1101	512 Mbytes	AD31–AD29
1110	1 Gbyte	AD31–AD30
1111	2 Gbytes	AD31

The read/write type of this register depends on whether the PCI_BST1 register (see Table 77 on page 210) is enabled. For example, whether bit 7 of byte 9 of the EEPROM is 1 or power-up pin PCI_DIS is latched high during PCI reset. There are two cases:

1. If the EEPROM bit is 1 or PCI_DIS pin is latched high, the BA field of PBTI1_ADD is read only and has the same value as the PCI_BST1 register from reset onwards.
2. If the EEPROM bit is 0 (or the SDA pin and ENID pins are 0 at PCI reset) or PCI_DIS pin is latched low, then the entire BA field of PBTI1_ADD is readable and writable. A read from this field after reset returns a 16-bit vector of 0s. In this case, the BA field of this register is independent of the PCI_BST1 register (the PCI_BST1 register does not exist).

The presence of EEPROM does not affect TA[31:16].

© 2019 Renesas Electronics Corporation

Table 95: PCI Bus Expansion ROM Control Register

Register Name: PBROM_CTL	Register Offset: 13C

Bits	Function			
31–24	Reserved			DSIZE
23–16	0	BS	TC	
15–08	TA			
07–00	TA			

PBROM_CTL Description

Name	Type	Reset By	Reset State	Function
DSIZE[1:0]	See Below	PCI_RST	See below	QBus Destination Port Size 00b = 32-bit 01b = 8-bit 10b = 16-bit 11b = reserved
BS[2:0]	See Below	PCI_RST	See below	Block Size (64 Kbyte*2^{BS})
TC[3:0]	See Below	PCI_RST	See below	QBus Transaction Code User Defined
TA[31:16]	See Below	PCI_RST	See below	Translation Address See below

The PCI Bus Expansion ROM Control Register is loaded from an external serial EEPROM at the conclusion of the PCI bus reset (RST#) if the state of the SDA I/O pin or ENID is latched as high during the reset and bit 7 of byte 5 of the EEPROM is a 1 (see “Mapping of EEPROM Bits to QSpan II Registers” on page 124). Otherwise the reset state of the register will be zero and the register will be write disabled.

The PCI Expansion ROM Base Address register specifies the address line values that are compared during the address decoding. The number of address lines that are compared is based upon the value of Block Size value in the PCI Expansion ROM Control register.

The Translation Address field specifies the values of the address lines that are substituted when generating the address for the QBus. If no translation is to occur, the Translation Address field is programmed with the same value as that of the PCI Configuration Expansion ROM Base Address register.

© 2019 Renesas Electronics Corporation

Table 96: PCI Address Lines Compared as a Function of Block Size

BS	Block Size	Address Lines Compared/translated
000	64 Kbytes	A31–A16
001	128 Kbytes	A31–A17
010	256 Kbytes	A31–A18
011	512 Kbytes	A31–A19
100	1 Mbyte	A31–A20
101	2 Mbytes	A31–A21
110	4 Mbytes	A31–A22
111	8 Mbytes	A31–A23

© 2019 Renesas Electronics Corporation

Table 97: PCI Bus Error Log Control and Status Register

Register Name: PB_ERRCS	Register Offset: 140

Bits	Function			
31–24	EN	Reserved		ES
23–16	UNL_QSC	Reserved		
15–08	Reserved			
07–00	CMDERR		BE_ERR	

PB_ERRCS Description

Name	Type	Reset By	Reset State	Function
EN	R/W	G_RST	0	Enable PCI Error Log 0 = disable error logging 1 = enable error logging
ES	R/Write 1 to Clear	G_RST	0	Error Status 0 = no error currently logged, 1 = error currently logged
UNL_QSC	R/W	G_RST	0	Unlock QBus Slave Channel 0 = Transfers in QBus Slave Channel are suspended when ES bit is set 1 = Transfers in QBus Slave Channel continue while ES bit is set
CMD_ERR [3:0]	R	N/A	0111	PCI Command Error Log
BE_ERR[3:0]	R	G_RST	0	PCI Byte Enable Error Log 0 = byte enable active 1 = byte enable inactive

The PCI Master Module sets the ES bit if one of the following occurs:

- a posted write transaction results in a Target-Abort
- a posted write transaction results in a Master-Abort

The assertion of the ES bit can be mapped to the QSpan II's interrupt pins by programming the Interrupt Control and Interrupt Direction Control registers. The mapping of interrupts can only occur if the EN bit in the PCI Bus Error Log register is set.

To disable the PCI Error Logging after it has been enabled, the ES bit must not be set. If ES is set, it can be cleared (by writing a 1) at the same time as a 0 is written to the EN bit.

© 2019 Renesas Electronics Corporation

The BE_ERR field only contains valid information when the ES bit is set. At all other times these fields return all zeros when read.

Setting the UNL_QSC enables the QBus Master to service the QBus Slave Channel while the ES bit is set and the Error log is frozen. The ES bit must be cleared to log a new error. If error logging is enabled, it recommended that the UNL_QSC bit be set to 1.

© 2019 Renesas Electronics Corporation

Table 98: PCI Bus Address Error Log Register

Register Name: PB_AERR	Register Offset: 144

Bits	Function
31–24	PAERR
23–16	PAERR
15–08	PAERR
07–00	PAERR

PB_AERR Description

Name	Type	Reset By	Reset State	Function
PAERR[31:0]	R	G_RST	0	PCI Address Error Log

The QSpan II as PCI master will log errors if a posted write transaction results in a Target-Abort, or a posted write transaction results in a Master-Abort.

This register logs the PCI bus address information. Its content are qualified by bit ES of the PCI Bus Error Log Control and Status Register (see Table 97). The PAERR field contains valid information when the ES bit is set. At all other times a read of this register will return all zeros.

© 2019 Renesas Electronics Corporation

Table 99: PCI Bus Data Error Log Register

Register Name: PB_DERR	Register Offset: 148

Bits	Function
31–24	PDERR
23–16	PDERR
15–08	PDERR
07–00	PDERR

PB_DERR Description

Name	Type	Reset By	Reset State	Function
PDERR[31:0]	R	G_RST	0	PCI Data Error Log

The QSpan II as PCI master will log errors if a posted write transaction results in a Target-Abort, or a posted write transaction results in a Master-Abort.

This register logs the PCI bus data information. Its content are qualified by bit ES of the PCI Bus Error Log Control and Status register (see Table 97). The PDERR field contains valid information when the ES bit is set. At all other times, a read of this register will return all zeros.

© 2019 Renesas Electronics Corporation

Table 100: I_2O Control and Status Register

Register Name: I2O_CS	Register Offset: 200

Bits	Function							
31–24	QIBA							
23–16	QIBA				Reserved			
15–08	IF_E	IP_E	OF_E	OP_E	IF_F	IP_F	OF_F	OP_F
07–00	Reserved	FIFO_SIZE			Reserved	Reserved	RR_BP	I2O_EN

I2O_CS Description

Name	Type	Reset By	Reset State	Function
QIBA[31:20]	R/W	G_RST	0	QBus I_2O Base Address Base address of the block of memory that contains the four FIFOs in QBus memory. The four FIFOs (two Inbound and two Outbound) are of equal size, but need not be in contiguous memory locations. QIBA is aligned to a 1-Mbyte address boundary.
IF_E	R	G_RST	1	Inbound Free_List FIFO Empty 0 = Not Empty 1 = Empty
IP_E	R	G_RST	1	Inbound Post_List FIFO Empty 0 = Not Empty 1 = Empty
OF_E	R	G_RST	1	Outbound Free_List FIFO Empty 0 = Not Empty 1 = Empty
OP_E	R	G_RST	1	Outbound Post_List FIFO Empty 0 = Not Empty 1 = Empty
IF_F	R	G_RST	0	Inbound Free_List FIFO Full 0 = Not Full 1 = Full
IP_F	R	G_RST	0	Inbound Post_List FIFO Full 0 = Not Full 1 = Full
OF_F	R	G_RST	0	Outbound Free_List FIFO Full 0 = Not Full 1 = Full

© 2019 Renesas Electronics Corporation

I2O_CS Description *(Continued)*

Name	Type	Reset By	Reset State	Function
OP_F	R	G_RST	0	Outbound Post_List FIFO Full 0 = Not Full 1 = Full
FIFO_SIZE [2:0]	R/W	G_RST	0	This field specifies the size of the circular FIFO. All four FIFOs are the same size and queue 32-bit entries. Total FIFO memory allocation is four times the single FIFO size. 000b = 256 entries (1 Kbyte FIFO size) 001b = 1K entries (4 Kbyte FIFO size) 010b = 4K entries (16 Kbyte FIFO size) 011b = 16K entries (64 Kbyte FIFO size) 100b = 64K entries (256 Kbyte FIFO size) others = Reserved
RR_BP	R/W	G_RST	0	Register Read of Bottom Pointer 0 = Register read of bottom pointer will return value of bottom pointer 1 = same as 0, except when the top and bottom pointers are equal, returns 0xFFFFFFFF
I2O_EN	R/W	G_RST	0	I_2O Enable 0 = accesses to I_2O Inbound and Outbound Queue are enabled 1 = accesses to I_2O Inbound and Outbound Queue are disabled. Writes are accepted but ignored, reads return 0xFFFF FFFF. All pointer initialization and frame allocation should be completed before enabling this bit.

© 2019 Renesas Electronics Corporation

Table 101: I_2O Inbound Free_List Top Pointer Register

Register Name: IIF_TP	Register Offset: 204

Bits	Function		
31–24	QIBA		
23–16	QIBA	IF_TP	
15–08	IF_TP		
07–00	IF_TP		Reserved

IIF_TP Description

Name	Type	Reset By	Reset State	Function
QIBA [31:20]	R	G_RST	0	QBus I_2O Base Address (specified in I2O_CS)
IF_TP [19:2]	R/W	G_RST	0	Inbound Free_List Top Pointer This pointer gives the address offset for the Inbound Free-List Top Pointer. This register is initialized and maintained by the QBus Host.

© 2019 Renesas Electronics Corporation

Table 102: I_2O Inbound Free_List Bottom Pointer Register

Register Name: IIF_BP	Register Offset: 208

Bits	Function		
31–24	QIBA		
23–16	QIBA	IF_BP	
15–08	IF_BP		
07–00	IF_BP		Reserved

IIF_BP Description

Name	Type	Reset By	Reset State	Function
QIBA [31:20]	R	G_RST	0	QBus I_2O Base Address (specified in I2O_CS)
IF_BP [19:2]	R/W	G_RST	0	Inbound Free_List Bottom Pointer This pointer gives the address offset for the Inbound Free-List Bottom Pointer. This register is initialized by the QBus Host, but is maintained by QSpan II and is incremented by four (modulo boundary of FIFO_SIZE).

© 2019 Renesas Electronics Corporation

Table 103: I_2O Inbound Post_List Top Pointer Register

Register Name: IIP_TP	Register Offset: 20C

Bits	Function		
31–24	QIBA		
23–16	QIBA	IP_TP	
15–08	IP_TP		
07–00	IP_TP		Reserved

IIP_TP Description

Name	Type	Reset By	Reset State	Function
QIBA [31:20]	R	G_RST	0	QBus I_2O Base Address (specified in I2O_CS)
IP_TP [19:2]	R/W	G_RST	0	Inbound Post_List Top Pointer This pointer gives the address offset for the Inbound Post-List Top Pointer. This register is initialized by the QBus Host, but is maintained by QSpan II and is incremented by four (modulo boundary of FIFO_SIZE).

© 2019 Renesas Electronics Corporation

Table 104: I_2O Inbound Post_List Bottom Pointer Register

Register Name: IIP_BP	Register Offset: 210

Bits	Function		
31–24	QIBA		
23–16	QIBA	IP_BP	
15–08	IP_BP		
07–00	IP_BP		Reserved

IIP_BP Description

Name	Type	Reset By	Reset State	Function
QIBA [31:20]	R	G_RST	0	QBus I_2O Base Address (specified in I2O_CS)
IP_BP [19:2]	R/W	G_RST	0	Inbound Post_List Bottom Pointer This pointer gives the address offset for the Inbound Post-List Bottom Pointer. This register is initialized and maintained by the QBus Host.

© 2019 Renesas Electronics Corporation

Table 105: I_2O Outbound Free_List Top Pointer Register

Register Name: IOF_TP	Register Offset: 214

Bits	Function		
31–24	QIBA		
23–16	QIBA	OF_TP	
15–08	OF_TP		
07–00	OF_TP		Reserved

IOF_TP Description

Name	Type	Reset By	Reset State	Function
QIBA [31:20]	R	G_RST	0	QBus I_2O Base Address (specified in I2O_CS)
OF_TP [19:2]	R/W	G_RST	0	Outbound Free_List Top Pointer This pointer gives the address offset for the Outbound Free-List Top Pointer. This register is initialized by the QBus Host, but is maintained by the QSpan II and is incremented by four (modulo boundary of FIFO_SIZE).

© 2019 Renesas Electronics Corporation

Table 106: I_2O Outbound Free_List Bottom Pointer Register

Register Name: IOF_BP	Register Offset: 218

Bits	Function	
31–24	QIBA	
23–16	QIBA	OF_BP
15–08	OF_BP	
07–00	OF_BP	Reserved

IOF_BP Description

Name	Type	Reset By	Reset State	Function
QIBA [31:20]	R	G_RST	0	QBus I_2O Base Address (specified in I2O_CS)
OF_BP [19:2]	R/W	G_RST	0	Outbound Free_List Bottom Pointer This pointer gives the address offset for the Outbound Free-List Bottom Pointer. This register is initialized and maintained by the QBus Host.

© 2019 Renesas Electronics Corporation

Table 107: I_2O Outbound Post_List Top Pointer Register

Register Name: IOP_TP	Register Offset: 21C

Bits	Function	
31–24	QIBA	
23–16	QIBA	OP_TP
15–08	OP_TP	
07–00	OP_TP	Reserved

IOP_TP Description

Name	Type	Reset By	Reset State	Function
QIBA [31:20]	R	G_RST	0	QBus I_2O Base Address (specified in I2O_CS)
OP_TP [19:2]	R/W	G_RST	0	Outbound Post_List Top Pointer This pointer gives the address offset for the Outbound Post-List Bottom Pointer. This register is initialized and maintained by the QBus Host.

© 2019 Renesas Electronics Corporation

Table 108: I_2O Outbound Post_List Bottom Pointer Register

Register Name: IOP_BP	Register Offset: 220

Bits	Function	
31–24	QIBA	
23–16	QIBA	OP_BP
15–08	OP_BP	
07–00	OP_BP	Reserved

IOP_BP Description

Name	Type	Reset By	Reset State	Function
QIBA [31:20]	R	G_RST	0	QBus I_2O Base Address (specified in I2O_CS)
OP_BP [19:2]	R/W	G_RST	0	Outbound Post_List Bottom Pointer This pointer gives the address offset for the Outbound Post-List Bottom Pointer. This register is initialized by the QBus Host, but is maintained by QSpan II and is incremented by four (modulo boundary of FIFO_SIZE).

© 2019 Renesas Electronics Corporation

Table 109: IDMA Control and Status Register

Register Name: IDMA/DMA_CS	Register Offset: 400

Bits	Function							
31–24	GO	IRST_REQ	Reserved					
23–16	ACT	IRST	DONE	IPE	IQE	CMD	Reserved	
15–08	IWM [3:0]				TC[3:0]			
07–00	TC_EN	CHAIN	DMA	DIR	IMODE	QTERM	STERM	PORT16

IDMA/DMA_CS Description

Name	Type	Reset By	Reset State	Function
GO	W/Read 0 Always	G_RST	0	IDMA/DMA Go 0 = No effect 1 = Enable IDMA/DMA transfers
IRST_REQ	W/Read 0 Always	G_RST	0	IDMA/DMA Reset Request 0 = No effect 1 = Request reset of IDMA/DMA control
ACT	R	G_RST	0	IDMA/DMA Active Status 0 = No IDMA/DMA transfer is active, 1 = IDMA/DMA transfer in progress
IRST	R/Write 1 to Clear	G_RST	0	IDMA/DMA Reset Status 0 = Not reset 1 = Reset
DONE	R/Write 1 to Clear	G_RST	0	IDMA/DMA Done Status 0 = Not done 1 = Done
IPE	R/Write 1 to Clear	G_RST	0	IDMA/DMA PCI Bus Error Status 0 = No error occurred 1 = Error occurred on the PCI bus during IDMA/DMA transfer
IQE	R/Write 1 to Clear	G_RST	0	IDMA/DMA QBus Error Status 0 = No error occurred 1 = Error occurred on the QBus during IDMA/DMA transfer
CMD	R/W	G_RST	0	PCI Command Option for IDMA/DMA PCI Transaction 0 = PCI Memory Write or Memory Read 1 = PCI Memory Write Invalidate or Memory Read Line

© 2019 Renesas Electronics Corporation

IDMA/DMA_CS Description *(Continued)*

Name	Type	Reset By	Reset State	Function
IWM [3:0]	R/W	G_RST	0	Programmable I-FIFO Watermark (for IDMA transfers) 0000 = use the value programmed into the CLINE[1:0] field of the PCI_MISC0 register x = when 16x bytes have been queued in the I-FIFO, the IDMA channel will request the PCI bus. Watermark can be set to a maximum of 240 bytes.
TC [3:0]	R/W	G_RST	0	Programmable TC Encoding with MPC860 IDMA Program to the value expected on the QSpan II's TC[3:0] lines during an IDMA transfer. The intent of this field is to allow users to use the TC lines to encode an IDMA transaction for the QSpan II (add a qualifier for SDACK assertion).
TC_EN	R/W	G_RST	0	TC Encoding Enable (IDMA transfers only) 0 = QSpan II does not decode TC[3:0] for IDMA accesses 1 = QSpan II decodes TC[3:0] for IDMA accesses
CHAIN	R/W	G_RST	0	DMA chaining 0 = Direct Mode DMA 1 = Linked List Mode DMA
DMA	R/W	G_RST	0	DMA 0 = QSpan II does an IDMA transfer 1 = QSpan II does a DMA transfer
DIR	R/W	G_RST	0	Direction 0 = Transfer from PCI Bus to QBus 1 = Transfer from QBus to PCI bus
IMODE	R/W	G_RST	0	IDMA Mode 0 = IDMA transfer is MC68360 1 = IDMA transfer is MPC860
QTERM	R/W	G_RST	0	Termination Mode 0 = QSpan II uses normal termination during MC68360 dual address IDMA transfers 1 = QSpan II uses fast termination during MC68360 dual address IDMA transfers
STERM	R/W	G_RST	0	Slave Termination Mode 0 = External slave uses normal termination mode during MC68360 single address IDMA transfers 1 = External slave uses fast termination during MC68360 single address IDMA transfers
PORT16	R/W	G_RST	0	QBus Port 16 0 = Source/destination on QBus is a 32-bit port 1 = Source/destination on QBus is a 16-bit port

© 2019 Renesas Electronics Corporation

The programmable I-FIFO Watermark (IWM[3:0]) must be programmed with a value less than or equal to the value programmed in the IDMA Transfer Count Register.

The QTERM bit is important when the QSpan II is operating as an MC68360 IDMA peripheral device during dual address IDMA transfers. During all other conditions this bit does not affect the QSpan II's operation.

The STERM bit is important when the QSpan II is operating as an MC68360 IDMA peripheral device during single address IDMA transfers. During all other conditions this bit does not affect the QSpan II's operation.

The IDMA/DMA Channel can be reset from either bus while it is in progress by writing 1 to the IRST_REQ bit (see "IDMA Errors, Resets, and Interrupts" on page 89). If the ACT bit is 0, then setting IRST_REQ to 1 has no effect.

The DONE bit is set by the QSpan II if its transfer count expires in the IDMA/DMA Transfer Count register, or the DONE_ signal is asserted by the MC68360 during IDMA transfers. Under either condition the QSpan II's IDMA controller will return to the idle state, which is indicated by the ACT bit.

The IRST, DONE, IPE and IQE events can be mapped to the interrupt pins on either bus using the QSpan II's Interrupt Control Registers (see Table 120 on page 263). See Chapter 5: "The IDMA Channel" on page 83 for more information.

© 2019 Renesas Electronics Corporation

Table 110: IDMA/DMA PCI Address Register

Register Name: IDMA/DMA_PADD	Register Offset: 404

Bits	Function		
31–24	ADDR		
23–16	ADDR		
15–08	ADDR		
07–00	ADDR	0	0

IDMA/DMA_PADD Description

Name	Type	Reset By	Reset State	Function
ADDR[31:2]	R/W	G_RST	0	PCI Bus Address for IDMA/DMA transfers

The ADDR field must be programmed with the absolute PCI address for an IDMA/DMA transaction. This address is aligned to a 4-byte boundary. An IDMA/DMA transfer wraps-around at the A24 boundary. If an IDMA/DMA transfer is required to cross an A24 boundary, it must be programmed as two separate transactions. This field is incremented by the QSpan II during a transfer. Progress of the IDMA/DMA transfer on the PCI bus can be monitored by reading the IDMA/DMA_CNT register (see Table 111 on page 250).

This register can be programmed from either bus, or by the DMA controller when it loads a command packet from QBus or PCI memory.

© 2019 Renesas Electronics Corporation

Table 111: IDMA/DMA Transfer Count Register

Register Name: IDMA/DMA_CNT	Register Offset: 408

Bits	Function		
31–24	Reserved		
23–16	CNT		
15–08	CNT		
07–00	CNT	0	0

IDMA/DMA_CNT Description[a]

Name	Type	Reset By	Reset State	Function
CNT[23:2]	R/W	G_RST	0	IDMA/DMA Transfer Count Number of Bytes to Transfer (Max = 2^{22} * 4 bytes)

a. The IDMA/DMA_CNT should not be programmed to be less than the specified value in the watermark field, IWM.

CNT[23:2] indicates the number of bytes left to transfer in an IDMA/DMA transaction (see Table 111 on page 250). The QSpan II decreases this transfer counter by four with every 32-bit transfer on the PCI bus. (The IDMA/DMA Channel on the PCI Interface transfers 32-bit data.) The amount of data that can be transferred within an IDMA/DMA transaction is 16 Mbytes (for example, 2^{22} 32-bit transfers).

The CNT[23:2] field must be programmed with a minimum value of 0x000010 (corresponding to 16 bytes) otherwise the IDMA/DMA channel will not start when the GO bit is set. The CNT field must initially be programmed with the same value as the processor's IDMA's Byte Count register when IDMA transfers are initiated.

This register can be programmed from either bus, or is programmed by the DMA controller when it loads a command packet from QBus or PCI memory. The command packet only contains CNT[19:2], making the maximum Linked List transfer size 1 Mbyte.

© 2019 Renesas Electronics Corporation

Table 112: DMA QBus Address Register

Register Name: DMA_QADD	Register Offset: 40C

Bits	Function		
31–24	Q_ADDR		
23–16	Q_ADDR		
15–08	Q_ADDR		
07–00	Q_ADDR	0	0

DMA_QADD Description

Name	Type	Reset By	Reset State	Function
Q_ADDR[31:2]	R/W	G_RST	0	QBus Address for DMA transfers

The Q_ADDR[31:2] field must be programmed with the absolute QBus address for the DMA transaction. This address is aligned to a 4-byte boundary. A DMA transfer wraps-around at an A24 boundary. If a DMA transfer is required to cross an A24 boundary, it must be programmed as two separate transactions. This field is not incremented by the QSpan II during a transfer: progress of the DMA transfer on the PCI bus can be monitored by reading the IDMA/DMA_CNT register (see Table 111 on page 250).

This register can be programmed from either bus, or is programmed by the DMA controller when it loads a command packet from QBus or PCI memory.

© 2019 Renesas Electronics Corporation

Table 113: DMA Control and Status Register

Register Name: DMA_CS	Register Offset: 410

Bits	Function					
31–24	TC			DIR	DSIZE	INVEND
23–16	IWM			Reserved	Q_OFF	
15–08	BURST_4	BRSTEN	Reserved		MDBS	CP_LOC
07–00	STOP	STOP_ STAT	Reserved			

DMA_CS Description

Name	Type	Reset By	Reset State	Function
TC[3:0]	R/W	G_RST	0	QBus Transaction Code (for DMA transfers) User Defined
DIR	R	G_RST	0	DMA Direction 0 = Transfer from PCI Bus to QBus 1 = Transfer from QBus to PCI bus (read-only copy of DIR bit in IDMA/DMA_CS)
DSIZE[1:0]	R/W	G_RST	0	QBus Destination Port Size 00 = 32-bit 01 = 8-bit 10 = 16-bit 11 = reserved
INVEND	R/W	G_RST	0	Invert Endian-ness from QB_BOC Setting in MISC_CTL 0 = Use QB_BOC setting 1 = Invert QB_BOC setting
IWM[3:0]	R/W	G_RST	0	Programmable I-FIFO Watermark 0000 = use the value programmed into the CLINE[1:0] field of the PCI_MISC0 register x = when 16x bytes have been queued in the I-FIFO, the DMA channel will request the PCI bus. Watermark can be set to a maximum of 128 bytes (1000) others = Reserved

© 2019 Renesas Electronics Corporation

DMA_CS Description *(Continued)*

Name	Type	Reset By	Reset State	Function
Q_OFF	R/W	G_RST	0	DMA QBus Off Counter 000b = 0 001b = 64 010b = 128 011b = 256 100b = 512 101b = 1024 others = Reserved The DMA controller will not request the QBus until the programmed number of QCLKs expires.
BURST_4	R/W	G_RST	0	QBus Burst Four Dataphases 0 = QSpan II will generate partial QBus burst (2 or 3 dataphases) 1 = QSpan II will only generate QBus burst with 4 dataphases
BRSTEN	R/W	G_RST	0	QBus Burst Enable 0 = Disable 1 = Enable
MDBS	R/W	G_RST	0	Maximum DMA Burst Size on QBus 0 = 256 Bytes 1 = 64 Bytes
CP_LOC	R/W	G_RST	0	Command Packet Location 0 = PCI Bus 1 = QBus
STOP	R/W	G_RST	0	DMA Stop 0 = Resume DMA transfer 1 = Stop DMA transfer
STOP_STAT	R	G_RST	0	DMA Stop Status 0 = DMA transfer is not stopped 1 = DMA transfer is stopped

The generation of burst cycles is supported when the QSpan II is powered up in MPC860 Master mode. The DMA QBus OFF counter is activated when a DMA transfer crosses a 256-byte address boundary on the QBus. For example, the counter is active after each 256-byte transfer on the QBus when MDBS = 0, otherwise 64-byte boundary is used.

A DMA transfer in progress can be stopped by setting the STOP bit. The DMA transfer is stopped once any active transfer is completed. The STOP_STAT is set when the DMA is stopped. To restart the DMA, a 0 must be written to the STOP bit.

© 2019 Renesas Electronics Corporation

This register can be programmed from either bus. The upper 12 bits [31:20] can also be loaded from a command packet when in Linked List mode.

The CP_LOC indicates the location of the command packet in either QBus or PCI Bus memory. All the command packets in a linked list must be in either PCI or QBus memory, and not both.

© 2019 Renesas Electronics Corporation

Table 114: DMA Command Packet Pointer Register

Register Name: DMA_CPP	Register Offset: 414

Bits	Function	
31–24	CPP	
23–16	CPP	
15–08	CPP	
07–00	CPP	Reserved

DMA_CPP Description

Name	Type	Reset By	Reset State	Function
CPP[31:4]	R/W	G_RST	0	DMA Command Packet Pointer

This register contains the pointer to the next command packet. Initially it is programmed to the starting packet of the Linked List, and is updated with the address to the next command packet when a command packet is loaded from memory. The packets must be aligned to a 16-byte address.

© 2019 Renesas Electronics Corporation

Table 115: Configuration Address Register

Register Name: CON_ADD	Register Offset: 500

Bits	Function							
31–24	0	0	0	0	0	0	0	0
23–16	BUS_NUM							
15–08	0	DEV_NUM				FUNC_NUM		
07–00	REG_NUM						0	TYPE

CON_ADD Description

Name	Type	Reset By	Reset State	Function
BUS_NUM [7:0]	R/W	G_RST	0	Bus Number
DEV_NUM [3:0]	R/W	G_RST	0	Device Number
FUNC_NUM [2:0]	R/W	G_RST	0	Function Number
REG_NUM [5:0]	R/W	G_RST	0	Register Number
TYPE	R/W	G_RST	0	Configuration Cycle Type 0 = Type 0 1 = Type 1

An access to the PCI Configuration Data Register (see Table 117 on page 258) from the QBus Interface performs a corresponding Configuration cycle on the PCI bus. The type of configuration cycle generated by the QSpan II is a function of the TYPE bit.

If the TYPE bit set to 1, an access of the PCI Configuration Data register from the QBus interface performs a corresponding Configuration Type 1 cycle on the PCI bus. During the address phase of the Configuration Type 1 cycle on the PCI bus, the PCI address lines carry the values encoded in the Configuration Address Register (AD[31:0] = CON_ADDR[31:0]).

The QSpan II cannot perform a Type 0 Configuration cycle to a PCI target that has its IDSEL input connected to one of the AD[15..11] signals — bit 15 of the CON_ADD register is hardcoded as 0. Therefore, for host bridging applications the hardware designer must choose to drive each PCI target's IDSEL input from one of the AD[31..16] signals.

© 2019 Renesas Electronics Corporation

If the TYPE bit set to 0, an access of the PCI Configuration Data register from the QBus interface performs a corresponding Configuration Type 0 cycle on the PCI bus. Programming the Device Number causes one of the upper address lines, AD[31:16], to be asserted during the address phase of the Configuration Type 0 cycle. (Table 115 shows which PCI address line is asserted as a function of the DEV_NUM[3:0] field.) The remaining address lines during the address phase of the Configuration cycle are controlled by the Function Number and Register Number:

- AD[15:11] = 00000
- AD[10:8] = FUNC_NUM[2:0]
- AD[7:2] = REG_NUM[5:0]
- AD[1:0] = 00

Table 116: PCI AD[31:16] lines asserted as a function of DEV_NUM field

DEV_NUM[3:0]	AD[31:16]
0000	0000 0000 0000 0001
0001	0000 0000 0000 0010
0010	0000 0000 0000 0100
0011	0000 0000 0000 1000
0100	0000 0000 0001 0000
0101	0000 0000 0010 0000
0110	0000 0000 0100 0000
0111	0000 0000 1000 0000
1000	0000 0001 0000 0000
1001	0000 0010 0000 0000
1010	0000 0100 0000 0000
1011	0000 1000 0000 0000
1100	0001 0000 0000 0000
1101	0010 0000 0000 0000
1110	0100 0000 0000 0000
1111	1000 0000 0000 0000

© 2019 Renesas Electronics Corporation

Table 117: Configuration Data Register

Register Name: CON_DATA	Register Offset: 504

Bits	Function
31–24	CDATA
23–16	CDATA
15–08	CDATA
07–00	CDATA

CON_DATA Description

Name	Type	Reset By	Reset State	Function
CDATA[31:0]	R/W	G_RST	0	Configuration Data

A write to the PCI Configuration Data register from the PCI bus has no effect. A read from the PCI bus always returns all zeros. A write to the Configuration Data register from the QBus causes a Configuration Write Cycle to be generated on the PCI as defined by the Configuration Address register (see Table 115). A read of this register from the QBus causes a Configuration Read Cycle to be generated on the PCI bus. The PCI bus Configuration cycles generated by accessing the Configuration Data register are processed as delayed transfers.

The QSpan II does not perform byte swapping of data in the Register Channel regardless of whether the QBus is configured as big or little endian. Bit 31 in the register is bit 31 on the QBus regardless of the QB_BOC bit in the MISC_CTL register (see Table 127 on page 274). Therefore, software on the QBus may need to swap the data when performing configuration cycles.

The QSpan II generates a bus error upon a register access to the CON_DATA register if the bus master (BM) bit in the PCI_CS register is not set.

© 2019 Renesas Electronics Corporation

Table 118: IACK Cycle Generator Register

Register Name: IACK_GEN	Register Offset: 508

Bits	Function
31–24	IACK_VEC
23–16	IACK_VEC
15–08	IACK_VEC
07–00	IACK_VEC

IACK_GEN Description

Name	Type	Reset By	Reset State	Function
IACK_VEC [31:0]	R	GEN_RST	0	PCI IACK Cycle Vector

This register generates an Interrupt Acknowledge cycle originating on the QBus. Reading this register from the QBus causes an IACK cycle to be generated on the PCI bus. The byte lanes enabled on the PCI bus are determined by SIZ[1:0] and A[1:0] of the QBus read. The address on the QBus used to access the IACK_GEN register is passed to the PCI bus during the PCI IACK cycle. Address information, however, is ignored during PCI IACK cycles, so this has no effect.

Reads from this register act as delayed transfers. This means that the QBus master is retried until the read data is latched from the PCI target. When the IACK cycle completes on the PCI bus, the IACK_VEC[31:0] field is returned as read data when the QBus master returns after the retry.

Writing to this register from the QBus or PCI bus has no effect. Reads from the PCI bus return all zeros.

The QSpan II does not perform byte swapping of data in the Register Channel regardless of whether the QBus is configured as big or little endian. Bit 31 in the register is bit 31 on the QBus regardless of the QB_BOC bit in the MISC_CTL register (see Table 127 on page 274). Therefore, software on the QBus may need to swap the data when performing IACK cycles.

QSpan II generates a bus error upon register access to the IACK_GEN register if the bus master (BM) bit in the PCI_CS register is not set.

© 2019 Renesas Electronics Corporation

Table 119: Interrupt Status Register

Register Name: INT_STAT	Register Offset: 600

Bits	Function							
31–24	PEL_IS	QEL_IS	MDPED_IS	PCSR_IS	IQE_IS	IPE_IS	IRST_IS	DONE_IS
23–16	INT_IS	PERR_IS	SERR_IS	QINT_IS	MB3_IS	MB2_IS	MB1_IS	MB0_IS
15–08	QDPE_S	PSC_IS	OPNE_S	IPN_IS	IFE_S	OFE_S	IPF_S	OFF_S
07–00	Reserved				SI3_IS	SI2_IS	SI1_IS	SI0_IS

INT_STAT Description

Name	Type	Reset By	Reset State	Function
PEL_IS	R/Write 1 to Clear	G_RST	0	PCI Bus Error Log Interrupt Status
QEL_IS	R/Write 1 to Clear	G_RST	0	QBus Error Log Interrupt Status
MDPED_IS	R/Write 1 to Clear	G_RST	0	PCI Master Data Parity Detected Interrupt Status
PCSR_IS	R/Write 1 to Clear	G_RST	0	PCI_CS Register Interrupt Status
IQE_IS	R/Write 1 to Clear	G_RST	0	IDMA/DMA QBus Error Interrupt Status
IPE_IS	R/Write 1 to Clear	G_RST	0	IDMA/DMA PCI Error Interrupt Status
IRST_IS	R/Write 1 to Clear	G_RST	0	IDMA/DMA Reset Interrupt Status
DONE_IS	R/Write 1 to Clear	G_RST	0	IDMA/DMA Done Interrupt Status
INT_IS	R/Write 1 to Clear	G_RST	0	Status of PCI interrupt input to QBus interrupt output
PERR_IS	R/Write 1 to Clear	G_RST	0	Status of PCI bus PERR# input to QBus interrupt output
SERR_IS	R/Write 1 to Clear	G_RST	0	Status of PCI bus SERR# input to QBus interrupt output
QINT_IS	R/Write 1 to Clear	G_RST	0	Status of QBus interrupt input to PCI interrupt output
MB3_IS	R/Write 1 to Clear	G_RST	0	MailBox3 Interrupt Status

© 2019 Renesas Electronics Corporation

INT_STAT Description *(Continued)*

Name	Type	Reset By	Reset State	Function
MB2_IS	R/Write 1 to Clear	G_RST	0	MailBox2 Interrupt Status
MB1_IS	R/Write 1 to Clear	G_RST	0	MailBox1 Interrupt Status
MB0_IS	R/Write 1 to Clear	G_RST	0	MailBox0 Interrupt Status
QDPE_S	R/Write 1 to Clear	G_RST	0	QBus Data Parity Error Status
PSC_IS	R/Write 1 to Clear	G_RST	0	Power State Changed Interrupt Status
OPNE_S	R	G_RST	0	Outbound Post_List Not Empty Status This bit is set when the Outbound Post_List is not empty.
IPN_IS	R/Write 1 to Clear	G_RST	0	Inbound Post_List New Entry Interrupt Status This bit is set when a new entry is posted into the Inbound Post_List.
IFE_S	R	G_RST	1	Inbound Free_List Empty Status This bit is set when the Inbound Free_List is empty.
OFE_S	R	G_RST	1	Outbound Free_List Empty Status This bit is set when the Outbound Free_List is empty.
IPF_S	R	G_RST	0	Inbound Post_List Full Status This bit is set when the Inbound Post_List is full.
OFF_S	R	G_RST	0	Outbound Free_List Full Status This bit is set when the Outbound Free_List is full.
SI3_IS	R/Write 1 to Clear	G_RST	0	Software Interrupt 3 Status
SI2_IS	R/Write 1 to Clear	G_RST	0	Software Interrupt 2 Status
SI1_IS	R/Write 1 to Clear	G_RST	0	Software Interrupt 1 Status
SI0_IS	R/Write 1 to Clear	G_RST	0	Software Interrupt 0 Status

Interrupt status bits are set upon the assertion of the interrupt condition. Each interrupt status bit in the Interrupt Status register will remain set until a 1 is written to it. Clearing of the interrupt status bit will not clear the source status bit that may have caused the interrupt to be asserted. As part of the interrupt handling routine, a separate register transaction to the corresponding status register must occur.

© 2019 Renesas Electronics Corporation

For instance, the MDPED_IS bit is set — if it is enabled — when the MD_PED bit in the PCI Configuration Control and Status Register is set. To clear this interrupt, clear both status bits.

I_2O related status bits (OPNE_S, IFE_S, OFE_S, IPF_S, OFF_S) are set regardless of the corresponding interrupt enable bit in INT_CTL register. Only IPN_IS status bit is set when the interrupt enable bit (IPN_EN in INT_CTL) is set and a new entry (MFA) is posted into the Inbound Post_List FIFO.

© 2019 Renesas Electronics Corporation

Table 120: Interrupt Control Register

Register Name: INT_CTL	Register Offset: 604

Bits	Function							
31–24	PEL_EN	QEL_EN	MDPED_EN	PCSR_EN	IQE_EN	IPE_EN	IRST_EN	DONE_EN
23–16	INT_EN	PERR_EN	SERR_EN	QINT_EN	MB3_EN	MB2_EN	MB1_EN	MB0_EN
15–08	QDPE_EN	PSC_EN	OPNE_EN	IPN_EN	IFE_EN	OFE_EN	IPF_EN	OFF_EN
07–00	Reserved						SI1	SI0

INT_CTL Description

Name	Type	Reset By	Reset State	Function
PEL_EN	R/W	G_RST	0	PCI Bus Error Log Interrupt Enable 0 = Disable mapping of PCI error log interrupt 1 = Enable mapping of interrupt
QEL_EN	R/W	G_RST	0	QBus Error Log Interrupt Enable 0 = Disable mapping of QBus error log interrupt 1 = Enable mapping of interrupt
MDPED_EN	R/W	G_RST	0	PCI Master Data Parity Detected Interrupt Enable 0 = Disable mapping of Master Data Parity Detected interrupt 1 = Enable mapping of interrupt
PCSR_EN	R/W	G_RST	0	PCI_CS Register status bit set Interrupt Enable 0 = Disable mapping of PCI_CS Register status bit set interrupt 1 = Enable mapping of interrupt
IQE_EN	R/W	G_RST	0	IDMA/DMA QBus Error Interrupt Enable 0 = Disable mapping of IDMA QBus error interrupt 1 = Enable mapping of interrupt
IPE_EN	R/W	G_RST	0	IDMA/DMA PCI Error Interrupt Enable 0 = Disable mapping of IDMA PCI error interrupt 1 = Enable mapping of interrupt
IRST_EN	R/W	G_RST	0	IDMA/DMA Reset Interrupt Enable 0 = Disable mapping of IDMA reset interrupt 1 = Enable mapping of IDMA reset interrupt
DONE_EN	R/W	G_RST	0	IDMA/DMA Done Interrupt Enable 0 = Disable mapping of IDMA done interrupt 1 = Enable mapping of interrupt

© 2019 Renesas Electronics Corporation

INT_CTL Description *(Continued)*

Name	Type	Reset By	Reset State	Function
INT_EN	R/W	G_RST	0	Map PCI bus Interrupt Input to QBus Interrupt Output Enable 0 = Disable mapping 1 = Enable mapping of interrupt
PERR_EN	R/W	G_RST	0	Map Parity Error on PCI bus to QBus Interrupt Output Enable 0 = Disable mapping 1 = Enable mapping of interrupt
SERR_EN	R/W	G_RST	0	Map SERR# Input to QBus Interrupt Output Enable 0 = Disable mapping 1 = Enable mapping of interrupt
QINT_EN	R/W	G_RST	0	Map QBus Interrupt Input to PCI Bus Interrupt Output Enable 0 = Disable mapping 1 = Enable mapping of interrupt
MB3_EN	R/W	G_RST	0	MailBox3 Interrupt Enable 0 = Disable mapping 1 = Enable mapping of interrupt
MB2_EN	R/W	G_RST	0	MailBox2 Interrupt Enable 0 = Disable mapping 1 = Enable mapping of interrupt
MB1_EN	R/W	G_RST	0	MailBox1 Interrupt Enable 0 = Disable mapping 1 = Enable mapping of interrupt
MB0_EN	R/W	G_RST	0	MailBox0 Interrupt Enable 0 = Disable mapping 1 = Enable mapping of interrupt
QDPE_EN	R/W	G_RST	0	QBus Data Parity Error Interrupt Enable 0 = Disable mapping 1 = Enable mapping of interrupt
PSC_EN	R/W	G_RST	0	Power State Changed Interrupt Enable 0 = Disable mapping 1 = Enable mapping of interrupt
OPNE_EN	R	G_RST	0	Outbound Post_List Not Empty Interrupt Enable (read-only copy based on OP_IM in I2O_OPIM register) 0 = Disable interrupt 1 = Enable interrupt when Outbound Post List is not empty

© 2019 Renesas Electronics Corporation

INT_CTL Description *(Continued)*

Name	Type	Reset By	Reset State	Function
IPN_EN	R/W	G_RST	0	Inbound Post_List New Entry Interrupt Enable 0 = Disable interrupt 1 = Enable interrupt when a new entry is posted into Inbound Post_List
IFE_EN	R/W	G_RST	0	Inbound Free_List Empty Interrupt Enable 0 = Disable interrupt 1 = Enable interrupt when Inbound Free_List Empty Status is set
OFE_EN	R/W	G_RST	0	Outbound Free_List Empty Interrupt Enable 0 = Disable interrupt 1 = Enable interrupt when Outbound Free_List Empty Status is set
IPF_EN	R/W	G_RST	0	Inbound Post_List Full Interrupt Enable 0 = Disable interrupt 1 = Enable interrupt when Inbound Post_List Full Status is set
OFF_EN	R/W	G_RST	0	Outbound Free_List Full Interrupt Enable 0 = Disable interrupt 1 = Enable interrupt when Outbound Free_List Full Status is set
SI1	W/Read 0 Always	G_RST	0	Software Interrupt 1 0 = No effect 1 = Sets SI1_IS status bit
SI0	W/Read 0 Always	G_RST	0	Software Interrupt 0 0 = No effect 1 = Sets SI0_IS status bit

© 2019 Renesas Electronics Corporation

Table 121: Interrupt Direction Register

Register Name: INT_DIR	Register Offset: 608

Bits	Function							
31–24	PEL_DIR	QEL_DIR	MDPED_DIR	PCSR_DIR	IQE_DIR	IPE_DIR	IRST_DIR	DONE_DIR
23–16	INT_DIR	PERR_DIR	SERR_DIR	QINT_DIR	MB3_DIR	MB2_DIR	MB1_DIR	MB0_DIR
15–08	QDPE_DIR	PSC_DIR	OPNE_DIR	IPN_DIR	IFE_DIR	OFE_DIR	IPF_DIR	OFF_DIR
07–00	Reserved				SI3_DIR	SI2_DIR	SI1_DIR	SI0_DIR

INT_DIR Description

Name	Type	Reset By	Reset State	Function
PEL_DIR	R/W	G_RST	0	PCI Error Log Interrupt Direction 0 = Map PCI error log interrupt to the QBus 1 = Map interrupt to the PCI bus
QEL_DIR	R/W	G_RST	0	QBus Error Log Interrupt Direction 0 = Map QBus error log interrupt to the QBus 1 = Map interrupt to the PCI bus
MDPED_DIR	R/W	G_RST	0	PCI Master Data Parity Detected Interrupt Direction 0 = Map Master Data Parity Detected interrupt to the QBus 1 = Map interrupt to the PCI bus
PCSR_DIR	R/W	G_RST	0	PCI_CS Register status bit set Interrupt Direction 0 = Map PCI_CS Register status bit set interrupt to the QBus 1 = Map interrupt to the PCI bus
IQE_DIR	R/W	G_RST	0	IDMA\DMA QBus Error Interrupt Direction 0 = Map IDMA\DMA QBus error interrupt to the QBus 1 = Map interrupt to the PCI bus
IPE_DIR	R/W	G_RST	0	IDMA\DMA PCI Error Interrupt Direction 0 = Map IDMA\DMA PCI error interrupt to the QBus 1 = Map interrupt to the PCI bus
IRST_DIR	R/W	G_RST	0	IDMA\DMA Reset Interrupt Direction 0 = Map IDMA\DMA reset interrupt to the QBus 1 = Map interrupt to the PCI bus
DONE_DIR	R/W	G_RST	0	IDMA\DMA Done Interrupt Direction 0 = Map IDMA done interrupt to the QBus 1 = Map IDMA done interrupt to the PCI bus
INT_DIR	R	G_RST	0	PCI Interrupt mapping Direction Always mapped to QBus.
PERR_DIR	R	G_RST	0	PCI Parity Error mapping Direction Always mapped to the QBus.

© 2019 Renesas Electronics Corporation

INT_DIR Description *(Continued)*

Name	Type	Reset By	Reset State	Function
SERR_DIR	R	G_RST	0	PCI SERR# mapping Direction Always mapped to QBus.
QINT_DIR	R	G_RST	1	QBus Interrupt mapping Direction Always mapped to PCI Bus.
MB3_DIR	R/W	G_RST	0	MailBox3 Interrupt Direction 0 = Map MailBox3 interrupt to the QBus 1 = Map MailBox3 interrupt to the PCI bus
MB2_DIR	R/W	G_RST	0	MailBox2 Interrupt Direction 0 = Map MailBox2 interrupt to the QBus, 1 = Map MailBox2 interrupt to the PCI bus
MB1_DIR	R/W	G_RST	0	MailBox1 Interrupt Direction 0 = Map MailBox1 interrupt to the QBus 1 = Map MailBox1 interrupt to the PCI bus
MB0_DIR	R/W	G_RST	0	MailBox0 Interrupt Direction 0 = Map MailBox0 interrupt to the QBus, 1 = Map MailBox0 interrupt to the PCI bus
QDPE_DIR	R/W	G_RST	0	QBus Data Parity Error Interrupt Direction 0 = Map QBus Data Parity Error interrupt to the QBus, 1 = Map interrupt to the PCI bus
PSC_DIR	R	G_RST	0	Power State Changed Interrupt Direction Always mapped to QBus.
OPNE_DIR	R	G_RST	1	Outbound Post_List Not Empty Interrupt Direction Always mapped to PCI Bus.
IPN_DIR	R	G_RST	0	Inbound Post_List New Entry Interrupt Direction Always mapped to QBus.
IFE_DIR	R/W	G_RST	0	Inbound Free_List Empty Interrupt Direction 0 = Map Inbound Free_List Empty interrupt to QBus 1 = Map interrupt to the PCI bus
OFE_DIR	R/W	G_RST	0	Outbound Free_List Empty Interrupt Direction 0 = Map Outbound Free_List Empty interrupt to QBus 1 = Map interrupt to the PCI bus
IPF_DIR	R/W	G_RST	0	Inbound Post_List Full Interrupt Direction 0 = Map Inbound Post_List Full interrupt to QBus 1 = Map interrupt to the PCI bus
OFF_DIR	R/W	G_RST	0	Outbound Free_List Full Interrupt Direction 0 = Map Outbound Free_List Full interrupt to QBus 1 = Map interrupt to the PCI bus

© 2019 Renesas Electronics Corporation

INT_DIR Description *(Continued)*

Name	Type	Reset By	Reset State	Function
SI3_DIR	R/W	G_RST	0	Software Interrupt 3 Direction 0 = Map software interrupt to the QBus 1 = Map interrupt to the PCI bus
SI2_DIR	R/W	G_RST	0	Software Interrupt 2 Direction 0 = Map software interrupt to the QBus 1 = Map interrupt to the PCI bus
SI1_DIR	R/W	G_RST	0	Software Interrupt 1 Direction 0 = Map software interrupt to the QBus 1 = Map interrupt to the PCI bus
SI0_DIR	R/W	G_RST	0	Software Interrupt 0 Direction 0 = Map software interrupt to the QBus 1 = Map interrupt to the PCI bus

In order for an interrupt to be mapped to either bus, it must also have its corresponding interrupt enable set in the Interrupt Control Register (see Table 120 on page 263).

© 2019 Renesas Electronics Corporation

Table 122: Interrupt Control Register 2

Register Name: INT_CTL2	Register Offset: 60C

Bits	Function			
31–24	Reserved			
23–16	Reserved			
15–08	Reserved			
07–00	Reserved	SI3	SI2	Reserved

INT_CTL2 Description

Name	Type	Reset By	Reset State	Function
SI3	W/Read 0 Always	G_RST	0	Software Interrupt 3 0 = No effect 1 = Sets SI3_IS status bit
SI2	W/Read 0 Always	G_RST	0	Software Interrupt 2 0 = No effect 1 = Sets SI2_IS status bit

© 2019 Renesas Electronics Corporation

Table 123: Mailbox 0 Register

Register Name: MBOX0	Register Offset: 700

Bits	Function
31–24	MB_DATA
23–16	MB_DATA
15–08	MB_DATA
07–00	MB_DATA

MBOX0 Description

Name	Type	Reset By	Reset State	Function
MB_DATA [31:0]	R/W	GEN_RST	0	MailBox Data

© 2019 Renesas Electronics Corporation

Table 124: Mailbox 1 Register

Register Name: MBOX1	Register Offset: 704

Bits	Function
31–24	MB_DATA
23–16	MB_DATA
15–08	MB_DATA
07–00	MB_DATA

MBOX1 Description

Name	Type	Reset By	Reset State	Function
MB_DATA [31:0]	R/W	GEN_RST	0	MailBox Data

© 2019 Renesas Electronics Corporation

Table 125: Mailbox 2 Register

Register Name: MBOX2	Register Offset: 708

Bits	Function
31–24	MB_DATA
23–16	MB_DATA
15–08	MB_DATA
07–00	MB_DATA

MBOX2 Description

Name	Type	Reset By	Reset State	Function
MB_DATA [31:0]	R/W	GEN_RST	0	MailBox Data

© 2019 Renesas Electronics Corporation

Table 126: Mailbox 3 Register

Register Name: MBOX3	Register Offset: 70C

Bits	Function
31–24	MB_DATA
23–16	MB_DATA
15–08	MB_DATA
07–00	MB_DATA

MBOX3 Description

Name	Type	Reset By	Reset State	Function
MB_DATA [31:0]	R/W	GEN_RST	0	MailBox Data

© 2019 Renesas Electronics Corporation

Table 127: Miscellaneous Control and Status Register

Register Name: MISC_CTL	Register Offset: 800

Bits	Function						
31–24	SW_RST	Reserved					
23–16	Reserved			S_BG	S_BB	0	QB_BOC
15–08	Reserved		MA_BE_D	Reserved		QFIFO_BLK8	QFIFO_MODE
07–00	PRCNT[5:0]					MSTSLV	

MISC_CTL Description

Name	Type	Reset By	Reset State	Function
SW_RST	R/W	G_RST	0	QBus Software Reset Control 0 = software reset not active 1 = software reset active
S_BG	R/W	G_RST	See below	Synchronous Bus Grant 0 = BG_ input is asynchronous to QCLK 1 = BG_ input is synchronous to QCLK
S_BB	R/W	G_RST	See below	Synchronous Bus Grant Acknowledge 0 = BG_ input is asynchronous to QCLK 1 = BG_ input is synchronous to QCLK
QB_BOC	R/W	G_RST	0	QBus Byte Ordering Control 0 = QBus uses Big-Endian byte ordering 1 = QBus uses PCI Little-Endian byte ordering
MA_BE_D[a]	R/W	G_RST	0	Master-Abort - Bus Error Mapping Disable Applies to delayed transfers. 0 = When QSpan II issues a PCI Master-Abort, it maps this termination to the QBus as a bus error (behaves in the same manner as previous QSpan designs) 1 = When QSpan II receives a PCI Master-Abort it maps this as a normal termination on the QBus. On writes, data is flushed from the channel, and on reads the QSpan II returns all ones. In order to comply with the *PCI 2.2 Specification*, the MA_BE_D bit should be set to 1 before any PCI configuration cycles are performed, if the QSpan II is being used as a host bridge.
QFIFO_BLK8	R/W	G_RST	0	This bit must be set to 0.
QFIFO_MODE	R/W	G_RST	0	This bit must be set to 0.

© 2019 Renesas Electronics Corporation

MISC_CTL Description *(Continued)*

Name	Type	Reset By	Reset State	Function
PRCNT[5:0]	R/W	G_RST	000001	Prefetch Read Byte Count This field controls how much data the QSpan II prefetches on the QBus. The number of bytes prefetched is four times the number programmed into this register (for example, 001100b is 48 bytes)
MSTSLV[1:0]	R	G_RST	See Table 128	Master/Slave Mode

a. If you want to map a PCI Target-Abort as an Error on the QBus — and the MA_BE_D bit is set — the TA_BE_EN bit in MISC_CTL2 register must also be set.

The SW_RST bit allows the QBus reset output (RESETO_) to be controlled in software from the PCI bus. When 1 is written to this bit, the QSpan II asserts RESETO_. There are three ways to cause the QSpan II to terminate the software reset state:

1. Clear the SW_RST bit by writing 0 to it. In this case, RESETO_ is immediately negated.
2. Assert RESETI_. In this case, the SW_RST bit is immediately cleared (set to 0) and RESETO_ is immediately negated.
3. Assert RST#. In this case, SW_RST is immediately cleared (set to 0), however RESETO_ continues to be asserted until RST# is negated.

Unexpected results can occur if the output RESETO_ on the QBus Interface of the QSpan II is used to generate the input RESETI_.

The reset state of S_BG and S_BB depends on the master mode of the QSpan II (see Table 127). If the Master Mode is MC68360, then the reset state of S_BG and S_BB is 0. If the Master Mode is MPC860 or M68040, then the reset state of S_BG and S_BB is 1.

The QB_BOC bit affects the transfer of data onto the QBus Interface in cases where the data passes through the QBus Slave Channel, the PCI Target Channel, or the IDMA/DMA Channel. There are two situations to be aware of:

1. The PBTIx_CTL and DMA_CS registers contain an INVEND bit which causes the QSpan II to use the logical inversion of the QB_BOC.
2. The QB_BOC bit does not affect the presentation of data on the QBus Interface in the case where the Register Channel is accessed.

© 2019 Renesas Electronics Corporation

With the second situation, the QSpan II does not perform byte swapping of data in the Register Channel regardless of whether the QBus is configured as Big or Little endian; this applies to all QBus register accesses, including the CON_DATA and IACK registers. Bit 31 in any QSpan II register is presented on bit 31 of the QBus (and bit 31 of the PCI bus) regardless of the QB_BOC bit.

The MSTSLV field indicates the Master and Slave modes of the QSpan II. The first bit of this field is determined by the value of BDIP_ at reset. The second bit is determined by the value of SIZ[1] at reset. The MSTSLV field is described in Table 127.

Table 128: Master/Slave Mode — MSTSLV field

MSTSLV field	Master Mode	Slave Mode
00	MC68360	MC68360 and M68040
01	MC68360	MC68360 and MPC860
10	M68040	MC68360 and M68040
11	MPC860	MC68360 and MPC860

© 2019 Renesas Electronics Corporation

Table 129: EEPROM Control and Status Register

Register Name: EEPROM_CS	Register Offset: 804

Bits	Function		
31–24	ADDR[7:0]		
23–16	DATA[7:0]		
15–08	Reserved		
07–00	ACT	READ	Reserved

EEPROM_CS Description

Name	Type	Reset By	Reset State	Function
ADDR[7:0]	See Below	PCI_RST	See Below	EEPROM read and write address
DATA[7:0]	See Below	PCI_RST	See Below	EEPROM read and write data
ACT	R	PCI_RST	0	EEPROM Active 0 = No 1 = Yes
READ	R/W	PCI_RST	0	EEPROM Read bit 0 = Write to EEPROM 1 = Read to EEPROM

This register is provided for users to read to, or write from the EEPROM through the QBus or the PCI bus. This register accepts reads or writes when the ACT bit is 0, therefore the ACT bit might need to be polled before a write is attempted. The ACT bit is 1 when the QSpan II is loading data from the EEPROM, or is in the process of completing a read or write to the EEPROM caused by an access to this register.

Writes complete on the QBus or the PCI bus regardless of the state of the ACT bit (and, therefore, regardless of whether the write to the DATA field was effective).

It there is no EEPROM (the SDA pin and ENID pin are low at PCI reset), then this register is read-only and reads return all zeros (see “Programming the EEPROM from the QBus or PCI Bus” on page 127 for more information). Access to EEPROM can be enabled after power-up using the EEPROM_ACC bit in the MISC_CTL2 register (see “EEPROM Access” on page 128).

© 2019 Renesas Electronics Corporation

Table 130: Miscellaneous Control 2 Register

Register Name: MISC_CTL2	Register Offset: 808

Bits	Function						
31–24	PCI_DIS	Reserved					
23–16	PTP_IB	KEEP_BB	MAX_RTRY	PTC_PD	TA_BE_ EN	BURST_4	PR_ SING
15–08	PRCNT2					REG_AC	QSC_PW
07–00	Reserved		QBUS_ PAR	EEPROM _ACC	NOTO	PSC_ QRST	QINT_ PME

MISC_CTL2 Description

Name	Type	Reset By	Reset State	Function
PCI_DIS	R/W	G_RST	See below	PCI Access Disabled 0 = Access from PCI interface is enabled 1 = All access to QSpan II from PCI interface is retried
PTP_IB	R/W	G_RST	0	PCI Target Channel Prefetch Count Image Based 0 = Prefetch count is not image based (use PRCNT in MISC_CTL) 1 = Prefetch count is image based (PRCNT = Image 0, PRCNT2 = Image 1)
KEEP_BB	R/W	G_RST	0	Keep Bus Busy (BB_) asserted for back-to-back cycles This bit applies to all QSpan II PCI target cycles. 0 = Bus Busy is negated after each cycle; allows change of Bus mastership 1 = Bus Busy is kept asserted for multiple cycles **Note**: Do not set this bit when the QSpan II DMA channel is used with the PowerQUICC memory controller (UPM).
MAX_RTRY [1:0]	R/W	G_RST	0	Maximum Number of Retries completed by QSpan II as a master on the PCI Bus 00b = Forever 01b = 128 10b = 256 11b = 384
PTC_PD	R/W	G_RST	0	PCI Target Channel Prefetch Disconnect 0 = TRDY# is negated between databeats until the next data is available 1 = Cycle is terminated with Disconnect if the TRDY# is going to be negated for more than eight PCI clocks.

© 2019 Renesas Electronics Corporation

MISC_CTL2 Description *(Continued)*

Name	Type	Reset By	Reset State	Function
TA_BE_EN	R/W	G_RST	0	PCI Target-Abort - Bus Error Mapping Enable 0 = When QSpan II receives a PCI Target-Abort it maps this as a normal termination on the QBus (if MA_BE_D bit in MISC_CTL is set to 1). If MA_BE_D is set to 0, then both PCI Master-Abort and Target-Abort terminations are translated to a Bus Error on QBus for delayed cycles. 1 = When the QSpan II receives a PCI Target-Abort it maps it to a Bus Error termination on the QBus for delayed cycles.
BURST_4	R/W	G_RST	0	QBus Burst 4 Data phases (for PCI target channel write transfers) 0 = QSpan II will generate partial burst on QBus (2 or 3 data phases) 1 = QSpan II will only generate QBus burst with 4 data phases (required for use with MPC860's memory controller)
PR_SING	R/W	G_RST	0	QBus Prefetch Single Dataphase 0 = QSpan II will prefetch using burst cycles as an MPC860 master 1 = QSpan II will generate single cycles to prefetch data as an MPC860 master
PR_CNT2[5:0]	R/W	G_RST	000001	Prefetch Read Byte Count 2 This field controls how much data the Qspan II prefetches on the QBus for an access through the PCI target image 1 (when above PTP_IB bit is set). The number of bytes prefetched is 4 times the number programmed into this field (for example, 001100 is 48 bytes)
QSC_PW	R/W	G_RST	0	QBus Slave Channel Posted Write 0 = Default mode (for QSpan (CA91C860B, CA91L860B) backward compatibility) 1 = Improves the dequeuing of posted writes in the QBus Slave Channel
REG_AC	R/W	G_RST	0	Register Access Control 0 = Normal Mode, register access defaults to PCI bus 1 = Register Access port is parked at the last bus to access the register block
QBUS_PAR	R/W	G_RST	0	QBus Parity Encoding 0 = Even Parity 1 = Odd Parity

© 2019 Renesas Electronics Corporation

MISC_CTL2 Description *(Continued)*

Name	Type	Reset By	Reset State	Function
EEPROM_ ACC	R/W	G_RST	0	EEPROM Access after Power-up 0 = EEPROM access is disabled, if powered up without EEPROM (SDA and ENID low at power-up) 1 = EEPROM access is enabled, if powered up without EEPROM
NOTO	R/W	G_RST	0	No Transaction Ordering 0 = Enable Transaction Ordering between the PCI Target Channel and QBus Slave Channel 1 = Disable Transaction Ordering between the PCI Target Channel and QBus Slave Channel
PSC_QRST	R/W	G_RST	0	Power State Change ($D3_{hot}$ to D0) causes QBus reset 0 = Power State Change from $D3_{hot}$ to D0, does not cause a QBus reset 1 = Power State Change from $D3_{hot}$ to D0 (initiated by the Host), causes an internal QSpan II reset and RESETO_ to be asserted
QINT_PME	R/W	G_RST	0	QINT_ assertion in $D3_{hot}$ Power State generates PME# 0 = QINT_ assertion does not generate PME# 1 = QINT_ assertion in $D3_{hot}$ Power State can generate PME# (if enabled by PME_SP in PCI_PMC register)

If an EEPROM is only used for storing Vital Product Data (VPD), access to EEPROM can be enabled after power-up — SDA and ENID low during Reset — by setting the EEPROM_ACC bit.

To maximize the performance improvements of the QSpan II, set the following bits to 1: BURST_4, PWEN bit in PBTIx_CTL, REG_AC, QSC_PW, and NOTO. This will maximize performance if there are no ordering requirements between transactions in the PCI Target Channel and the QBus Slave Channel.

QSpan II can be setup to retry all PCI access while the QBus processor is used to configure the PCI configuration registers. This can be accomplished using the PCI_DIS bit in MISC_CTL2. The power-up pin, PCI_DIS, must be pulled high during PCI reset to set the PCI_DIS bit to 1. The PCI_DIS bit can be set to 0 by the QBus processor when it completes programming the QSpan II registers. Once completed, this will then allow the QSpan II to respond to PCI configuration cycles.

The PCI_DIS bit can also be programmed from the EEPROM, in this case after the QSpan II registers are loaded from EEPROM, the registers can be modified by the QBus processor before the external Host configures the QSpan II.

© 2019 Renesas Electronics Corporation

Table 131: PCI Bus Arbiter Control Register

Register Name: PARB_CTL	Register Offset: 810

Bits	Function							
31–24	Reserved							
23–16	Reserved							
15–08	M7_PRI	M6_PRI	M5_PRI	M4_PRI	M3_PRI	M2_PRI	M1_PRI	QS_PRI
07–00	PCI_ ARB_EN	Reserved			PARK	BM_PARK		

PARB_CTL Description

Name	Type	Reset By	Reset State	Function
Mx_PRI	R/W	G_RST	0	Arbitration Level for PCI Master Device x 0 = Low priority 1 = High priority
QS_PRI	R/W	G_RST	0	Arbitration Level for Qspan II 0 = Low priority 1 = High priority
PCI_ARB_EN	R	G_RST	See Below	QSpan II's PCI Bus Arbiter 0 = Disabled 1 = Enabled
PARK	R/W	G_RST	0	PCI Bus Parking Scheme 0 = Last Master 1 = Select Master based on BM_PARK
BM_PARK[2:0]	R/W	G_RST	0	Select Master for PCI Bus Parking

© 2019 Renesas Electronics Corporation

QSpan II's internal PCI Bus arbiter is enabled by a power-up option. If the PCI_ARB_EN pin is sampled high at the negation of Reset, the QSpan II arbiter is enabled. When disabled, an external arbiter is used and REQ#/GNT# are used by the QSpan II to arbitrate for access to the PCI Bus. If the internal arbiter is used, the REQ#/GNT# lines can be used by an external Bus master to arbitrate for the PCI Bus.

Table 132: Parked PCI Master

BM_PARK [2:0]	Parked PCI Master	External Pins
000	Qspan II	None
001	M1	EXT_REQ#[1]/EXT_GNT#[1]
010	M2	EXT_REQ#[2]/EXT_GNT#[2]
011	M3	EXT_REQ#[3]/EXT_GNT#[3]
100	M4	EXT_REQ#[4]/EXT_GNT#[4]
101	M5	EXT_REQ#[5]/EXT_GNT#[5]
110	M6	EXT_REQ#[6]/EXT_GNT#[6]
111	M7	REQ#/EXT_GNT#

© 2019 Renesas Electronics Corporation

Table 133: QBus Slave Image 0 Control Register

Register Name: QBSI0_CTL	Register Offset: F00

Bits	Function		
31–24	PWEN	Reserved	PAS
23–16	PREN	Reserved	
15–08	Reserved		
07–00	Reserved		

QBSI0_CTL Description

Name	Type	Reset By	Reset State	Function
PWEN	R/W/E	PCI_RST	See Below	Posted Write Enable 0 = Disable 1 = Enable
PAS	R/W/E	PCI_RST	See Below	PCI Bus Address Space 0 = PCI Bus Memory Space 1 = PCI Bus I/O Space
PREN	R/W	PCI_RST	See Below	Prefetch Read Enable 0 = Disable 1 = Enable

The QBSI0 slave image is used when QSpan II is selected by the assertion of CSPCI_ and IMSEL (Image Select) is 0. It indicates, among other things, that the QSpan II does not burst to PCI I/O space and responds to such attempts by generating a bus error on the QBus (see “Transaction Decoding and QBus Slave Images” on page 37.

Tables 134 to 137 indicate how the QSpan II Slave module responds to QBus masters as a function of the PWEN and PAS bits settings.

Values in this register (except PREN) can be programmed from a serial EEPROM (for more information, see Chapter 9: “The EEPROM Channel” on page 121). If they are not, their reset state is 0.

© 2019 Renesas Electronics Corporation

Table 134: QSpan II Response to a Single-Read Cycle Access

PREN	PAS	Read Cycle (R/W_ negated)
0	0	Delayed Read
0	1	Delayed Read
1	0	Delayed Prefetched Read
1	1	Delayed Read

Table 135: QSpan II Response to a Burst-Read Cycle Access

PREN	PAS	Read Cycle (R/W_ negated)
0	0	Delayed Read
0	1	Bus Error
1	0	Delayed Read
1	1	Bus Error

Table 136: QSpan II Response to a Single-Write Cycle Access

PWEN	PAS	Write Cycle (R/W_ asserted)
0	0	Delayed Write
0	1	Delayed Write
1	0	Posted Write
1	1	Delayed Write

Table 137: QSpan II Response to a Burst-Write Cycle Access

PWEN	PAS	Write Cycle (R/W_ asserted)
0	0	Posted Write
0	1	Bus Error
1	0	Posted Write
1	1	Bus Error

© 2019 Renesas Electronics Corporation

Table 138: QBus Slave Image 0 Address Translation Register

Register Name: QBSI0_AT	Register Offset: F04

Bits	Function		
31–24	TA		
23–16	TA		
15–08	Reserved		
07–00	BS	Reserved	EN

QBSI0_AT Description

Name	Type	Reset By	Reset State	Function
TA[31:16]	R/W/E	PCI_RST	See Below	Translation Address
BS[3:0]	R/W/E	PCI_RST	See Below	Block Size (64 Kbyte*2^{BS})
EN	R/W/E	PCI_RST	See Below	Enable Address Translation 0 = Disable 1 = Enable

© 2019 Renesas Electronics Corporation

The Translation Address specifies the values of the address lines substituted when generating the address for the transaction on the PCI bus. Address translation is enabled by setting the EN bit. Block Size is used to determine which address lines are translated (see Table 139 and “Mapping of EEPROM Bits to QSpan II Registers” on page 124). Otherwise, their reset state is 0.

Table 139: Address Lines Translated as a Function of Block Size

BS	Block Size	Address Lines Translated
0000	64 Kbytes	A31–A16
0001	128 Kbytes	A31–A17
0010	256 Kbytes	A31–A18
0011	512 Kbytes	A31–A19
0100	1 Mbyte	A31–A20
0101	2 Mbytes	A31–A21
0110	4 Mbytes	A31–A22
0111	8 Mbytes	A31–A23
1000	16 Mbytes	A31–A24
1001	32 Mbytes	A31–A25
1010	64 Mbytes	A31–A26
1011	128 Mbytes	A31–A27
1100	256 Mbytes	A31–A28
1101	512 Mbytes	A31–A29
1110	1 Gbyte	A31–A30
1111	2 Gbytes	A31

© 2019 Renesas Electronics Corporation

Table 140: QBus Slave Image 1 Control Register

Register Name: QBSI1_CTL	Register Offset: F10

Bits	Function		
31–24	PWEN	Reserved	PAS
23–16	PREN	Reserved	
15–08	Reserved		
07–00	Reserved		

QBSI1_CTL Description

Name	Type	Reset By	Reset State	Function
PWEN	R/W	G_RST	0	Posted Write Enable 0 = Disable 1 = Enable
PAS	R/W	G_RST	0	PCI Bus Address Space 0 = PCI Bus Memory Space 1 = PCI Bus I/O Space
PREN	R/W	G_RST	0	Prefetch Read Enable 0 = Disable 1 = Enable

This slave image definition is used when QSpan II is selected by the assertion of CSPCI_ and IMSEL (Image Select) is 1. It indicates, among other things, that the QSpan II does not burst to PCI I/O space and responds to such attempts by generating a bus error on the QBus. Single posted writes to I/O space are treated as delayed writes (see “Transaction Decoding and QBus Slave Images” on page 37).

Tables 141 to 144 indicate how the QSpan II Slave module responds to QBus masters as a function of the PWEN and PAS bits setting.

Unlike Slave Image 0, this register cannot be programmed with a serial EEPROM.

© 2019 Renesas Electronics Corporation

Table 141: QSpan II Response to a Single-Read Cycle Access

PREN	PAS	Read Cycle (R/W_ negated)
0	0	Delayed Read
0	1	Delayed Read
1	0	Delayed Prefetched Read
1	1	Delayed Read

Table 142: QSpan II Response to a Burst-Read Cycle Access

PREN	PAS	Read Cycle (R/W_ negated)
0	0	Delayed Read
0	1	Bus Error
1	0	Delayed Read
1	1	Bus Error

Table 143: QSpan II Response to a Single-Write Cycle Access

PWEN	PAS	Write Cycle (R/W_ asserted)
0	0	Delayed Write
0	1	Delayed Write
1	0	Posted Write
1	1	Delayed Write

Table 144: QSpan II Response to a Burst-Write Cycle Access

PWEN	PAS	Write Cycle (R/W_ asserted)
0	0	Posted Write
0	1	Bus Error
1	0	Posted Write
1	1	Bus Error

© 2019 Renesas Electronics Corporation

Table 145: QBus Slave Image 1 Address Translation Register

Register Name: QBSI1_AT	Register Offset: F14

Bits	Function		
31–24	TA		
23–16	TA		
15–08	Reserved		
07–00	BS	Reserved	EN

QBSI1_AT Description

Name	Type	Reset By	Reset State	Function
TA[31:16]	R/W	G_RST	0	Translation Address See below
BS[3:0]	R/W	G_RST	0	Block Size (64 Kbyte*2^{BS})
EN	R/W	G_RST	0	Enable Address Translation 0 = Disable 1 = Enable

The Translation Address specifies the values of the address lines substituted when generating the address for the transaction on the PCI bus. Address translation is enabled by setting the EN bit. The Block Size determines which address lines are translated (see Table 146).

Unlike Slave Image 0, this register cannot be programmed with a serial EEPROM.

© 2019 Renesas Electronics Corporation

Table 146: QBus Address Lines Compared as a function of Block Size

BS	Block Size	Address Lines Translated
0000	64 Kbytes	A31–A16
0001	128 Kbytes	A31–A17
0010	256 Kbytes	A31–A18
0011	512 Kbytes	A31–A19
0100	1 Mbyte	A31–A20
0101	2 Mbytes	A31–A21
0110	4 Mbytes	A31–A22
0111	8 Mbytes	A31–A23
1000	16 Mbytes	A31–A24
1001	32 Mbytes	A31–A25
1010	64 Mbytes	A31–A26
1011	128 Mbytes	A31–A27
1100	256 Mbytes	A31–A28
1101	512 Mbytes	A31–A29
1110	1 Gbyte	A31–A30
1111	2 Gbytes	A31

© 2019 Renesas Electronics Corporation

Table 147: QBus Error Log Control and Status Register

Register Name: QB_ERRCS	Register Offset: F80

Bits	Function			
31–24	EN	Reserved		ES
23–16	Reserved			
15–08	Reserved			
07–00	TC_ERR		Reserved	SIZ_ERR

QB_ERRCS Description

Name	Type	Reset By	Reset State	Function
EN	R/W	G_RST	0	Enable QBus Error Log 0 = Disable error logging 1 = Enable error logging
ES	R/Write 1 to Clear	G_RST	0	QBus Error Status 0 = No error currently logged 1 = Error currently logged
TC_ERR[3:0]	R	G_RST	0	QBus Transaction Code Error Log
SIZ_ERR[1:0]	R	G_RST	0	QBus SIZ Field Error Log

The QBus Master Module logs errors when a posted write transaction from the Px-FIFO results in a bus error. The assertion of the ES bit can be mapped to the QSpan II's interrupt pins by programming the Interrupt Control Register and the Interrupt Direction Register (see Table 120 on page 263 and Table 121 on page 266, respectively). The mapping of interrupts occurs if the EN bit in the QBus Error Log Control and Status Register is set.

To disable the QBus Error Logging after it is enabled, the ES bit must not be set. If the ES bit is set, it can be cleared by writing a 1 at the same time as a 0 is written to the EN bit.

The TC_ERR and SIZ_ERR fields contain valid information when the ES bit is set. At all other times these fields will return all zeros when read.

© 2019 Renesas Electronics Corporation

Table 148: QBus Address Error Log

Register Name: QB_AERR	Register Offset: F84

Bits	Function
31–24	QAERR
23–16	QAERR
15–08	QAERR
07–00	QAERR

QB_AERR Description

Name	Type	Reset By	Reset State	Function
QAERR[31:0]	R	G_RST	0	QBus Address Error Log

The QBus Master Module will log errors when a posted write transaction results in a bus error.

This register logs the QBus address information. Its contents are qualified by bit ES of the QBus Error Log Control and Status Register (see Table 147 on page 291). The QAERR field contains valid information when ES is set. At all other times, a read of this register will return all zeros.

© 2019 Renesas Electronics Corporation

Table 149: QBus Data Error Log

Register Name: QB_DERR	Register Offset: F88

Bits	Function
31–24	QDERR
23–16	QDERR
15–08	QDERR
07–00	QDERR

QB_DERR Description

Name	Type	Reset By	Reset State	Function
QDERR[31:0]	R	G_RST	0	QBus Data Error Log

The QBus Master Module will log errors when a posted write transaction results in a bus error.

This register logs the QBus data information. Its contents are qualified by bit ES of the QBus Error Log Control and Status register (see Table 147 on page 291).

© 2019 Renesas Electronics Corporation

Table 150: I_2O Outbound Post_List Interrupt Status Register

Register Name: I2O_OPIS	Register Offset: 030

Bits	Function		
31–24	Reserved		
23–16	Reserved		
15–08	Reserved		
07–00	Reserved	OP_ISR	Reserved

I2O_OPIS Description

Name	Type	Reset By	Reset State	Function
OP_ISR	R/W	G_RST	0	Outbound Post_List Interrupt Service Request 0 = Outbound Post_List FIFO is empty 1 = Outbound Post_List FIFO is not empty. The value of the interrupt mask bit does not affect this bit.

© 2019 Renesas Electronics Corporation

Table 151: $I_2$0 Outbound Post_List Interrupt Mask Register

Register Name: I2O_OPIM	Register Offset: 034

Bits	Function		
31–24	Reserved		
23–16	Reserved		
15–08	Reserved		
07–00	Reserved	OP_IM	Reserved

I2O_OPIM Description

Name	Type	Reset By	Reset State	Function
OP_IM	R	G_RST	1	Outbound Post_List Interrupt Mask 0 = Outbound Post_List Interrupt is enabled 1 = Outbound Post_List Interrupt is masked

© 2019 Renesas Electronics Corporation

Table 152: I_2O Inbound Queue Register

Register Name: I2O_INQ	Register Offset: 040

Bits	Function
31–24	IN_Q
23–16	IN_Q
15–08	IN_Q
07–00	IN_Q

I2O_INQ Description

Name	Type	Reset By	Reset State	Function
IN_Q[31:0]	R/WP	G_RST	0	I_2O Inbound Queue This register controls the access to the inbound queue. The 32-bit value written into this register is written by QSpan II to the Inbound Post_List FIFO which is located in Qbus memory at the address specified by the Inbound Post_List Top Pointer. Accesses to this register result in retries from the time of the PCI write until the write completes on the QBus. PCI reads to this register return data from the Inbound Free_List FIFO, located in Qbus memory on the QBus at the address specified by the Inbound Free_List Bottom Pointer. A value of 0xFFFF FFFF is returned if the Inbound Free_List FIFO is empty.

© 2019 Renesas Electronics Corporation

Table 153: I_2O Outbound Queue Register

Register Name: I2O_OUTQ	Register Offset: 044

Bits	Function
31–24	OUT_Q
23–16	OUT_Q
15–08	OUT_Q
07–00	OUT_Q

I2O_OUTQ Description

Name	Type	Reset By	Reset State	Function
OUT_Q[31:0]	R/WP	G_RST	0	I_2O Outbound Queue This register controls the host processor access to the outbound queue. The 32-bit value written into this register is written by QSpan II to the Outbound Post_List FIFO which is located in Qbus memory at the address specified by the Outbound Post_List Top Pointer. Accesses to this register result in retries from the time of the PCI write until the write completes on the QBus. PCI reads to this register return data from the Outbound Free_List FIFO, located in Qbus memory on the QBus at the address specified by the Outbound Free_List Bottom Pointer. A value of 0xFFFF FFFF is returned if the Outbound Free_List FIFO is empty.

© 2019 Renesas Electronics Corporation

© 2019 Renesas Electronics Corporation

Appendix B: Timing

This appendix provides timing information for the QBus interface. PCI interface timing is not detailed since the QSpan II is *PCI 2.2 Specification* compliant. Timing parameters for all processors are listed first, followed by the timing diagrams.

The following topics are discussed:

- "Timing Parameters" on page 300
- "Wait State Insertion — QBus Slave Module" on page 314
- "Timing Diagrams" on page 315

B.1 Overview

The timing tables described in this appendix include the following:

- Table 154, "Timing Parameters for MC68360 Interface" on page 301
- Table 155, "Timing Parameters for MPC860 Interface" on page 306
- Table 156, "Timing Parameters for M68040 Interface" on page 310
- Table 157, "Timing Parameters for Interrupts and Resets" on page 313
- Table 158, "Timing Parameters for Reset Options" on page 313

The sets of diagrams described in this appendix include the following:

- "QBus Interface — MC68360" on page 315
- "QBus Interface — MPC860" on page 330
- "QBus Interface — M68040" on page 345
- "Interrupts and Resets" on page 355
- "Reset Options" on page 357

© 2019 Renesas Electronics Corporation

B.2 Timing Parameters

Test conditions for timing parameters in Table 154 to Table 158 are:

- Test Conditions for 3.3V
  - — Commercial (C): 0ºC to 70ºC, 3.3V±5%
  - — Industrial (I): -40ºC to 85ºC, 3.3V±5%

Use the following figure as a reference when reading the timing diagrams in this appendix.

Figure 24: Reference Voltages for AC Timing Specification

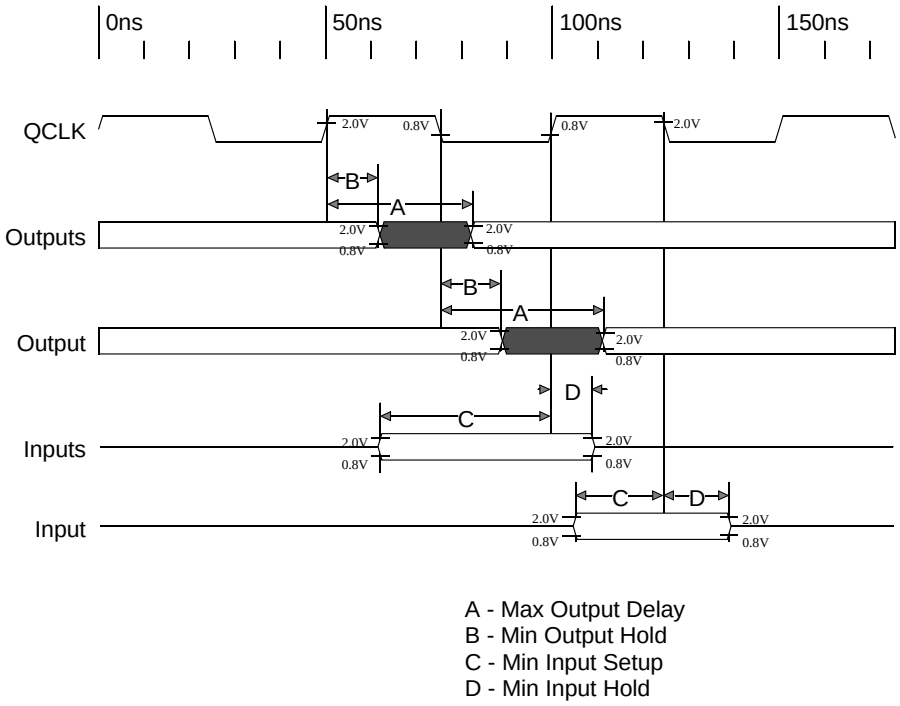

In order to condense the diagrams and tables, certain multifunctional QBus signals are presented in their bus specific forms (for example, DSACK1_/TA_ is referred to as TA_ in the MPC860 and M68040 sections).

© 2019 Renesas Electronics Corporation

Table 154: Timing Parameters for MC68360 Interface

Timing Parameter	Description	Frequency/Temperature Options				Units	Note
		50Cx/50Ix		40Cx			
		Min	Max	Min	Max		
t_{200}	QCLK Frequency	-	33	-	25	MHz	-
t_{201}	Period	30	-	40	-	ns	-
t_{202}	Clock Pulse Width (Low)	14	-	19	-	ns	-
t_{204}	Clock Pulse Width (High)	14	-	19	-	ns	-
t_{205}	Clock Rise Time (tr)	-	2	-	2	ns	-
t_{206}	Clock Fall Time (t_f)	-	2	-	2	ns	-
t_{210a}	A asserted from QCLK (positive edge)	-	9.6	-	10.7	ns	2
t_{210b}	BERR_ asserted from QCLK (positive edge)	-	9.2	-	10.2	ns	2
t_{210c}	DSACK0_, DSACK1_ asserted from QCLK (positive edge)	-	9.4	-	10.4	ns	2
t_{210d}	HALT_ asserted from QCLK (positive edge)	-	8.9	-	9.9	ns	2
t_{210e}	R/W_ asserted from QCLK (positive edge)	-	8	-	8.9	ns	2
t_{210f}	SIZ asserted from QCLK (positive edge)	-	7.9	-	8.8	ns	2
t_{210g}	TC asserted from QCLK (positive edge)	-	8.4	-	9.3	ns	2
t_{211a}	BGACK_ asserted from QCLK (positive edge)	-	9.2	-	10.2	ns	1
t_{211b}	BR_ asserted from QCLK (positive edge)	-	7.4	-	8.2	ns	2
t_{212a}	DSACK0_, DSACK1_ tristated from QCLK (negative edge)	-	9.4	-	10.4	ns	-
t_{212b}	BERR_ tristated from QCLK (negative edge)	-	9.6	-	10.6	ns	-
t_{212c}	HALT_ tristated from QCLK (negative edge)	-	9.1	-	10.1	ns	-
t_{213}	D asserted (slave reads) from QCLK (negative edge)	-	14.8	-	16.4	ns	1

© 2019 Renesas Electronics Corporation

Table 154: Timing Parameters for MC68360 Interface *(Continued)*

Timing Parameter	Description	Frequency/Temperature Options				Units	Note
		50Cx/50Ix		40Cx			
		Min	Max	Min	Max		
t_{214}	D tristated (slave reads) from QCLK (positive edge)	-	13.7	-	15.2	ns	-
t_{215a}	AS_ asserted from QCLK (negative edge)	-	8	-	8.9	ns	1
t_{215b}	DS_ asserted from QCLK (negative edge)	-	7.8	-	8.7	ns	-
t_{216a}	AS_ tristated from QCLK (positive edge)	-	7.9	-	8.8	ns	-
t_{216b}	DS_ tristated from QCLK (positive edge)	-	8.1	-	9	ns	-
t_{217a}	BERR_ setup to QCLK (negative edge)	0	-	0	-	ns	-
t_{217b}	BG_ setup to QCLK (negative edge)	-0.9	-	-1.0	-	ns	-
t_{217c}	BGACK_ setup to QCLK (negative edge)	0	-	0	-	ns	-
t_{217d}	DSACK0_, DSACK1_ setup to QCLK (negative edge)	0	-	0	-	ns	-
t_{217e}	HALT_ setup to QCLK (negative edge)	0	-	0	-	ns	-
t_{218a}	BERR_ hold from QCLK (negative edge)	0	-	0	-	ns	-
t_{218b}	BG_ hold from QCLK (negative edge)	0	-	0	-	ns	-
t_{218c}	BGACK_ hold from QCLK (negative edge)	1.4	-	1.5	-	ns	-
t_{218d}	DSACK0_, DSACK1_ hold from QCLK (negative edge)	0	-	0	-	ns	-
t_{218e}	HALT_ hold from QCLK (negative edge)	0	-	0	-	ns	-
t_{219a}	A setup to QCLK (negative edge)	7	-	7.8	-	ns	-
t_{219b}	AS_ setup to QCLK (negative edge)	3.4	-	3.8	-	ns	-
t_{219c}	CSPCI_ setup to QCLK (negative edge)	2.8	-	3.1	-	ns	-

© 2019 Renesas Electronics Corporation

Table 154: Timing Parameters for MC68360 Interface *(Continued)*

Timing Parameter	Description	Frequency/Temperature Options				Units	Note
		50Cx/50Ix		40Cx			
		Min	Max	Min	Max		
t_{219d}	CSREG_ setup to QCLK (negative edge)	7	-	7.8	-	ns	-
t_{219e}	IMSEL setup to QCLK (negative edge)	3	-	3.3	-	ns	-
t_{219f}	R/W_ setup to QCLK (negative edge)	3.2	-	3.6	-	ns	-
t_{219g}	SIZ setup to QCLK (negative edge)	6.6	-	7.3	-	ns	-
t_{219h}	TC setup to QCLK (negative edge)	4.5	-	5	-	ns	-
t_{220a}	A hold from QCLK (negative edge)	0.1	-	0.1	-	ns	-
t_{220b}	AS_ hold from QCLK (negative edge)	0.5	-	0.5	-	ns	-
t_{220c}	CSPCI_ hold from QCLK (negative edge)	0.9	-	1	-	ns	-
t_{220d}	CSREG_ hold from QCLK (negative edge)	1.5	-	1.7	-	ns	-
t_{220e}	IMSEL hold from QCLK (negative edge)	0	-	0	-	ns	-
t_{220f}	R/W_ hold from QCLK (negative edge)	0.9	-	1	-	ns	-
t_{220g}	SIZ hold from QCLK (negative edge)	0	-	0	-	ns	-
t_{220h}	TC hold from QCLK (negative edge)	0	-	0	-	ns	-
t_{221}	D setup (master reads) to QCLK (negative edge)	0	-	0	-	ns	-
t_{222}	D hold (master reads) from QCLK (negative edge)	2.1	-	2.3	-	ns	-
t_{223}	D setup (slave writes) to QCLK (positive edge)	0	-	0	-	ns	-
t_{224}	D hold (slave writes) from QCLK (positive edge)	1.8	-	2	-	ns	-
t_{225}	D asserted (master writes) from QCLK (positive edge)	-	9.8	-	10.9	ns	1

© 2019 Renesas Electronics Corporation

Table 154: Timing Parameters for MC68360 Interface *(Continued)*

Timing Parameter	Description	Frequency/Temperature Options				Units	Note
		50Cx/50Ix		40Cx			
		Min	Max	Min	Max		
t_{226}	D tristated (master writes) from QCLK (positive edge)	3.9	9.8	4.3	10.9	ns	-
t_{234}	BGACK_ tristated from QCLK (negative edge)	-	9.2		10.2	ns	-
t_{235a}	BGACK_ negated from QCLK (positive edge)	3.2	7.4	3.6	8.2	ns	2
t_{235b}	BR_ negated from QCLK (positive edge)	3.2	7.3	3.5	8.1	ns	1
t_{236a}	A tristated or negated from QCLK (positive edge)	3.8	9.6	4.3	10.7	ns	1
t_{236b}	BERR_ tristated or negated from QCLK (positive edge)	3.7	9.2	4.1	10.2	ns	1
t_{236c}	DSACK0_, DSACK1_ tristated or negated from QCLK (positive edge)	3.3	9.4	3.7	10.4	ns	1
t_{236d}	HALT_ tristated or negated from QCLK (positive edge)	3.5	8.9	3.9	9.9	ns	1
t_{236e}	R/W_ tristated or negated from QCLK (positive edge)	3.2	8	3.6	8.9	ns	1
t_{236f}	SIZ tristated or negated from QCLK (positive edge)	3.1	7.9	3.5	8.8	ns	1
t_{236g}	TC tristated or negated from QCLK (positive edge)	3.3	8.4	3.7	9.3	ns	1
t_{250}	DREQ_ asserted (or negated) from QCLK (negative edge)	4	9.3	4.4	10.4	ns	2
t_{251}	D asserted (valid) from DACK_ (negative edge)	-	12.5	-	13.9	ns	1
t_{252}	D tristated from DACK_ (positive edge)	3.9	12.5	4.4	13.9	ns	-
t_{253a}	AS_ setup to QCLK (negative edge)	3.4	-	3.8	-	ns	-
t_{253b}	CSPCI_ setup to QCLK (negative edge)	2.8	-	3.1	-	-	-
t_{254}	DACK_ setup to QCLK (negative edge)	2.5	-	2.8	-	ns	-

© 2019 Renesas Electronics Corporation

Table 154: Timing Parameters for MC68360 Interface *(Continued)*

Timing Parameter	Description	Frequency/Temperature Options				Units	Note
		50Cx/50Ix		40Cx			
		Min	Max	Min	Max		
t_{255}	DSACK0_, DSACK1_ setup to QCLK (negative edge)	0.6	-	0.6	-	ns	-
t_{256}	BERR_ setup to QCLK (negative edge)	3	-	3.3	-	ns	-
t_{257}	HALT_ setup to QCLK (negative edge)	2	-	2.2	-	ns	-
t_{258}	D setup to QCLK (negative edge)	0	-	0	-	ns	-
t_{259a}	AS_ hold from QCLK (negative edge)	0.5	-	0.5	-	ns	-
t_{259b}	CSPCI_ hold from QCLK (negative edge)	0.9	-	1	-	ns	-
t_{259c}	D hold from QCLK (negative edge)	2.1	-	2.4	-	ns	-
t_{259d}	DACK_ hold from QCLK (negative edge)	0.6	-	0.7	-	ns	-
t_{259e}	DSACK0_, DSACK1_ hold from QCLK (negative edge)	0.7	-	0.8	-	ns	-
t_{259f}	BERR_ hold from QCLK (negative edge)	0.5	-	0.6	-	ns	-
t_{259g}	HALT_ hold from QCLK (negative edge)	1.2	-	1.3	-	ns	-
t_{260}	DONE_ setup to QCLK (negative edge)	0.1	-	0.1	-	ns	-
t_{261}	DONE_ hold from QCLK (negative edge)	1.8	-	2	-	ns	-
t_{262a}	AS_ negated from QCLK (negative edge)	3.4	8	3.8	8.9	ns	1
t_{262b}	DS_ negated from QCLK (negative edge)	3.4	7.8	3.8	8.7	ns	1

1. Minimum output hold time specified for load of 10 pF. Maximum output delay specified for load of 50 pF.

© 2019 Renesas Electronics Corporation

2. Minimum output hold time specified for load of 10 pF. Maximum output delay specified for load of 35 pF.

During IDMA fast termination cycles the maximum MC68360 QCLK frequency is 30 MHz. This applies to every variant of QSpan II.

Table 155: Timing Parameters for MPC860 Interface

		Frequency/Temperature Options					
		50Cx/50Ix		40Cx			
Timing Parameter	Description	Min	Max	Min	Max	Units	Note
t_{300}	QCLK Frequency	-	50	-	40	MHz	-
t_{301}	Period	20	-	25	-	ns	-
t_{302}	Clock Pulse Width (Low)	8	-	10	-	ns	-
t_{304}	Clock Pulse Width (High)	8	-	10	-	ns	-
t_{305}	Clock Rise Time (t_r)	-	2	-	2	ns	-
t_{306}	Clock Fall Time (t_f)	-	2	-	2	ns	-
t_{310a}	A asserted from QCLK (positive edge)	-	8.9	-	10.7	ns	1
t_{310b}	BB_ asserted from QCLK (positive edge)	-	8.2	-	9.8	ns	1
t_{310c}	BURST_ asserted from QCLK (positive edge)	-	7.5	-	9.6	ns	1
t_{310d}	R/W_ asserted from QCLK (positive edge)	-	6.9	-	8.9	ns	1
t_{310e}	SIZ asserted from QCLK (positive edge)	-	6.9	-	8.8	ns	1
t_{310f}	TA_ asserted from QCLK (positive edge)	-	8.2	-	10.5	ns	1
t_{310g}	TC asserted from QCLK (positive edge)	-	7.3	-	9.3	ns	1
t_{310h}	TEA_ asserted from QCLK (positive edge)	-	8.0	-	9.6	ns	1
t_{310i}	TRETRY_ asserted from QCLK (positive edge)	-	8	-	10.2	ns	1
t_{310j}	TS_ asserted from QCLK (positive edge)	-	7.3	-	9.4	ns	1
t_{310k}	BDIP_ asserted from QCLK (positive edge)	-	7.6	-	9.8	ns	1
t_{311}	BR_ asserted (or negated) from QCLK (positive edge)	2.8	6.4	3.6	8.2	ns	2
t_{312a}	BB_ tristated from QCLK (negative edge)	-	8	-	10.2	ns	-
t_{312b}	TS_ tristated from QCLK (negative edge)	-	7.5	-	9.6	ns	-
t_{313a}	BB_ setup to QCLK (positive edge)	4.5	-	5.8	-	ns	-

© 2019 Renesas Electronics Corporation

Table 155: Timing Parameters for MPC860 Interface *(Continued)*

Timing Parameter	Description	Frequency/Temperature Options				Units	Note
		50Cx/50Ix		40Cx			
		Min	Max	Min	Max		
t_{313b}	BDIP_ setup to QCLK (positive edge)	2.4	-	3	-	ns	-
t_{313c}	BG_ setup to QCLK (positive edge)	4.7	-	6	-	ns	-
t_{313d}	BURST_ setup to QCLK (positive edge)	4.4	-	5.6	-	ns	-
t_{313e}	D setup to QCLK (positive edge)	6	-	7.7	-	ns	3
t_{313f}	IMSEL setup to QCLK (positive edge)	3.9	-	5	-	ns	-
t_{313g}	TA_ setup to QCLK (positive edge)	5.5	-	7	-	ns	-
t_{313h}	TEA_ setup to QCLK (positive edge)	6	-	7.6	-	ns	-
t_{313i}	TRETRY_ setup to QCLK (positive edge)	5.3	-	6.8	-	ns	-
t_{314}	D valid (slave reads) from QCLK (positive edge)	3	9.5	3.9	12.2	ns	1,3
t_{315a}	A_ hold from QCLK (positive edge)	0.7	-	0.8	-	ns	-
t_{315b}	BB_ hold from QCLK (positive edge)	0	-	0	-	ns	-
t_{315c}	BDIP_ hold from QCLK (positive edge)	0.6	-	0.7	-	ns	-
t_{315d}	BG_ hold from QCLK (positive edge)	0	-	0	-	ns	-
t_{315e}	BURST_ hold from QCLK (positive edge)	0.5	-	0.6	-	ns	-
t_{315f}	CSPCI_ hold from QCLK (positive edge)	0.4	-	0.5	-	ns	-
t_{315g}	CSREG_ hold from QCLK (positive edge)	0.5	-	0.6	-	ns	-
t_{315h}	D hold from QCLK (positive edge)	1.6	-	2	-	ns	3
t_{315i}	IMSEL hold from QCLK (positive edge)	0	-	0	-	ns	-
t_{315j}	R/W_ hold from QCLK (positive edge)	0.6	-	0.7	-	ns	-
t_{315k}	SIZ hold from QCLK (positive edge)	0.9	-	1.1	-	ns	-
t_{315l}	TA_ hold from QCLK (positive edge)	0.2	-	0.2	-	ns	-
t_{315m}	TC hold from QCLK (positive edge)	1.8	-	2.2	-	ns	-
t_{315n}	TEA_ hold from QCLK (positive edge)	0.3	-	0.4	-	ns	-
t_{315o}	TRETRY_ hold from QCLK (positive edge)	0.3	-	0.3	-	ns	-
t_{315p}	TS_ hold from QCLK (positive edge)	0.6	-	0.8	-	ns	-
t_{316}	D tristated from QCLK (positive edge)	3.4	12.0	4.3	15.2	ns	3
t_{317}	D enabled from QCLK (positive edge)	-	12.0	-	15.2	ns	3

© 2019 Renesas Electronics Corporation

Table 155: Timing Parameters for MPC860 Interface *(Continued)*

Timing Parameter	Description	Frequency/Temperature Options				Units	Note
		50Cx/50Ix		40Cx			
		Min	Max	Min	Max		
t_{334}	D valid (master writes) from QCLK (positive edge)	-	8.5	-	10.9	ns	1,3
t_{335a}	TA_ tristated from QCLK (negative edge)	-	8.2	-	10.5	ns	-
t_{335b}	TEA_ tristated from QCLK (negative edge)	-	8.1	-	10.4	ns	-
t_{335c}	TRETRY_ tristated from QCLK (negative edge)	-	7.8	-	10	ns	-
t_{336a}	A negated from QCLK (positive edge)	-	8.4	-	10.7	ns	1
t_{336b}	BB_ negated from QCLK (positive edge)	2.7	6.4	3.5	8.1	ns	1
t_{336c}	BURST_ negated from QCLK (positive edge)	-	7.8	-	10	ns	1
t_{336d}	R/W_ negated from QCLK (positive edge)	-	6.9	-	8.9	ns	1
t_{336e}	SIZ negated from QCLK (positive edge)	-	6.9	-	8.8	ns	1
t_{336f}	TA_ negated from QCLK (positive edge)	2.8	7.3	3.7	9.3	ns	1
t_{336g}	TC negated from QCLK (positive edge)	-	8.2	-	10.5	ns	1
t_{336h}	TEA_ negated from QCLK (positive edge)	3.2	9.3	4.1	11.9	ns	1
t_{336i}	TRETRY_ negated from QCLK (positive edge)	3	8.1	3.8	10.3	ns	1
t_{336j}	TS_ negated from QCLK (positive edge)	3.5	6.4	4.6	8.2	ns	1
t_{336k}	BDIP_ negated from QCLK (positive edge)	-	7.8	-	10	ns	1
t_{337a}	A setup to QCLK (positive edge)	5.3	-	6.8	-	ns	-
t_{337b}	CSPCI_ setup to QCLK (positive edge)	3.4	-	4.4	-	ns	-
t_{337c}	CSREG_ setup to QCLK (positive edge)	5.3	-	6.8	-	ns	-
t_{337d}	R/W_ setup to QCLK (positive edge)	3.6	-	4.6	-	ns	-
t_{337e}	SIZ setup to QCLK (positive edge)	4.9	-	6.3	-	ns	-
t_{337f}	TC setup to QCLK (positive edge)	5	-	7.1	-	ns	-
t_{337g}	TS_ setup to QCLK (positive edge)	3.7	-	4.7	-	ns	-
t_{350}	DREQ_ asserted (or negated) from QCLK (positive edge)	3.7	9.2	4.8	11.8	ns	2
t_{351}	D asserted (valid) from SDACK_ (negative edge)		10.8	-	13.9	ns	1,3

© 2019 Renesas Electronics Corporation

Table 155: Timing Parameters for MPC860 Interface *(Continued)*

Timing Parameter	Description	Frequency/Temperature Options				Units	Note
		50Cx/50Ix		40Cx			
		Min	Max	Min	Max		
t_{352}	D tristated from TA_ (positive edge)	4.1	12.4	5.3	15.9	ns	3
t_{353a}	CSPCI_ setup to QCLK (positive edge)	3.5	-	4.4	-	ns	-
t_{353b}	TS_ setup to QCLK (positive edge)	4.1	-	5.2	-	ns	-
t_{354}	SDACK_ setup to QCLK (positive edge)	0	-	0	-	ns	-
t_{355a}	TA_ setup to QCLK (positive edge)	3.1	-	3.9	-	ns	-
t_{355b}	TEA_ setup to QCLK (positive edge)	3.5	-	4.5	-	ns	-
t_{356}	TRETRY_ setup to QCLK (positive edge)	3.1	-	4	-	ns	-
t_{357a}	TA_ asserted to SDACK_ (positive edge)	2	-	2	-	ns	-
t_{357b}	TEA_ asserted to SDACK_ (positive edge)	2	-	2	-	ns	-
t_{357c}	TRETRY_ asserted to SDACK_ (positive edge)	2	-	2	-	ns	-
t_{359a}	CSPCI_ hold from QCLK (positive edge)	0.8	-	1	-	ns	-
t_{359b}	D hold from QCLK (positive edge)	1.6	-	2	-	ns	-
t_{359c}	SDACK_ hold from QCLK (positive edge)	0	-	0	-	ns	-
t_{359d}	TA_ hold from QCLK (positive edge)	0.7	-	0.8	-	ns	-
t_{359e}	TEA_ hold from QCLK (positive edge)	0	-	0	-	ns	-
t_{359f}	TRETRY_ hold from QCLK (positive edge)	0	-	0	-	ns	-
t_{359g}	TS_ hold from QCLK (positive edge)	0.2	-	0.2	-	ns	-
t_{360}	TC setup to QCLK (positive edge)	5.0	-	7.1	-	-	-
t_{361}	TC hold from QCLK (positive edge)	0.4	-	0.4	-	-	-

1. Minimum output hold time specified for load of 10 pF. Maximum output delay specified for load of 50 pF.
2. Minimum output hold time specified for load of 10 pF. Maximum output delay specified for load of 35 pF.
3. QSpan II's DP[3:0] signals have the same timing as the data bus (D[31:0]).

© 2019 Renesas Electronics Corporation

Table 156: Timing Parameters for M68040 Interface

Timing Parameter	Description	40Cx		Units	Note
		Min	Max		
t_{400}	QCLK Frequency	-	40	MHz	-
t_{401}	Period	25	-	ns	-
t_{402}	Clock Pulse Width (Low)	12	-	ns	3
t_{404}	Clock Pulse Width (High)	10	-	ns	3
t_{405}	Clock Rise Time (t_r)	-	3	ns	-
t_{406}	Clock Fall Time (t_f)	-	3	ns	-
t_{409a}	TA_ tristated from QCLK (negative edge)	-	11.4	ns	-
t_{409b}	TEA_, tristated from QCLK (negative edge)	-	10.4	ns	-
t_{410a}	A asserted from QCLK (positive edge)	-	10.7	ns	1
t_{410b}	BB_ asserted from QCLK (positive edge)	-	9.8	ns	1
t_{410c}	R/W_ asserted from QCLK (positive edge)	-	8.9	ns	1
t_{410d}	SIZ asserted from QCLK (positive edge)	-	8.8	ns	1
t_{410e}	TA_ asserted from QCLK (positive edge)	-	11.4	ns	1
t_{410f}	TC asserted from QCLK (positive edge)	-	9.3	ns	1
t_{410g}	TEA_ asserted from QCLK (positive edge)	-	11.9	ns	1
t_{410h}	BURST_/TIP_ asserted from QCLK (positive edge)	-	9.6	ns	1
t_{410i}	TS_ asserted from QCLK (positive edge)	-	9.4	ns	1
t_{411}	BR_ asserted from QCLK (positive edge)	3.6	8.2	ns	2
t_{412a}	BB_ tristated from QCLK (negative edge)	-	10.2	ns	-
t_{412b}	TS_ tristated from QCLK (negative edge)	-	9.6	ns	-
t_{413a}	BB_ setup to QCLK (positive edge)	5.8	-	ns	-
t_{413b}	BG_ setup to QCLK (positive edge)	6.0	-	ns	-
t_{413c}	D setup to QCLK (positive edge)	7.7	-	ns	-
t_{413d}	IMSEL setup to QCLK (positive edge)	5.0	-	ns	-
t_{413e}	TA_ setup to QCLK (positive edge)	7.0	-	ns	-
t_{413f}	TEA_ setup to QCLK (positive edge)	7.6	-	ns	-
t_{413g}	BURST_/TIP_ setup to QCLK (positive edge)	5.6	-	ns	-

© 2019 Renesas Electronics Corporation

Table 156: Timing Parameters for M68040 Interface *(Continued)*

Timing Parameter	Description	40Cx		Units	Note
		Min	Max		
t_{414}	D valid from QCLK (positive edge) (master writes)	4.3	10.9	ns	1
t_{415a}	A hold from QCLK (positive edge)	0.8	-	ns	-
t_{415b}	BB_ hold from QCLK (positive edge)	0	-	ns	-
t_{415c}	BG_ hold from QCLK (positive edge)	0	-	ns	-
t_{415d}	BURST_/TIP_ hold from QCLK (positive edge)	0.6	-	ns	-
t_{415e}	CSPCI_ hold from QCLK (positive edge)	0.5	-	ns	-
t_{415f}	CSREG_ hold from QCLK (positive edge)	0.6	-	ns	-
t_{415g}	D hold from QCLK (positive edge)	2.0	-	ns	-
t_{415h}	IMSEL hold from QCLK (positive edge)	0.0	-	ns	-
t_{415i}	R/W_ hold from QCLK (positive edge)	0.7	-	ns	-
t_{415j}	SIZ hold from QCLK (positive edge)	1.1	-	ns	-
t_{415k}	TA_ hold from QCLK (positive edge)	0.2	-	ns	-
t_{415l}	TC hold from QCLK (positive edge)	2.2	-	ns	-
t_{415m}	TEA_ hold from QCLK (positive edge)	0.4	-	ns	-
t_{415n}	TRETRY_ hold from QCLK (positive edge)	0.3	-	ns	-
t_{415o}	TS_ hold from QCLK (positive edge)	0.8	-	ns	-
t_{416}	D tristated from QCLK (positive edge)	4.3	15.2	ns	-
t_{417}	D valid from QCLK (positive edge) (slave reads)	-	12.2	ns	1
t_{418}	D hold from QCLK (positive edge)	3.9	-	ns	-
t_{419a}	A setup to QCLK (positive edge)	6.8	-	ns	-
t_{419b}	CSPCI_ setup to QCLK (positive edge)	4.4	-	ns	-
t_{419c}	CSREG_ setup to QCLK (positive edge)	6.8	-	ns	-
t_{419d}	R/W_ setup to QCLK (positive edge)	4.6	-	ns	-
t_{419e}	SIZ setup to QCLK (positive edge)	6.3	-	ns	-
t_{419f}	TC setup to QCLK (positive edge)	6.4	-	ns	-
t_{419g}	TS_ setup to QCLK (positive edge)	4.7	-	ns	-
t_{436a}	A negated from QCLK (positive edge)	-	10.7	ns	1
t_{436b}	BB_ negated from QCLK (positive edge)	-	7.8	ns	1

© 2019 Renesas Electronics Corporation

Table 156: Timing Parameters for M68040 Interface *(Continued)*

Timing Parameter	Description	40Cx		Units	Note
		Min	Max		
t_{436c}	R/W_ negated from QCLK (positive edge)	-	8.8	ns	1
t_{436d}	SIZ negated from QCLK (positive edge)	-	7.8	ns	1
t_{436e}	TA_ negated from QCLK (positive edge)	4.3	11.4	ns	1
t_{436f}	TC negated from QCLK (positive edge)	-	9.3	ns	1
t_{436g}	TEA_ negated from QCLK (positive edge)	4.1	11.3	ns	1
t_{436h}	BURST_/TIP_ negated from QCLK (positive edge)	-	9.9	ns	1
t_{436i}	TS_ negated from QCLK (positive edge)	-	7.9	ns	1

1. Minimum output hold time specified for load of 10 pF. Maximum output delay specified for load of 50 pF.
2. Minimum output hold time specified for load of 10 pF. Maximum output delay specified for load of 35 pF.
3. Measured at 1.5 volts.

© 2019 Renesas Electronics Corporation

Table 157: Timing Parameters for Interrupts and Resets

Timing Parameter	Description	3.3V		Units	Note
		Min	Max		
t_{001}	RST# asserted to RESETO_ asserted	-	10.8	ns	-
t_{002}	RST# negated to RESETO_ tristated	-	10.8	ns	-
t_{003}	RESETO_ asserted from PCLK (rising edge)	-	10.1	ns	-
t_{004}	RESETO_ tristated from PCLK (rising edge)	-	10.1	ns	-
t_{005}	QINT_ asserted from PCLK (rising edge)	-	10.7	ns	-
t_{006}	QINT_ tristated from PCLK (rising edge)	-	10.7	ns	-

Table 158: Timing Parameters for Reset Options

Timing Parameter	Description	All Parts		Units	Note
		Min	Max		
t_{007}	SIZ[1] setup to RESETI_ or RST# (rising edge)	1	-	ns	1
t_{008}	TMODE[1] setup to RESETI_ or RST# (rising edge)	2.5	-	ns	1
t_{009}	TMODE[0] setup to RESETI_ or RST# (rising edge)	2.5	-	ns	1
t_{010}	BDIP_ setup to RESETI_ or RST# (rising edge)	2.0	-	ns	1
t_{011}	BM_EN setup to RESETI_ or RST# (rising edge)	1.5	-	ns	1
t_{012}	SDA setup to RESETI_ or RST# (rising edge)	2.25	-	ns	1
t_{013}	SIZ[1] hold from RESETI_ or RST# (rising edge)	1.75	-	ns	1
t_{014}	TMODE[1] hold from RESETI_ or RST# (rising edge)	2.75	-	ns	1
t_{015}	TMODE[0] hold from RESETI_ or RST# (rising edge)	2.75	-	ns	1
t_{016}	BDIP hold from RESETI or RST# (rising edge)	2.0	-	ns	1
t_{017}	BM_EN hold from RESETI_ or RST# (rising edge)	1.5	-	ns	1
t_{018}	SDA hold from RESETI_ or RST# (rising edge)	2.75	-	ns	1
t_{019a}	RST# or RESETI_ pulse width (asserted) @ 25MHz	40	-	ns	-
t_{019b}	RST# or RESETI_ pulse width (asserted) @ 33MHz	30	-	ns	-
t_{019c}	RST# or RESETI_ pulse width (asserted) @ 50MHz	20	-	ns	-
t_{020}	ENID setup to RESETI_ or RST# (rising edge)	2.5	-	ns	-
t_{021}	ENID hold from RESETI_ or RST# (rising edge)	2.75	-	ns	-
t_{022}	PCI_DIS setup to RESETI_ or RST# (rising edge)	2.5	-	ns	-

© 2019 Renesas Electronics Corporation

Table 158: Timing Parameters for Reset Options *(Continued)*

Timing Parameter	Description	All Parts		Units	Note
		Min	Max		
t_{023}	PCI_DIS hold from RESETI_ or RST# (rising edge)	2.75	-	ns	-
t_{024}	PCI_ARB_EN setup to RESETI_ or RST# (rising edge)	2.5	-	ns	-
t_{025}	PCI_ARB_EN hold from RESETI_ or RST# (rising edge)	2.75	-	ns	-

1. These setup and hold times also apply to the falling edge of HS_HEALTHY_.

B.3 Wait State Insertion — QBus Slave Module

The following wait-state list does not apply to IDMA transfers.

QSpan II as QBus slave inserts wait states as follows:

- One wait state for all retried cycles
- One wait state for burst writes
- One wait states for single posted writes
- Two wait states for complete delayed reads and writes
- One wait state for complete delayed burst reads

See the following section for register accesses.

When the QBus processor is accessing the QSpan II's registers, the maximum number of retries the QSpan II asserts is two. The minimum response time for successful (non-retried) QBus accesses from TS_ (or AS_) asserted to TA_ (or DSACKx_) asserted is three QCLKs (including two wait states) for reads, and six for writes.

Use Figure 24 when reading the timing diagrams in this Appendix.

© 2019 Renesas Electronics Corporation

B.4 Timing Diagrams

B.4.1 QBus Interface — MC68360

Figure 25: QCLK Input Timing — MC68360 CLKO1

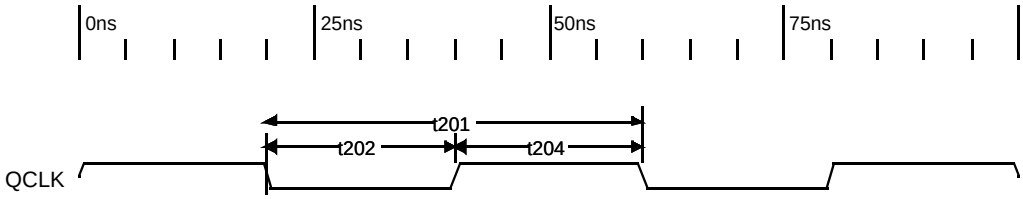

The timing parameters t005 and t006 are measured between 0.8 and 2 Volts. The timing parameters t005 and t006 can be found in Table 154 on page 301.

B.4.2 QBus Master Cycles — MC68360

Figure 26: QBus Arbitration — MC68360

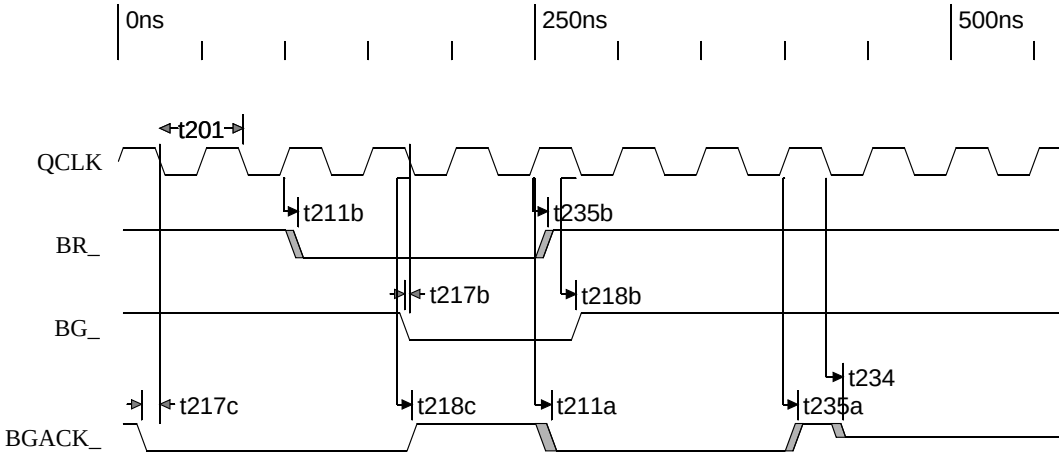

This figure depicts timing in the case where the QSpan II requests ownership of the QBus while another QBus master currently owns the bus (BB_/BGACK_ asserted by the other master). QSpan II obtains ownership of the bus after the other master negates BB_/BGACK_.

© 2019 Renesas Electronics Corporation

Figure 27: Single Read — QSpan II as MC68360 Master

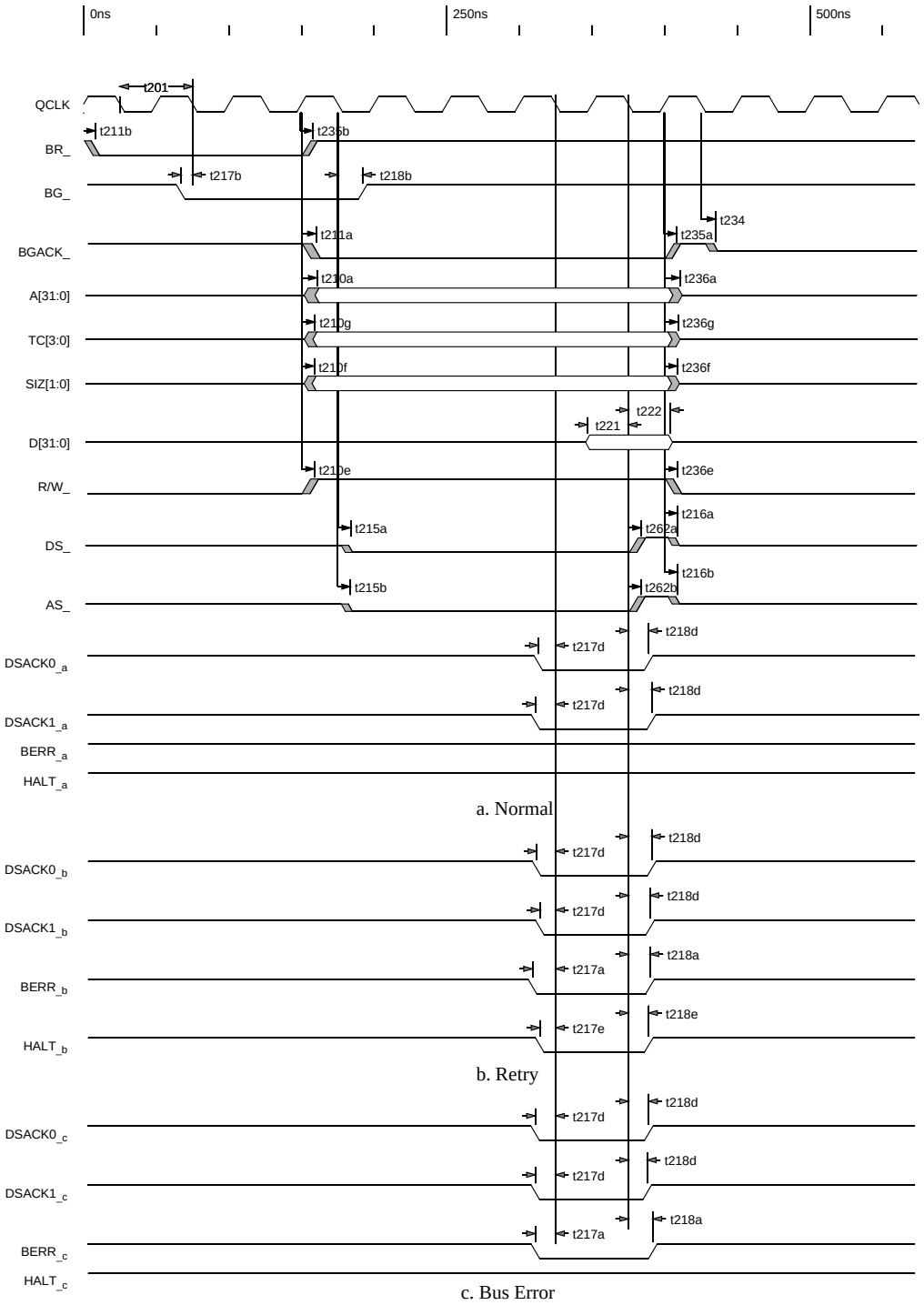

Wait states are not required by the QSpan II.

© 2019 Renesas Electronics Corporation

Figure 28: Single Write — QSpan II as MC68360 Master

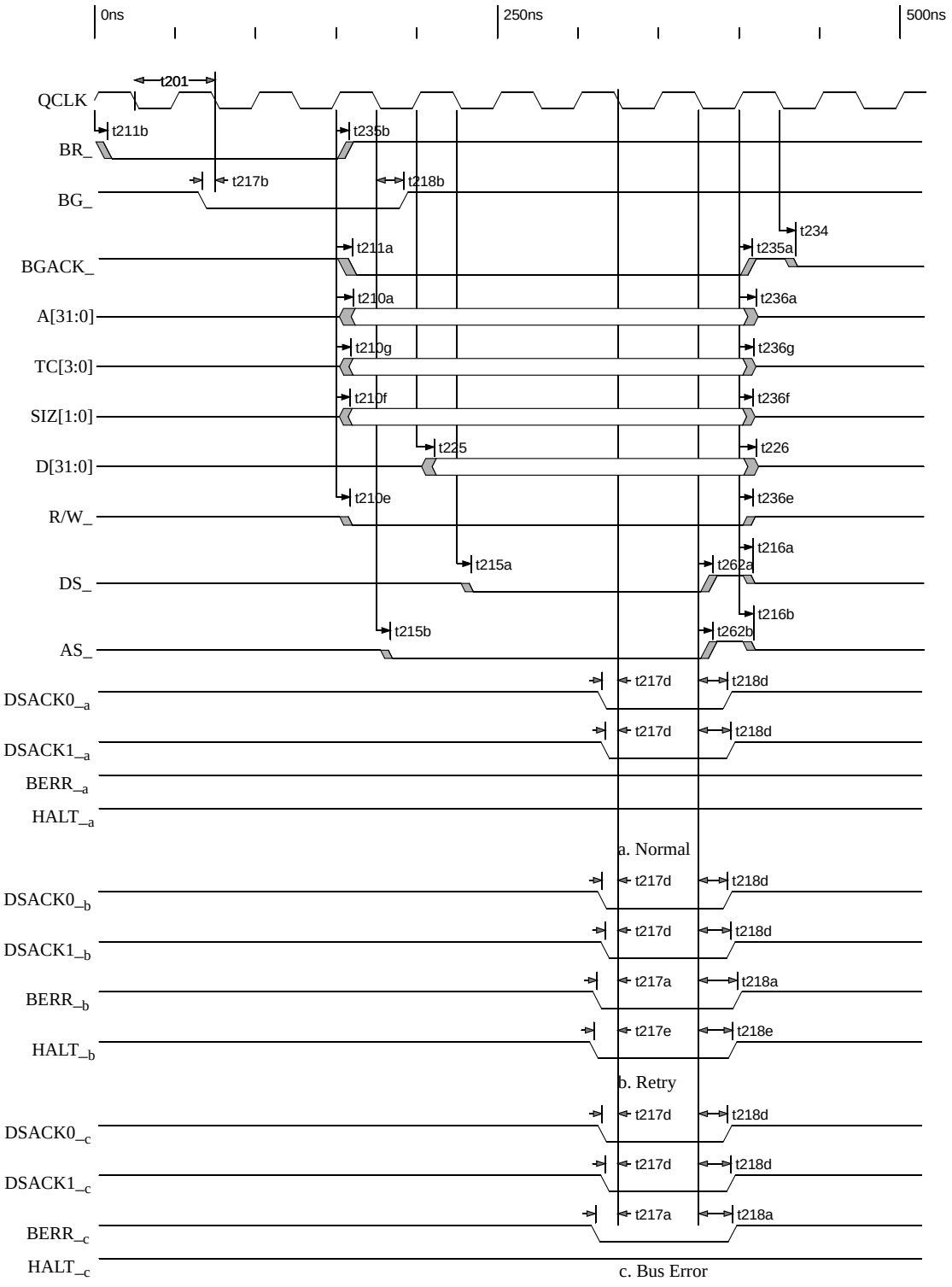

Wait states are not required by the QSpan II.

© 2019 Renesas Electronics Corporation

B.4.2.1 QBus Slave Cycles — MC68360

Figure 29: Delayed Single Read — QSpan II as MC68360 Slave

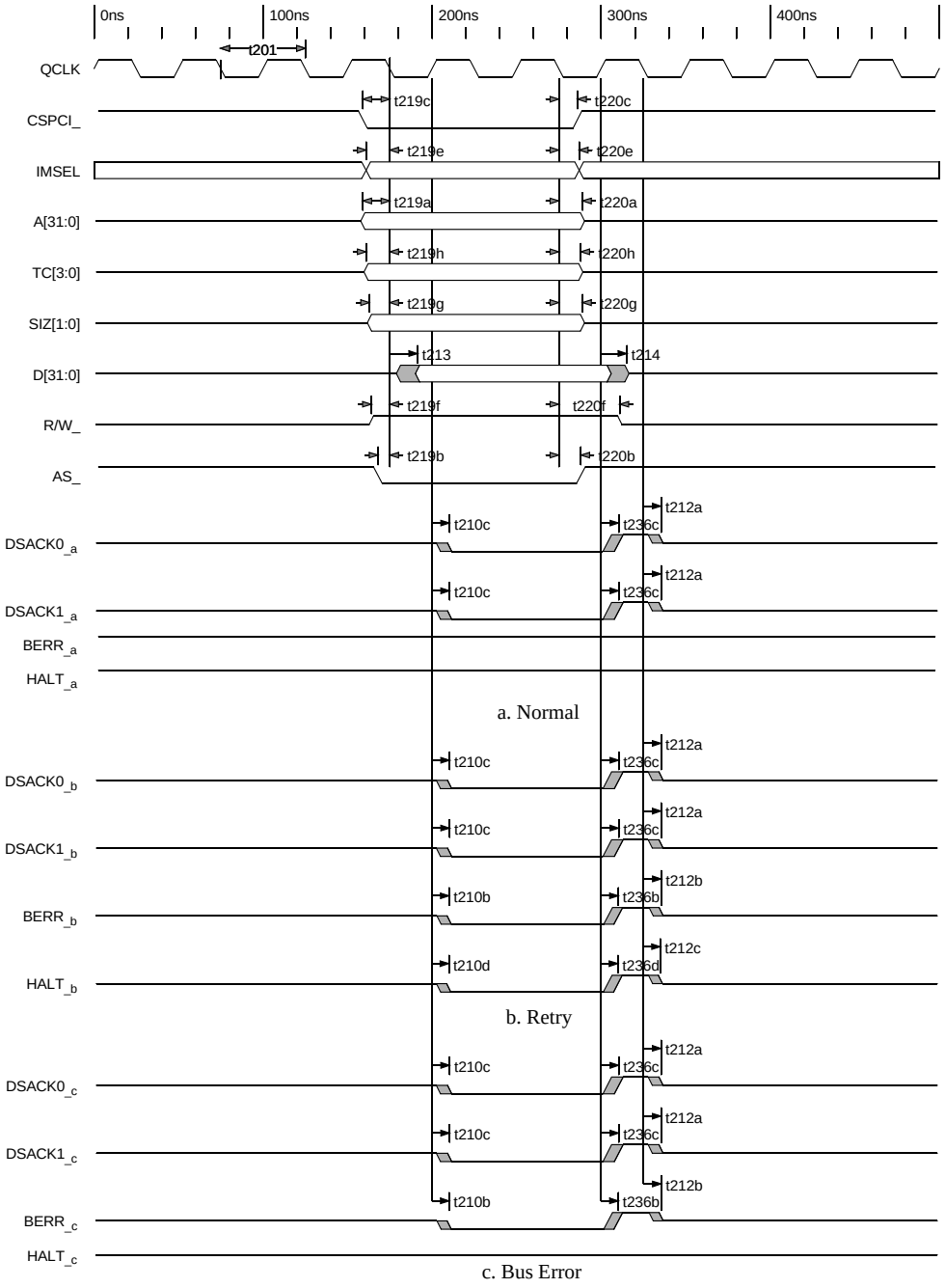

© 2019 Renesas Electronics Corporation

Figure 30: Single Write — QSpan II as MC68360 Slave

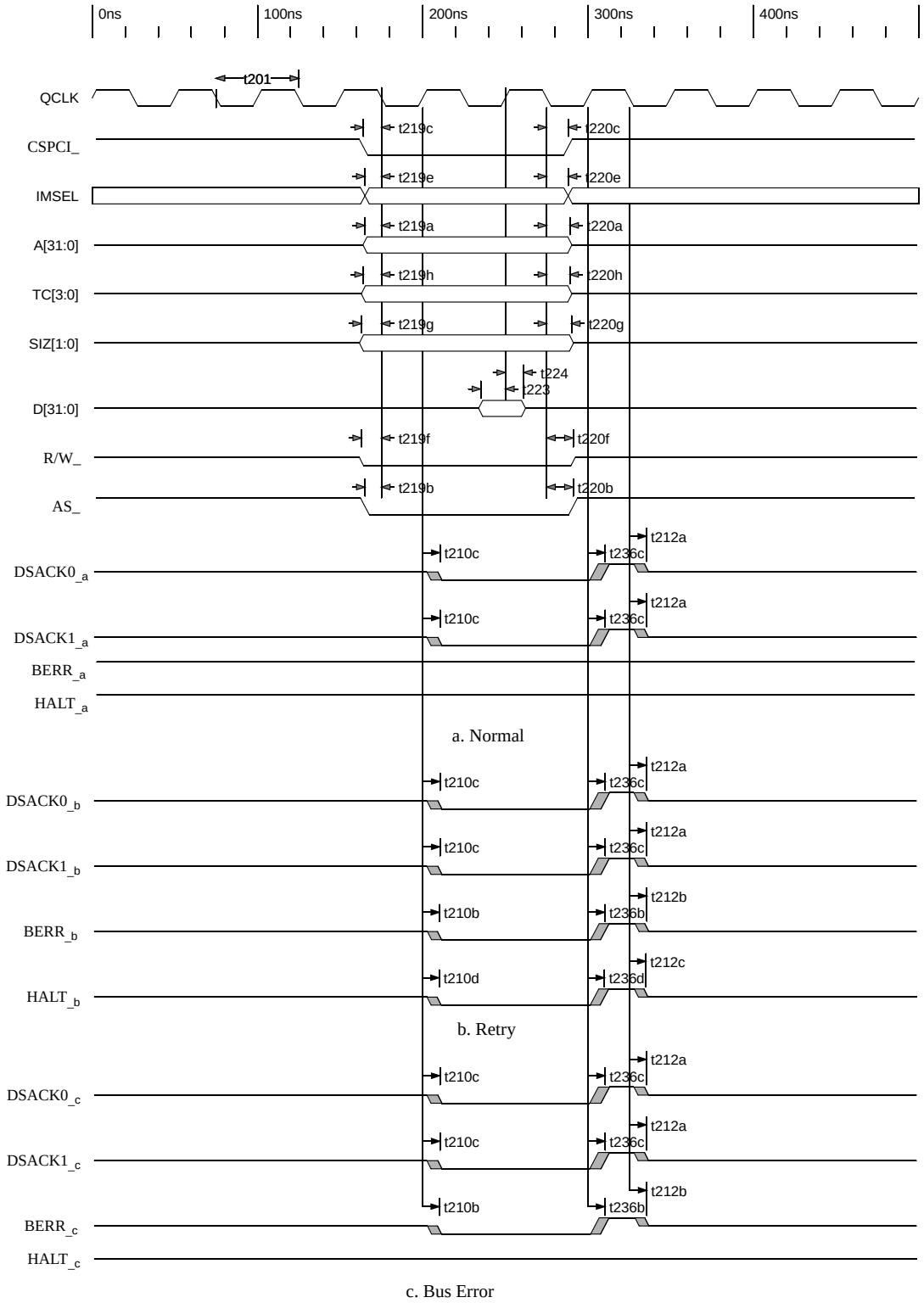

© 2019 Renesas Electronics Corporation

Figure 31: Register Read — QSpan II as MC68360 Slave

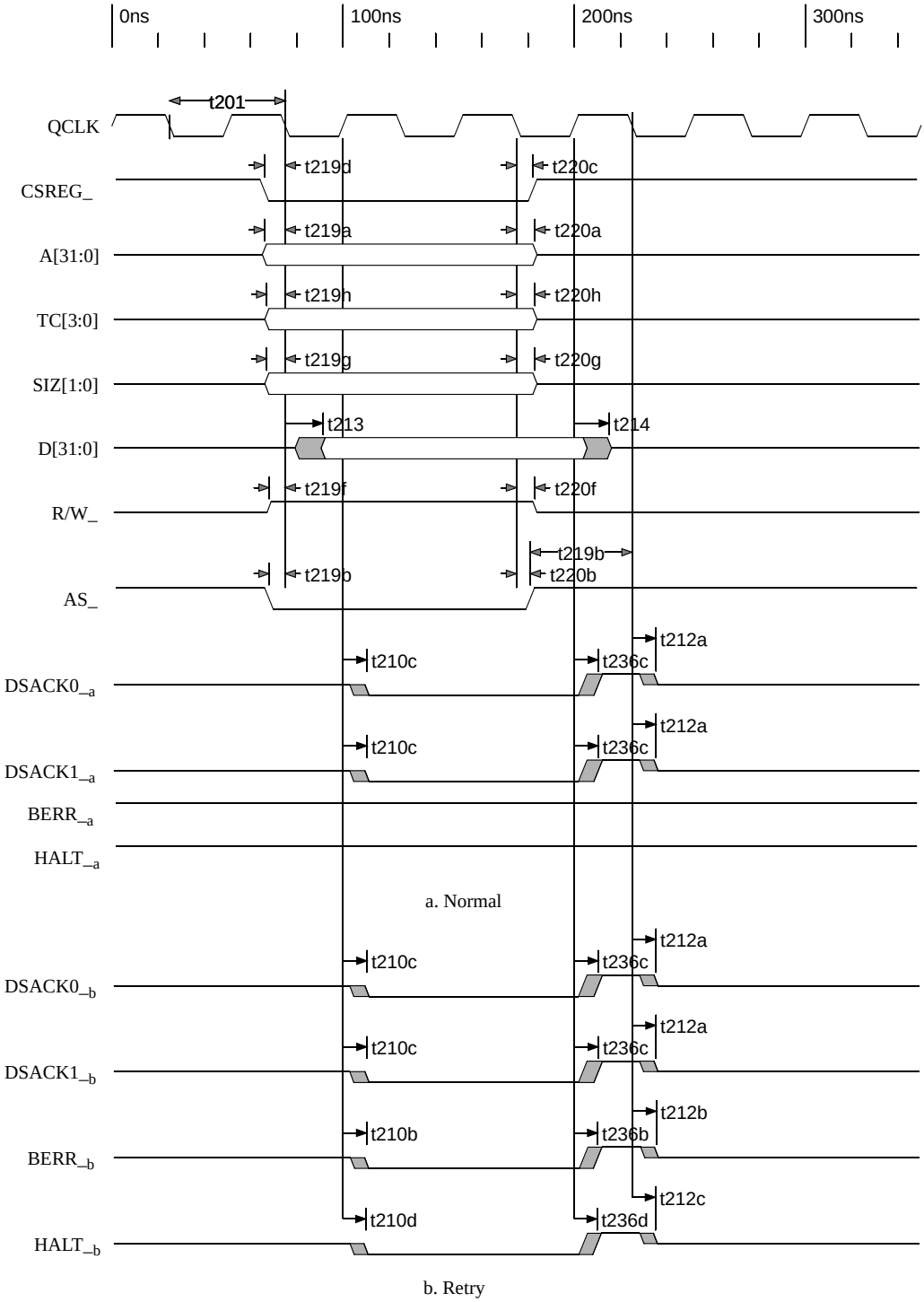

© 2019 Renesas Electronics Corporation

Figure 32: Register Write — QSpan II as MC68360 Slave

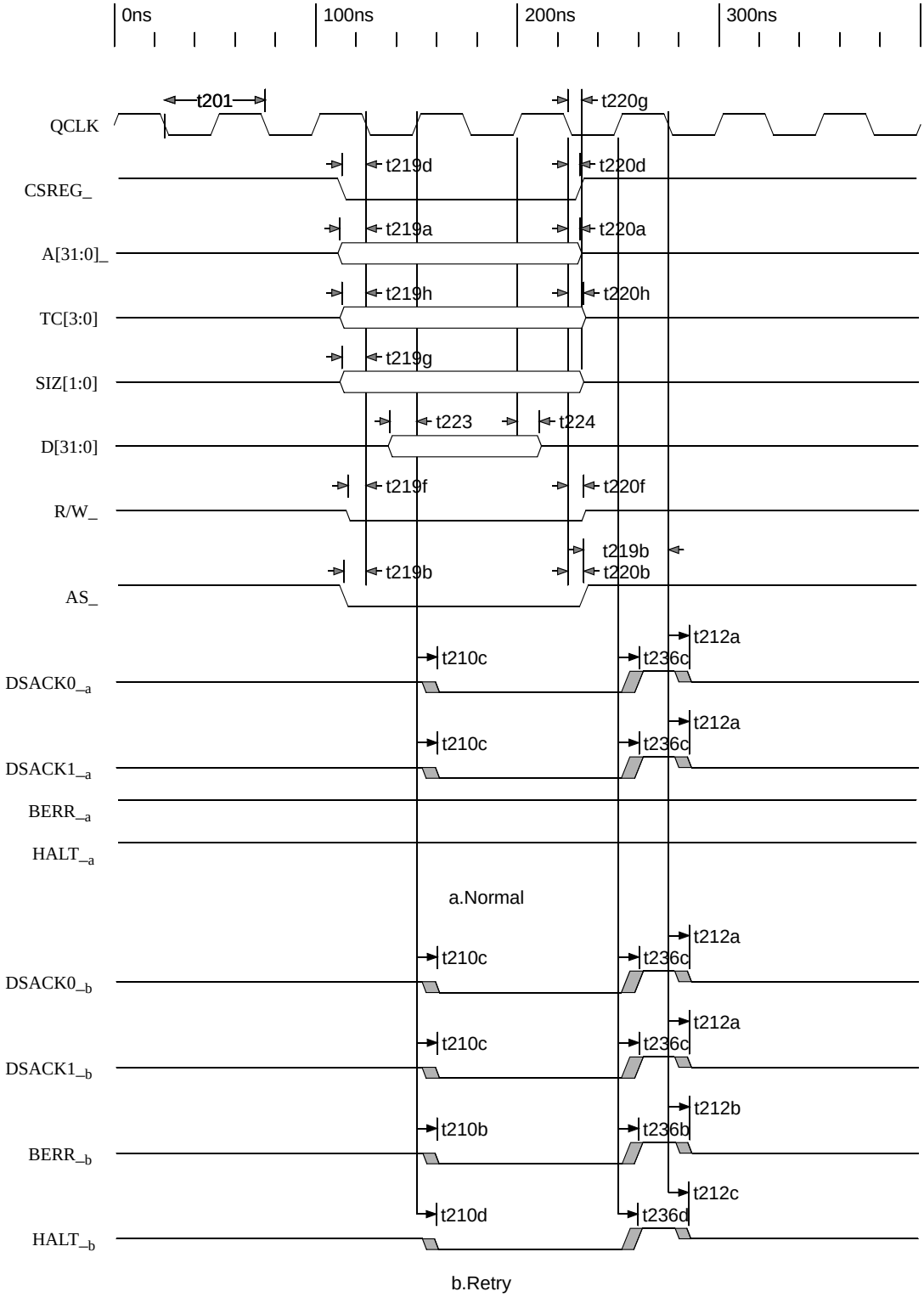

© 2019 Renesas Electronics Corporation

B.4.2.2 QBus IDMA Cycles — MC68360

Figure 33: MC68360 DREQ_ Timing

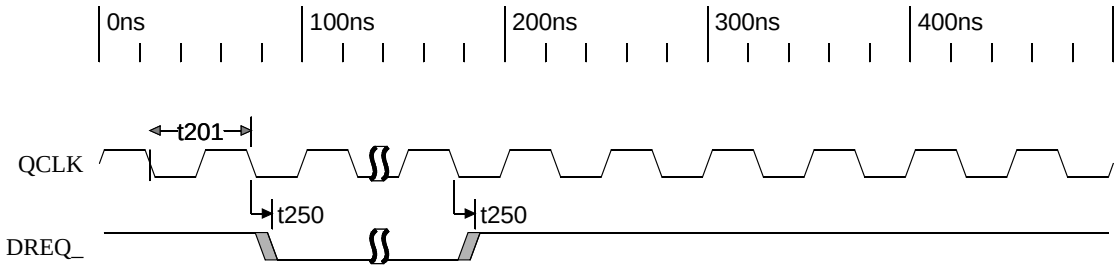

Table 159: Direction[a] of QBus Signals During MC68360 IDMA Cycles

Signal	Single Address		Dual Address	
	Standard Termination	Fast Termination	Standard Termination	Fast Termination
CSPCI_	I (negated)	I (negated)	I (asserted)	I (asserted)
AS_	I	I	I	I
D	I (write)/O (read)	I (write)/O (read)	I (write)/O (read)	I (write)/O (read)
DACK_	I	I	I	I
DONE_	I	I	I	I
DREQ_	O	O	O	O
DSACK0_[b]	I	N/A	O	N/A
DSACK1_	I	N/A	O	N/A
BERR_	I	N/A	N/A	N/A
HALT_	I	N/A	N/A	N/A

a. I = Input; O = Output; N/A = Not Applicable.

b. DSACK0_ is not applicable to IDMA transfers when the QBus is a 16-bit port.

Terminology

Standard termination is used in the following figures in contrast to *fast termination*. *Normal termination* as opposed to *abnormal terminations*, such as bus errors and retries. Thus, some standard terminations are abnormal terminations (for example, bus errors with non-fast termination).

© 2019 Renesas Electronics Corporation

Figure 34: MC68360 IDMA Read — Single Address, Standard Terminations

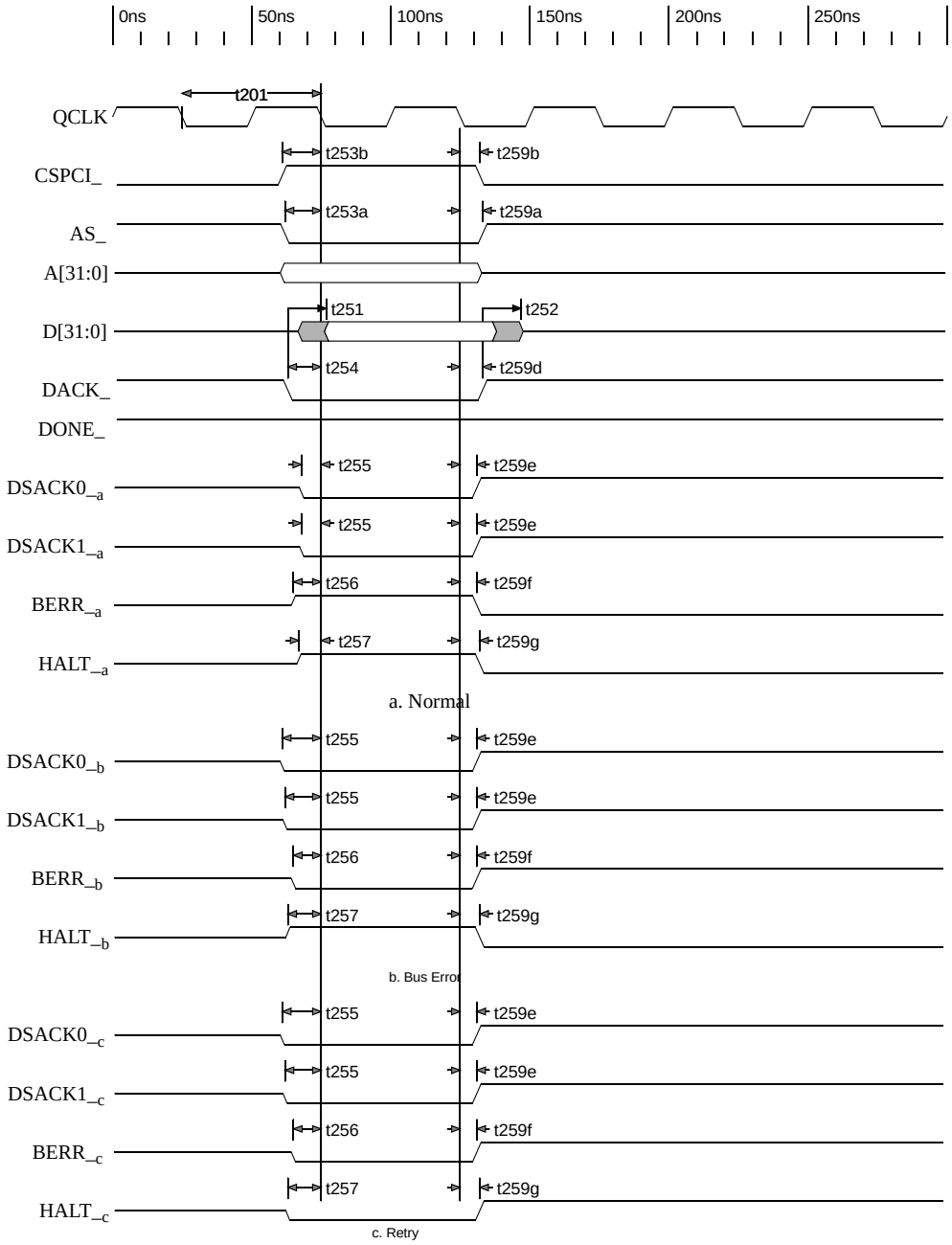

A[31:0] is depicted for completeness. It is not examined by the QSpan II during IDMA transfers; however, it can be used to drive CSPCI_. If the Port16 bit of IDMA_CS is disabled, DSACK0_ is not asserted. CSPCI_ is negated during single address IDMA cycles.

© 2019 Renesas Electronics Corporation

Figure 35: MC68360 IDMA Write — Single Address, Standard Terminations

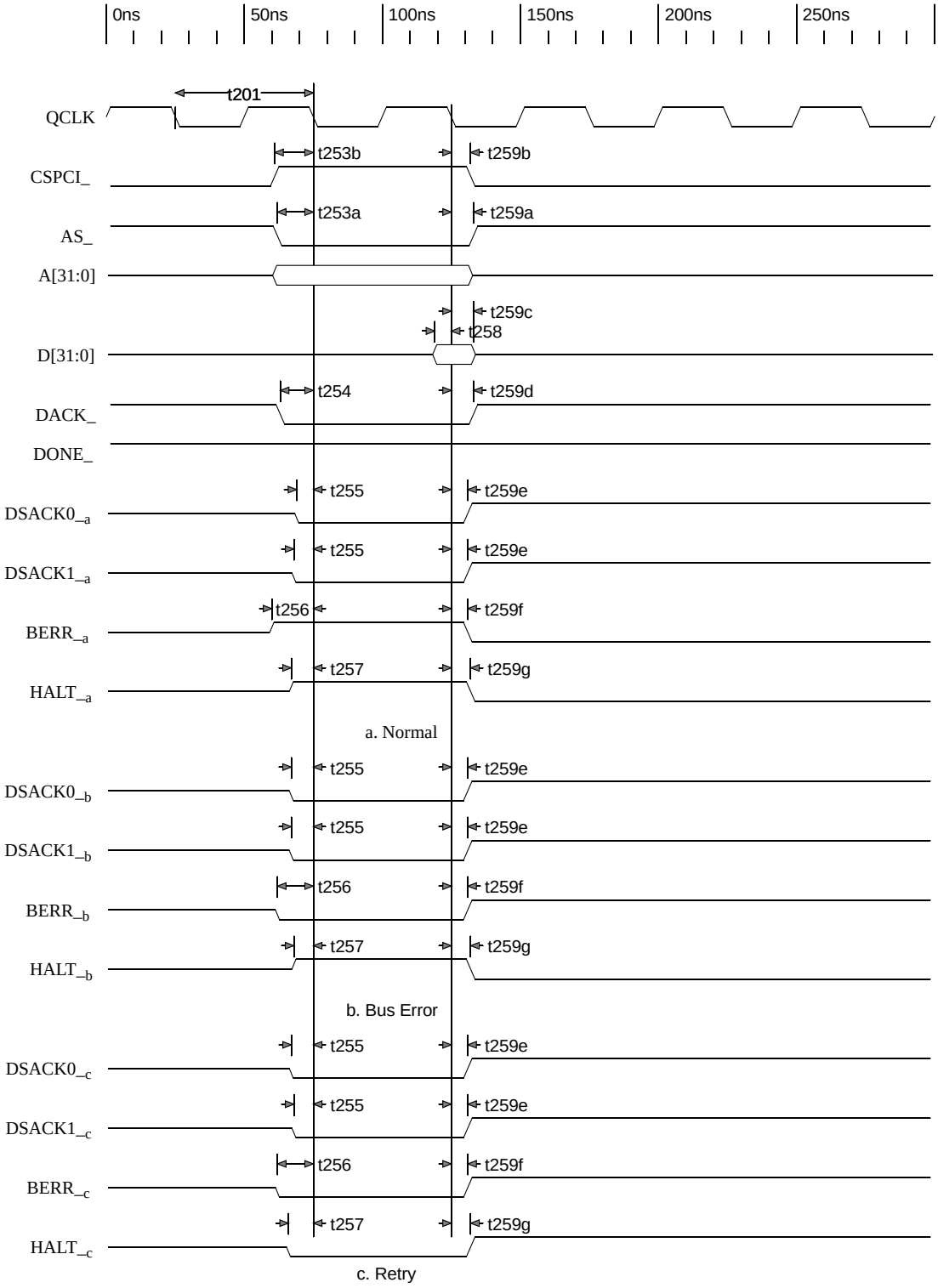

© 2019 Renesas Electronics Corporation

Figure 36: MC68360 IDMA Read — Single Address, Fast Termination

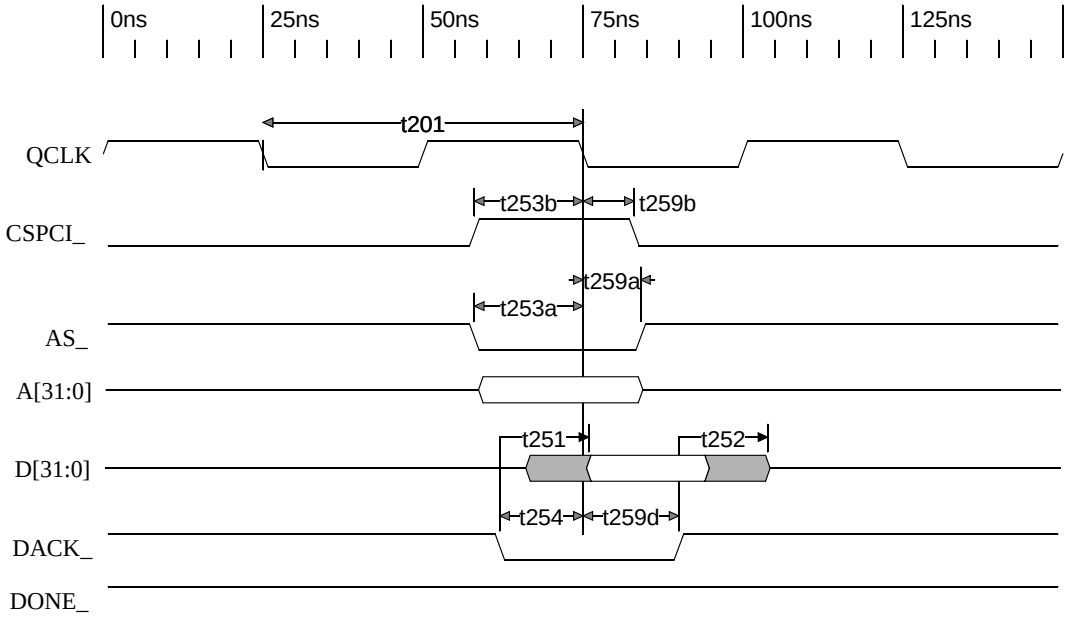

During IDMA fast termination cycles the maximum MC68360 QCLK frequency is 30 MHz.

Figure 37: MC68360 IDMA Write — Single Address, Fast Termination

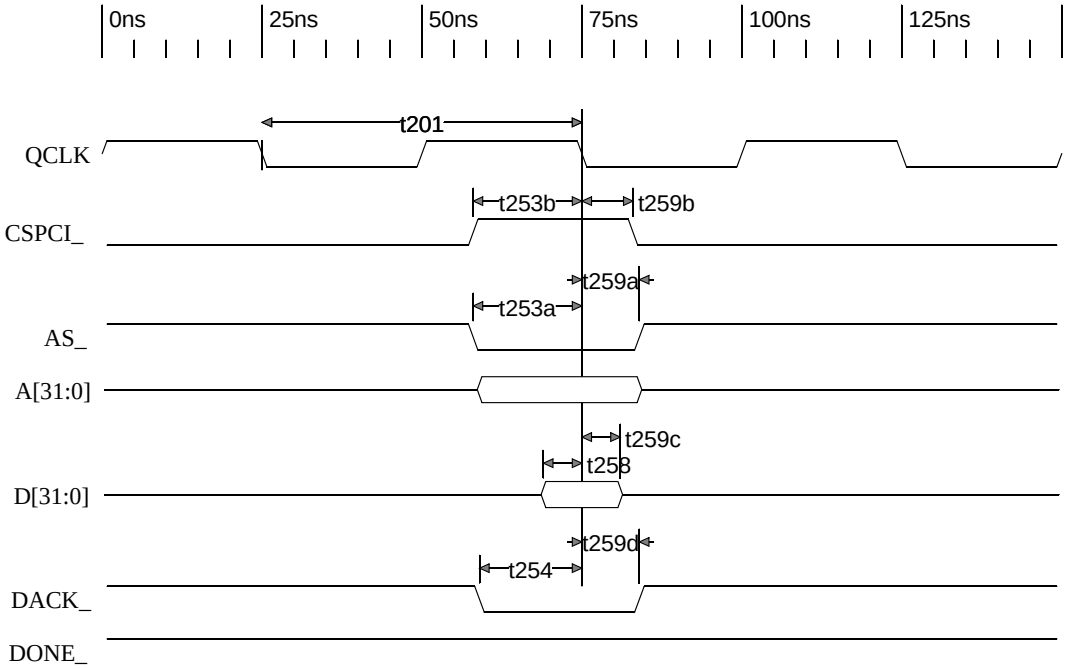

© 2019 Renesas Electronics Corporation

Figure 38: MC68360 IDMA Read — Dual Address, Standard Termination

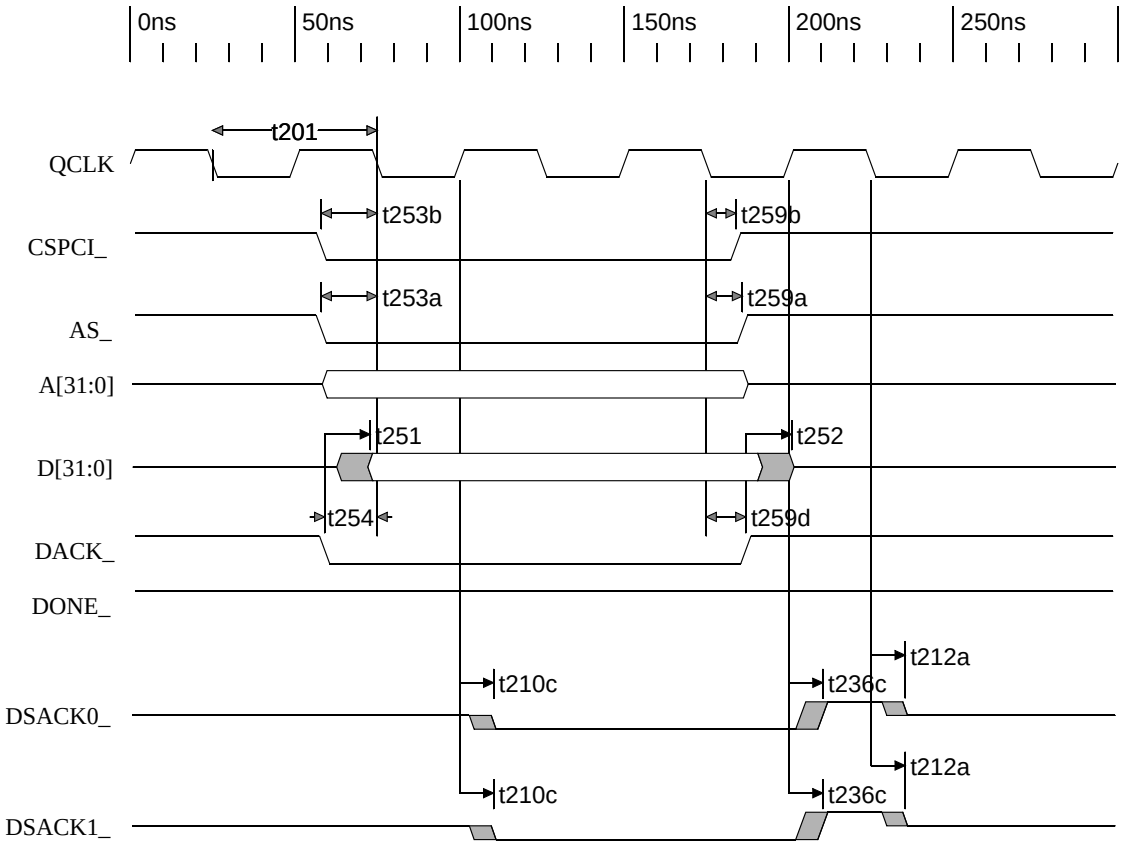

QSpan II does not issue retries or bus errors during dual address IDMA cycles.

© 2019 Renesas Electronics Corporation

Figure 39: MC68360 IDMA Write — Dual Address, Standard Termination

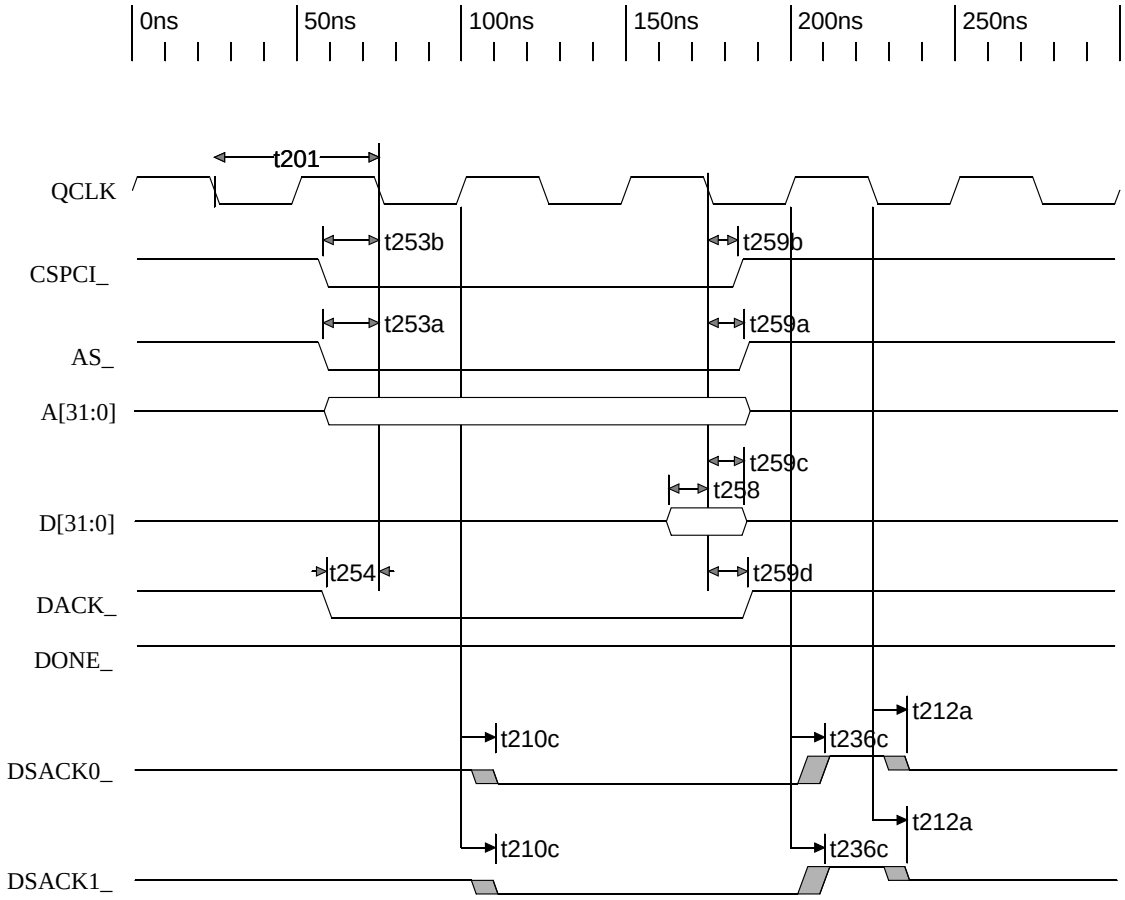

© 2019 Renesas Electronics Corporation

Figure 40: MC68360 IDMA Read — Dual Address, Fast Termination

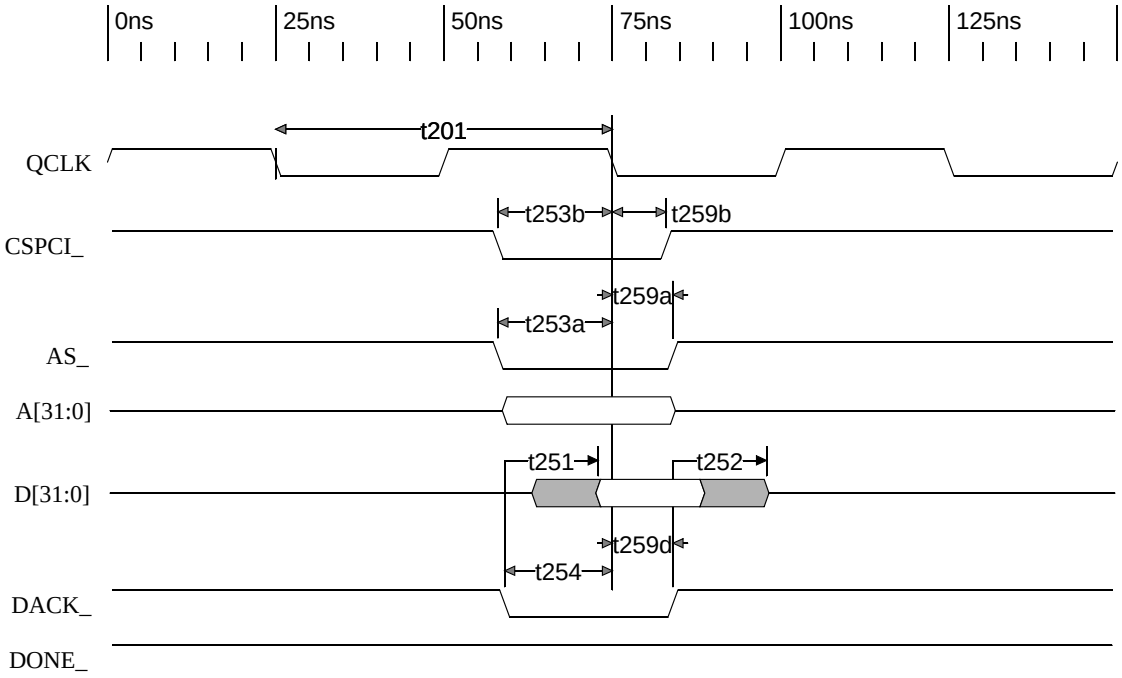

During IDMA fast termination cycles the maximum MC68360 QCLK frequency is 30 MHz.

© 2019 Renesas Electronics Corporation

Figure 41: MC68360 IDMA Read — Dual Address, Fast Termination

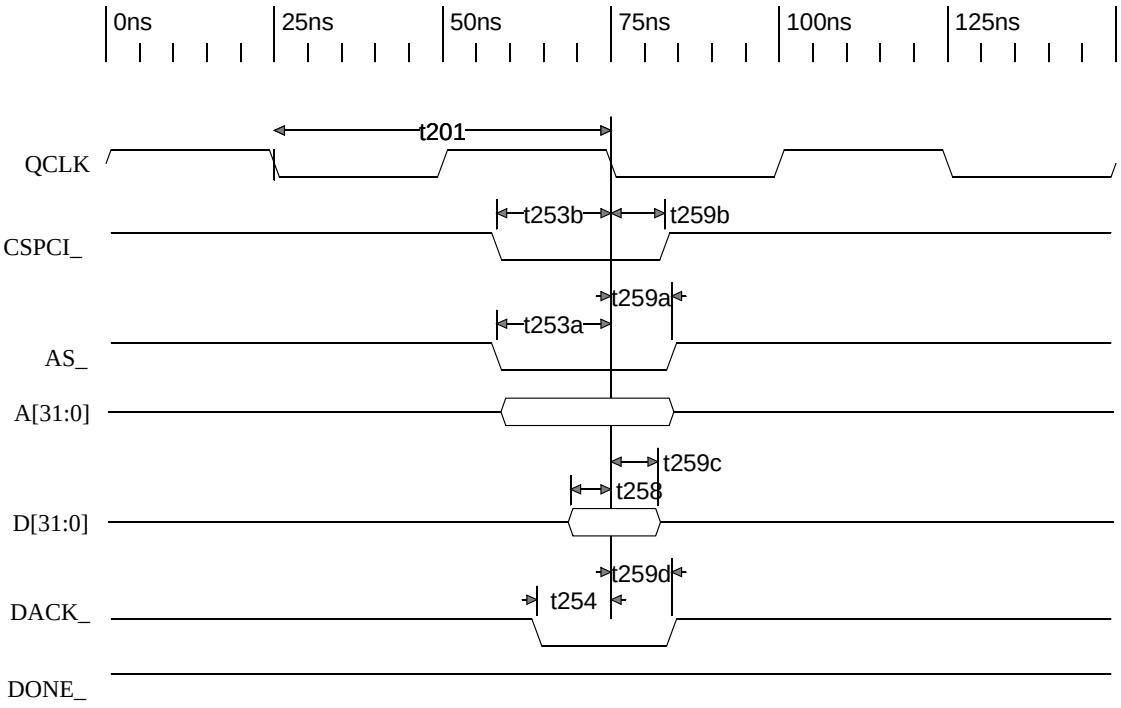

© 2019 Renesas Electronics Corporation

B.4.3 QBus Interface — MPC860

B.4.3.1 QBus Master Cycles — MPC860

Figure 42: QBus Arbitration — MPC860

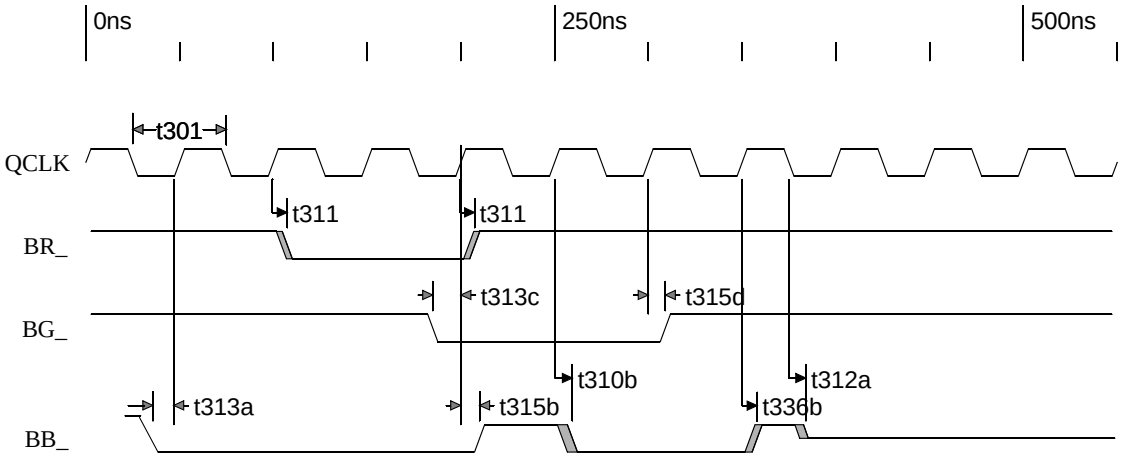

This figure depicts timing in the case where the QSpan II requests ownership of the QBus while another QBus master currently owns the bus (BB_/BGACK_ asserted by the other master). QSpan II obtains ownership of the bus after the other master negates BB_/BGACK_.

© 2019 Renesas Electronics Corporation

Figure 43: Single Read — QSpan II as MPC860 Master

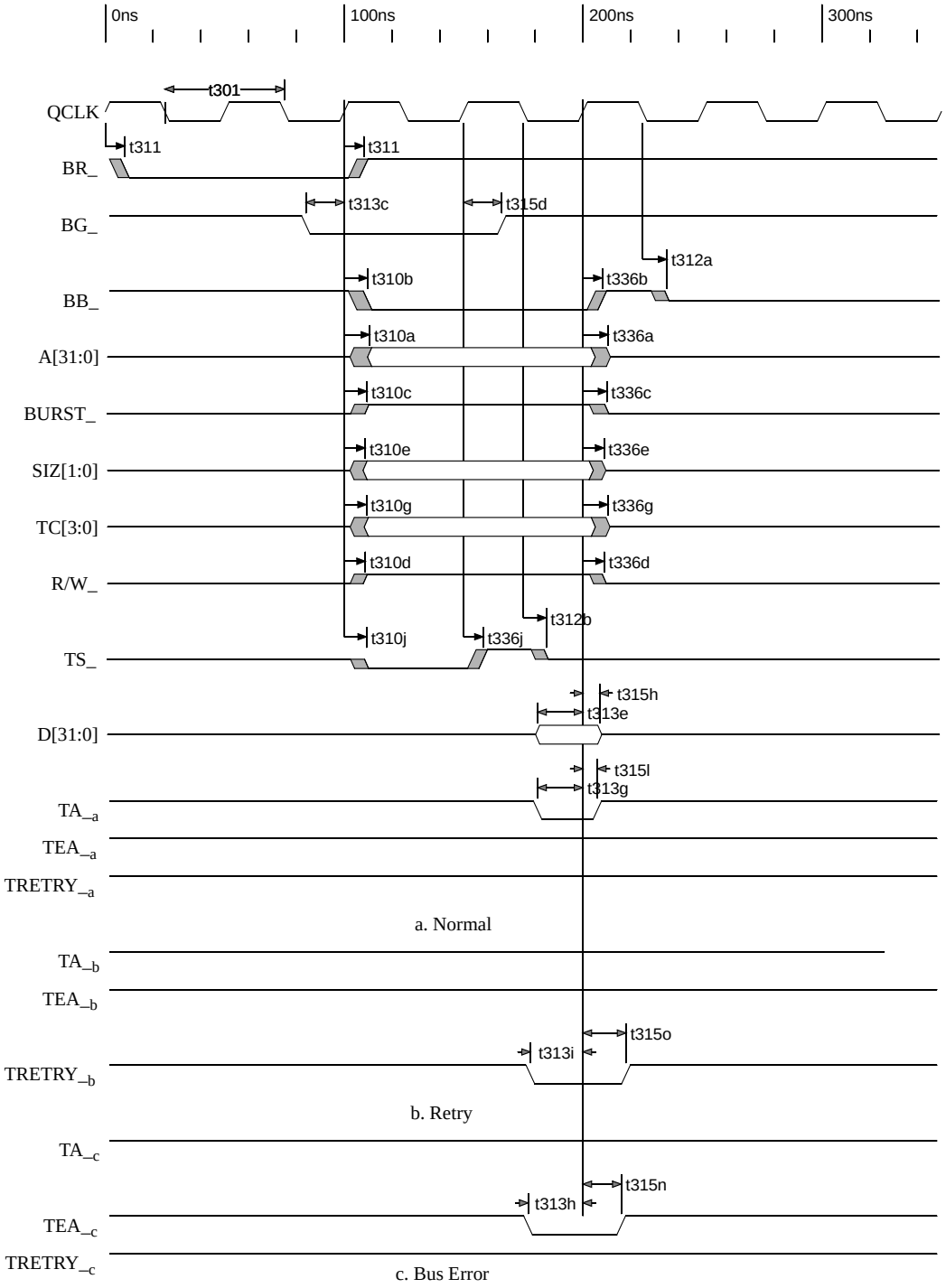

© 2019 Renesas Electronics Corporation

Figure 44: Single Write — QSpan II as MPC860 Master

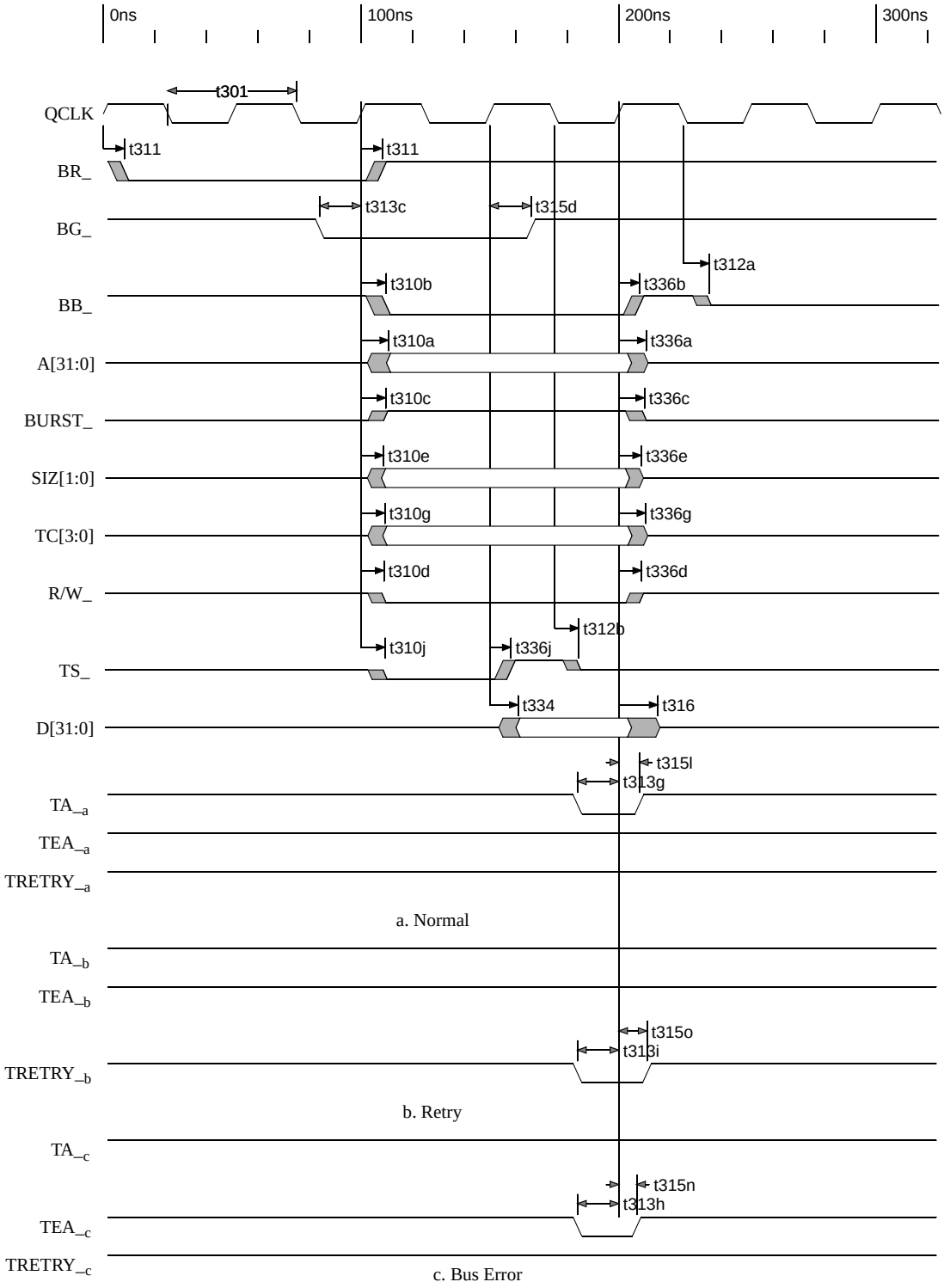

© 2019 Renesas Electronics Corporation

Figure 45: Burst Read — QSpan II as MPC860 Master

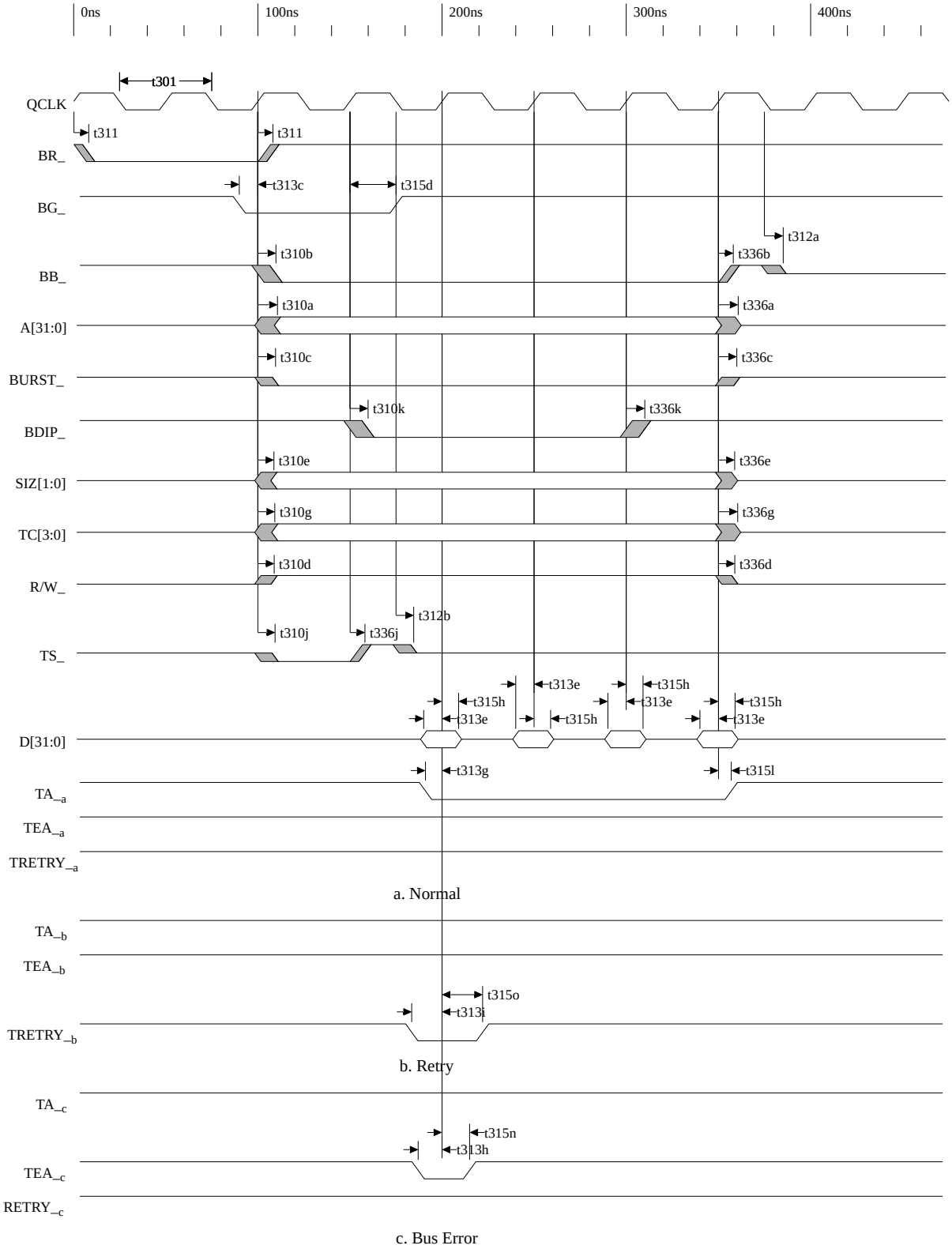

© 2019 Renesas Electronics Corporation

Figure 46: Aligned Burst Write — QSpan II as MPC860 Master

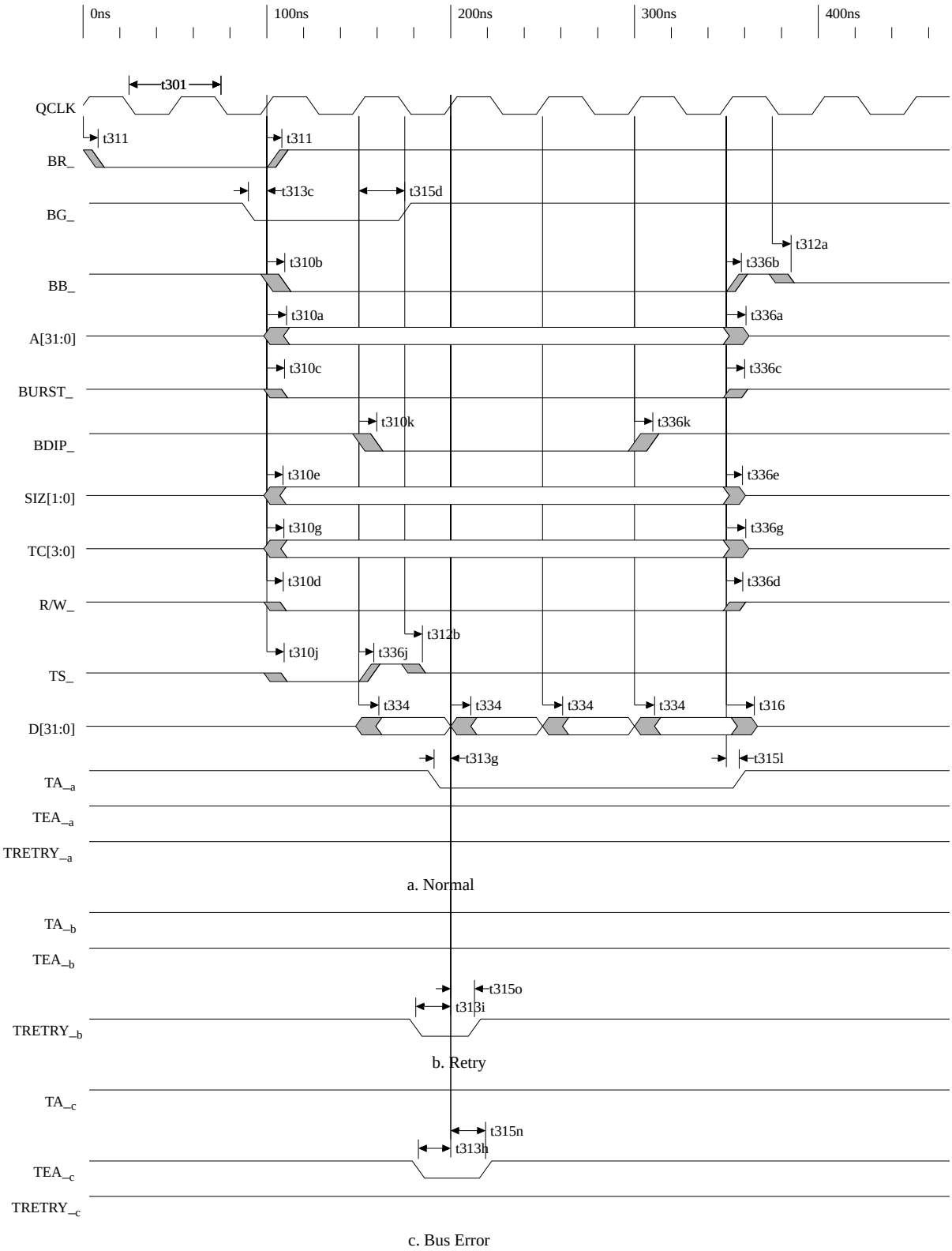

© 2019 Renesas Electronics Corporation

B.4.3.2 QBus Slave Cycle — MPC860

Figure 47: Single Read — QSpan II as MPC860 Slave

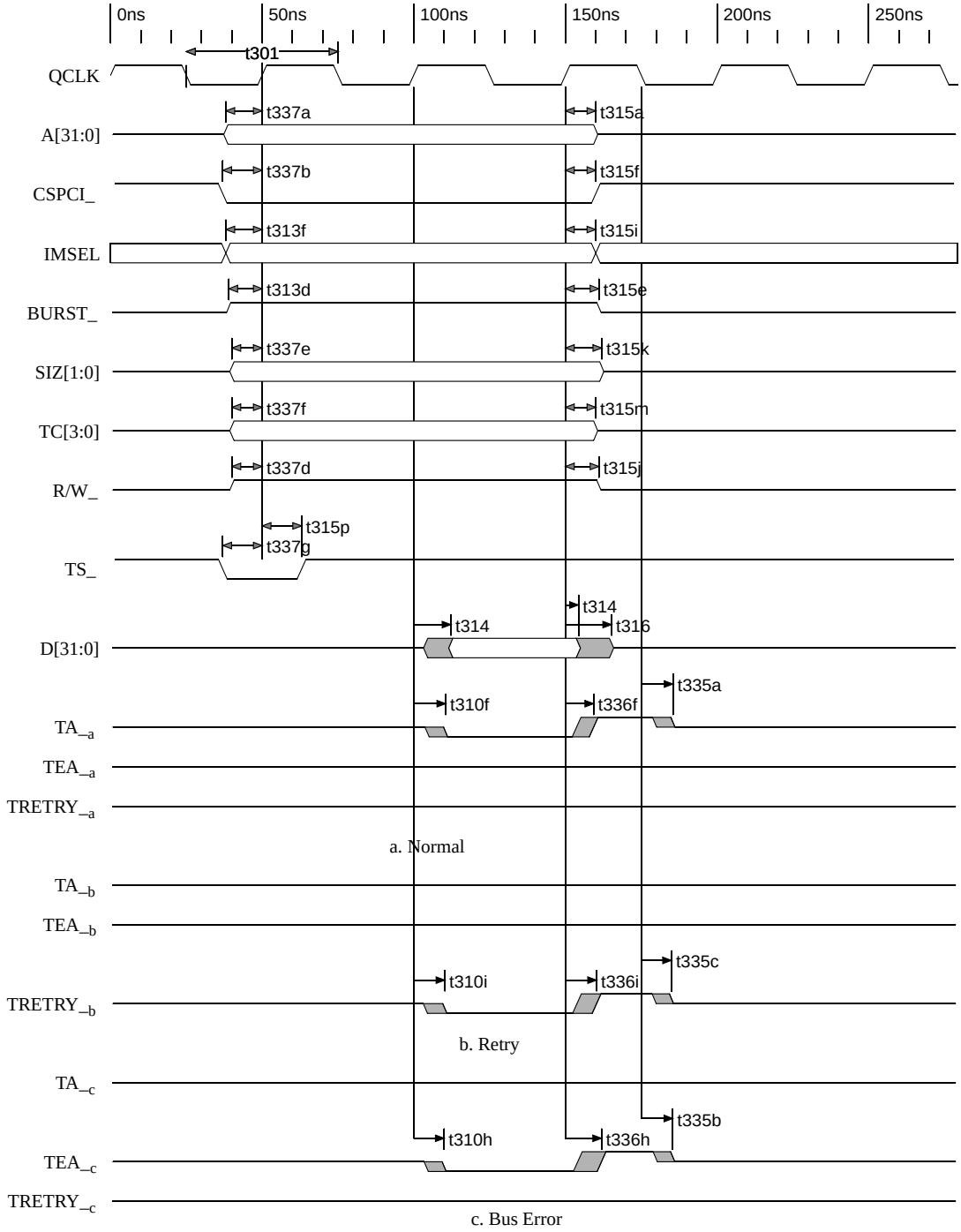

© 2019 Renesas Electronics Corporation

Figure 48: Single Write — QSpan II as MPC860 Slave

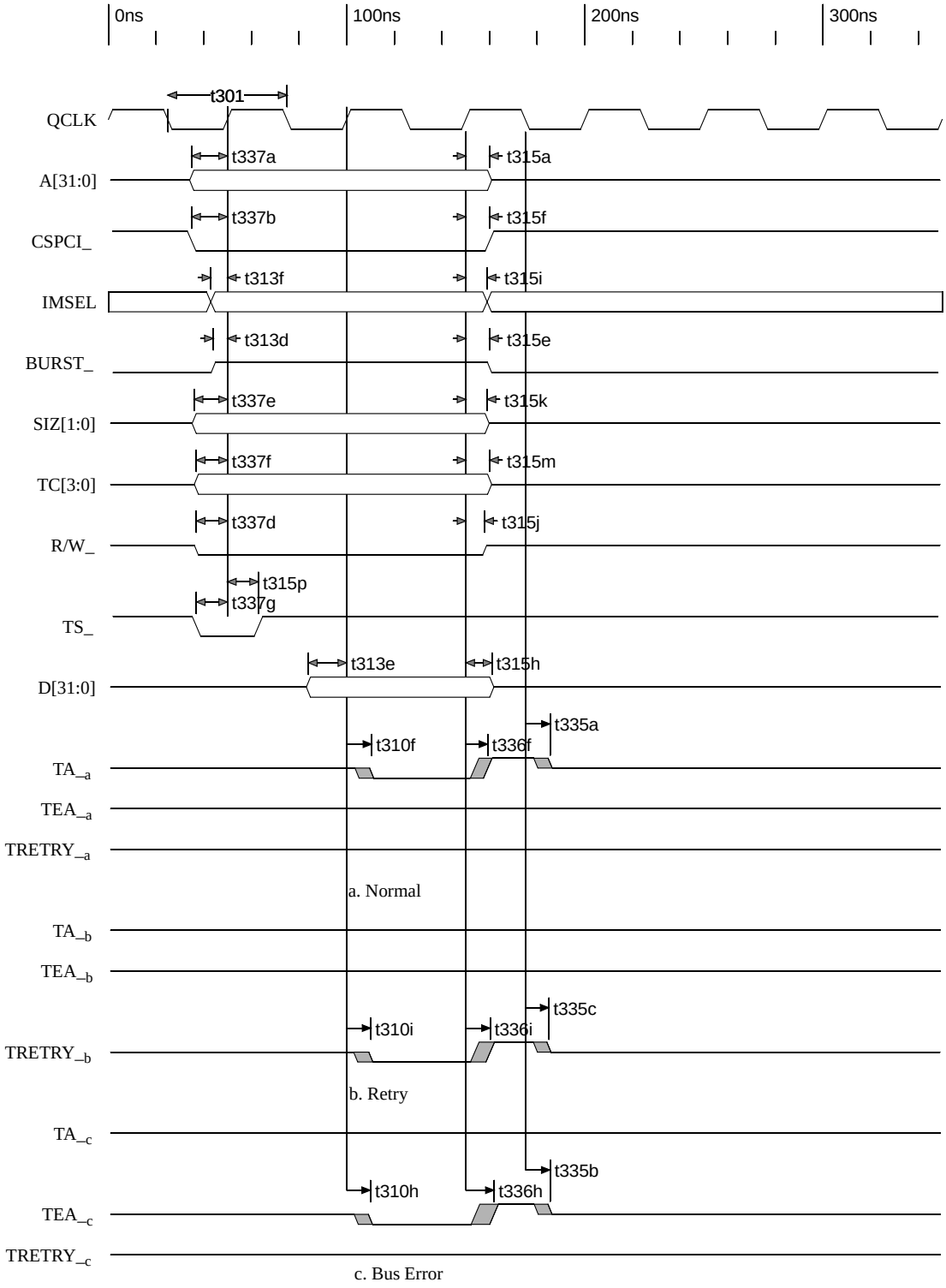

© 2019 Renesas Electronics Corporation

Figure 49: Burst Read — QSpan II as MPC860 Slave

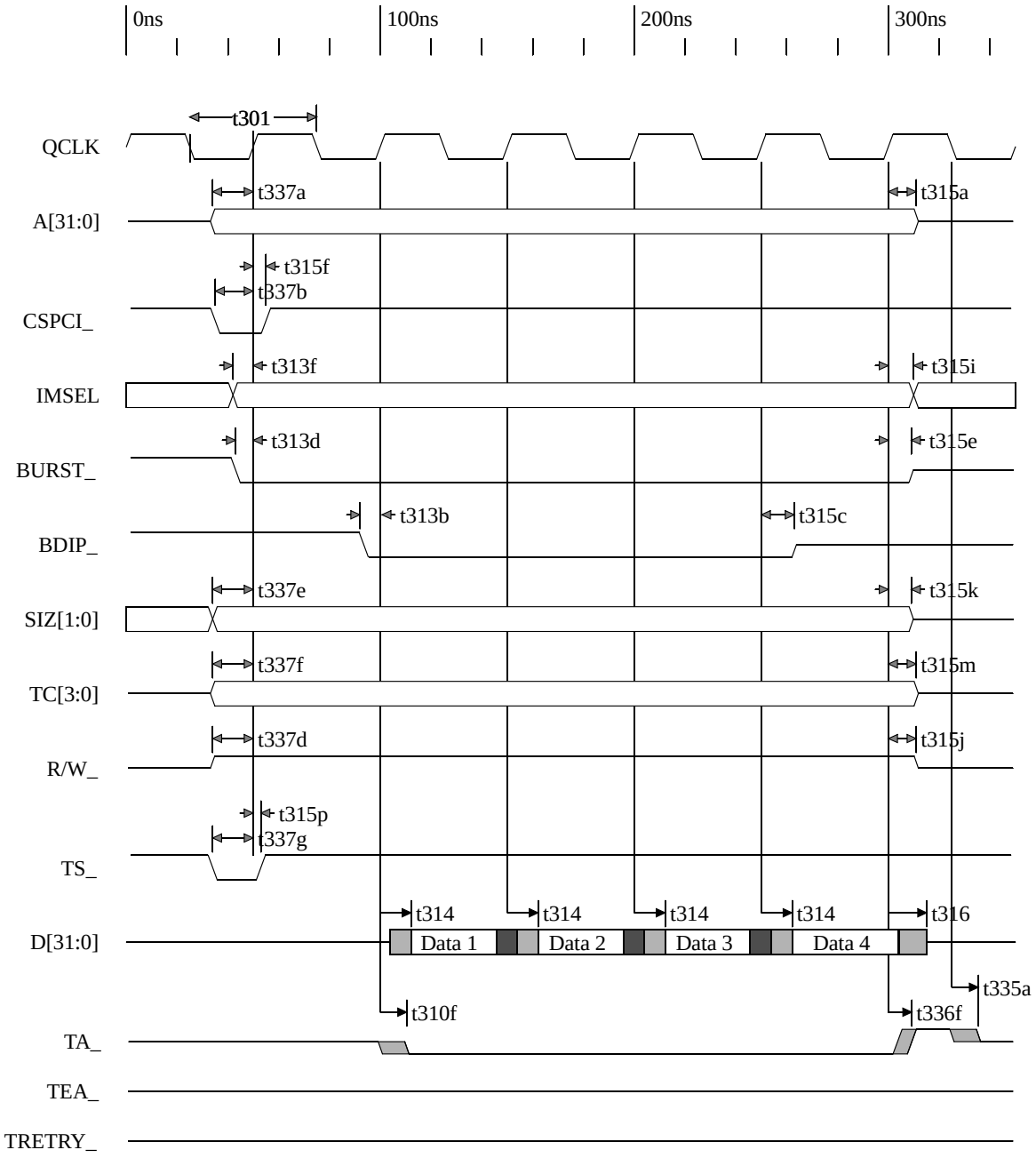

© 2019 Renesas Electronics Corporation

Figure 50: Burst Write — QSpan II as MPC860 Slave

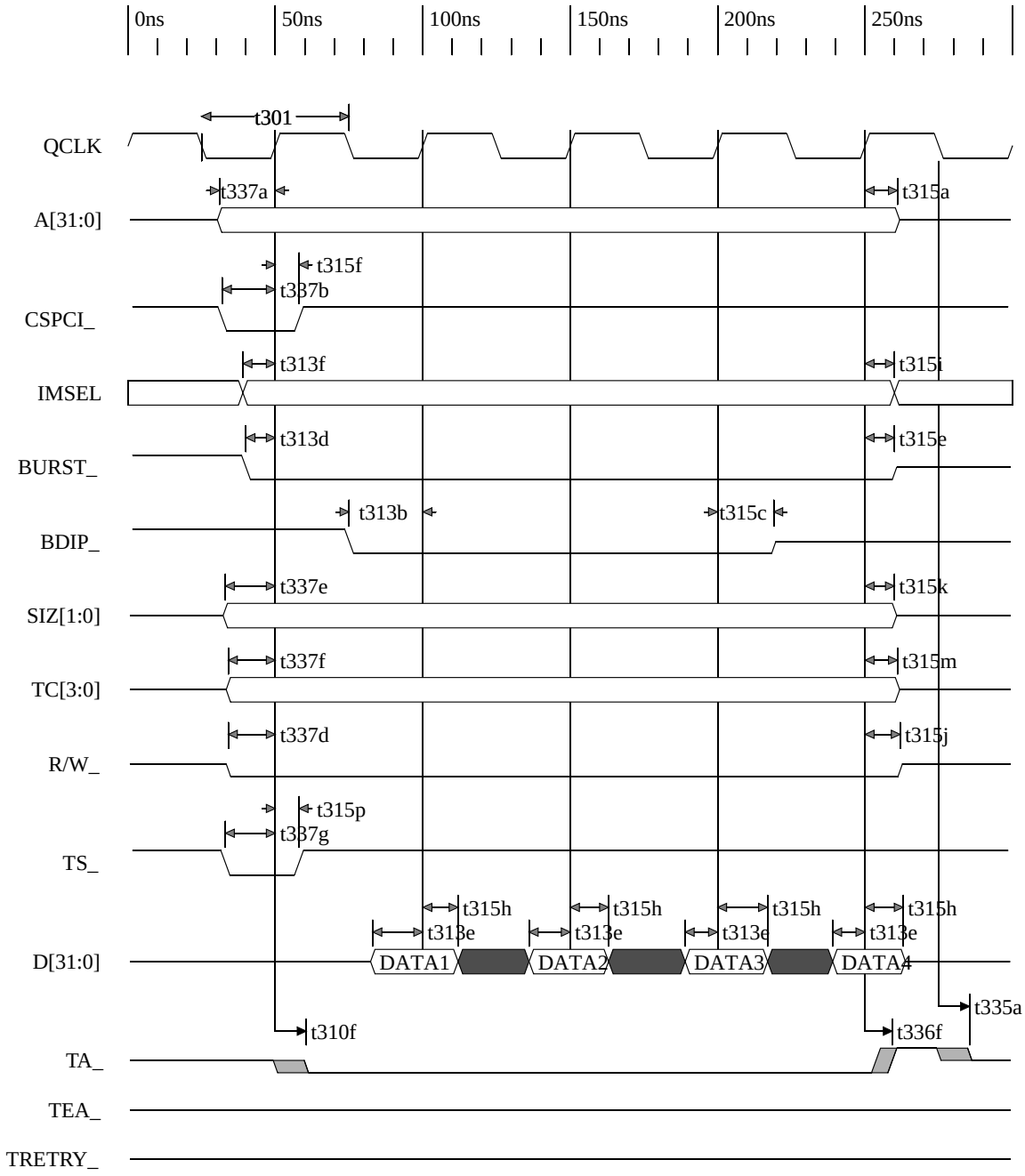

A minimum of one wait state is inserted if starting address is not aligned to a 16-byte boundary.

© 2019 Renesas Electronics Corporation

Figure 51: Register Read — QSpan II as MPC860 Slave

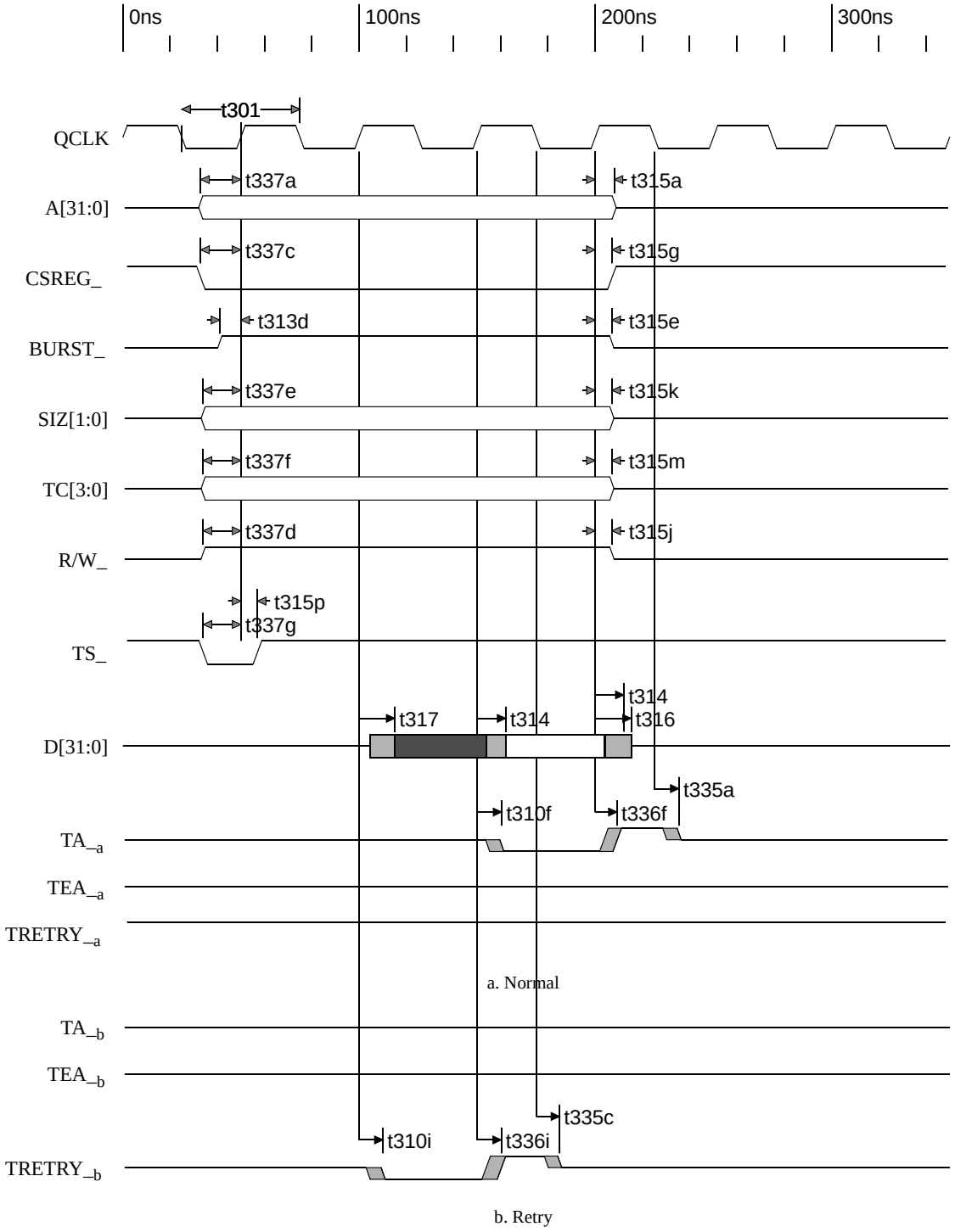

© 2019 Renesas Electronics Corporation

Figure 52: Register Write — QSpan II as MPC860 Slave

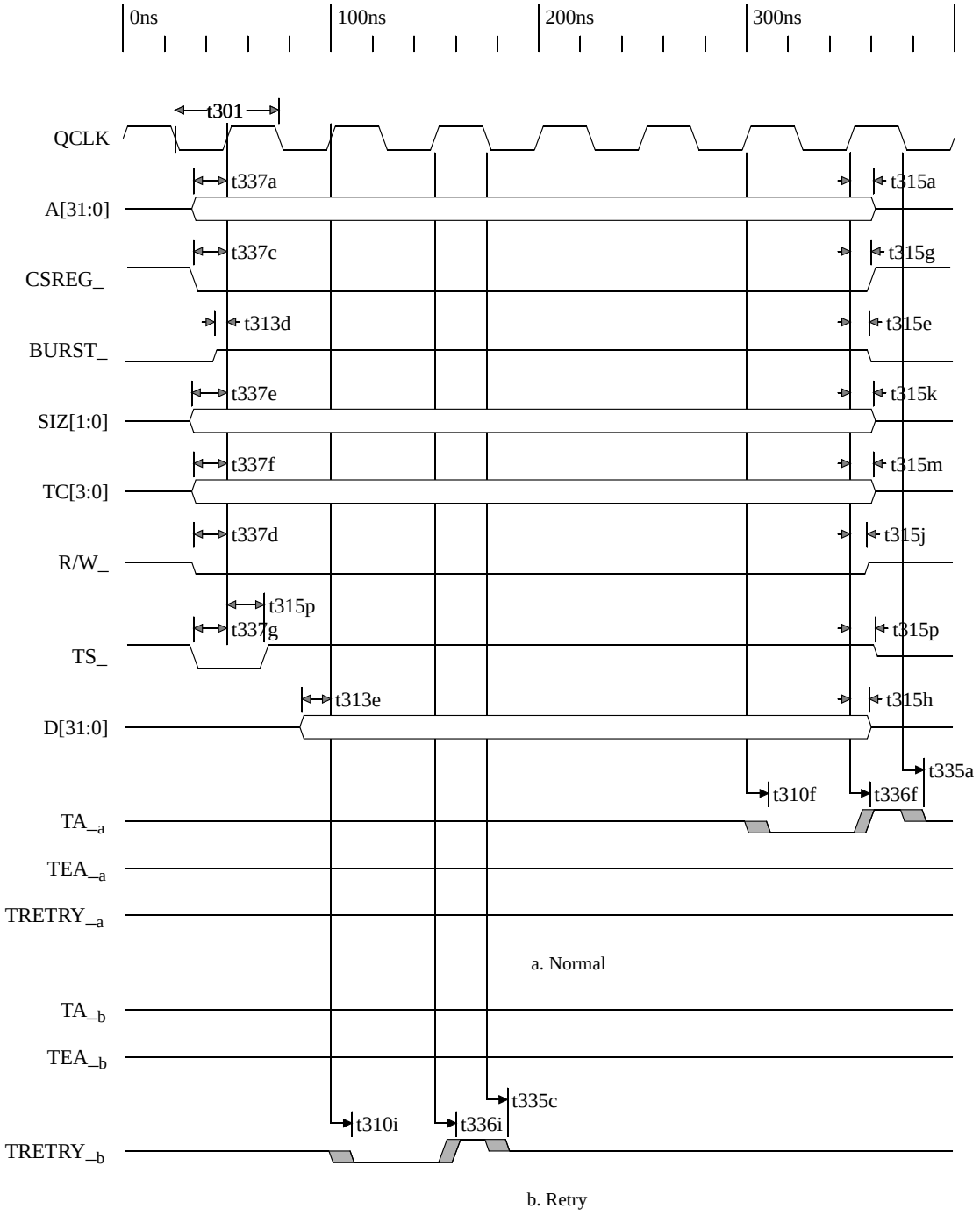

Due to internal synchronization, the number of wait states may vary.

© 2019 Renesas Electronics Corporation

B.4.3.3 QBus IDMA Cycles — MPC860

Figure 53: MPC860 DREQ_ Timing

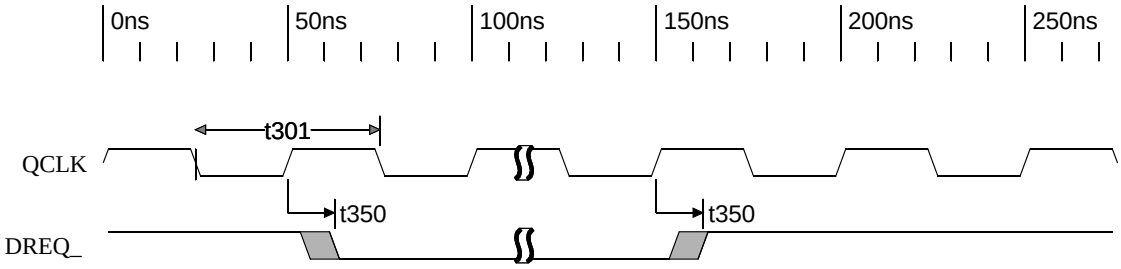

Table 160: Direction[a] of QBus Signals During MPC860 IDMA Cycles

Signal	Single Address	Dual Address
CSPCI_	I (negated)	I (asserted)
TC_[3:0]	N/A	I
TS_	I	I
D	I (write)/ O (read)	I (write)/ O (read)
SDACK_	I	I
DONE_[b]	N/A	N/A
DREQ_	O	O
TA_	I	O
TEA_	I	N/A
TRETRY_	I	N/A

a. I = Input; O = Output; N/A = Not Applicable.

b. QSpan II ignores DONE_ during MPC860 IDMA cycles

© 2019 Renesas Electronics Corporation

Figure 54: MPC860 IDMA Read — Single Address

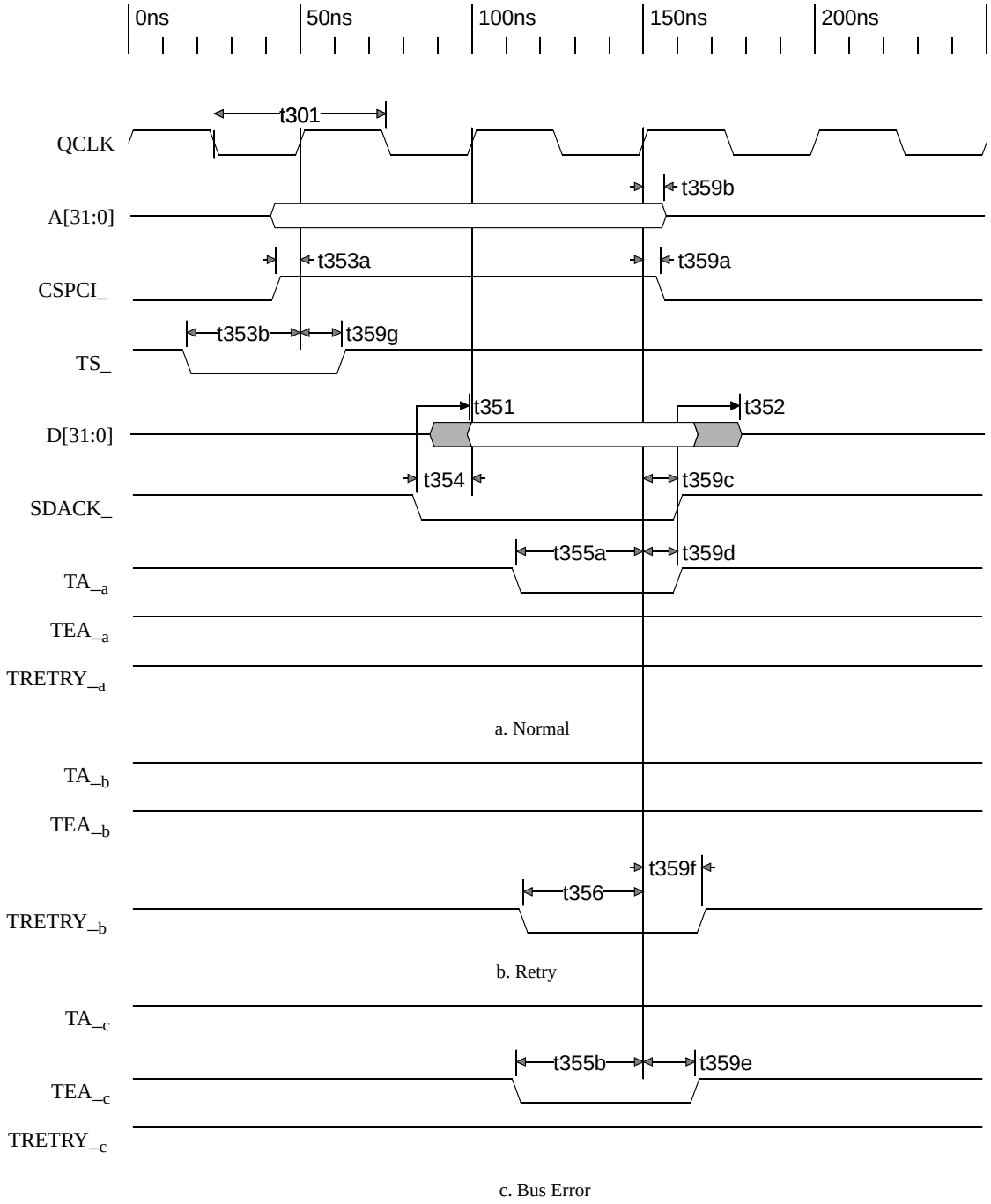

A[31:0] is depicted for completeness. It is not examined by the QSpan II during IDMA transfer; however, it can be used to drive CSPCI_.

© 2019 Renesas Electronics Corporation

Figure 55: MPC860 IDMA Write — Single Address

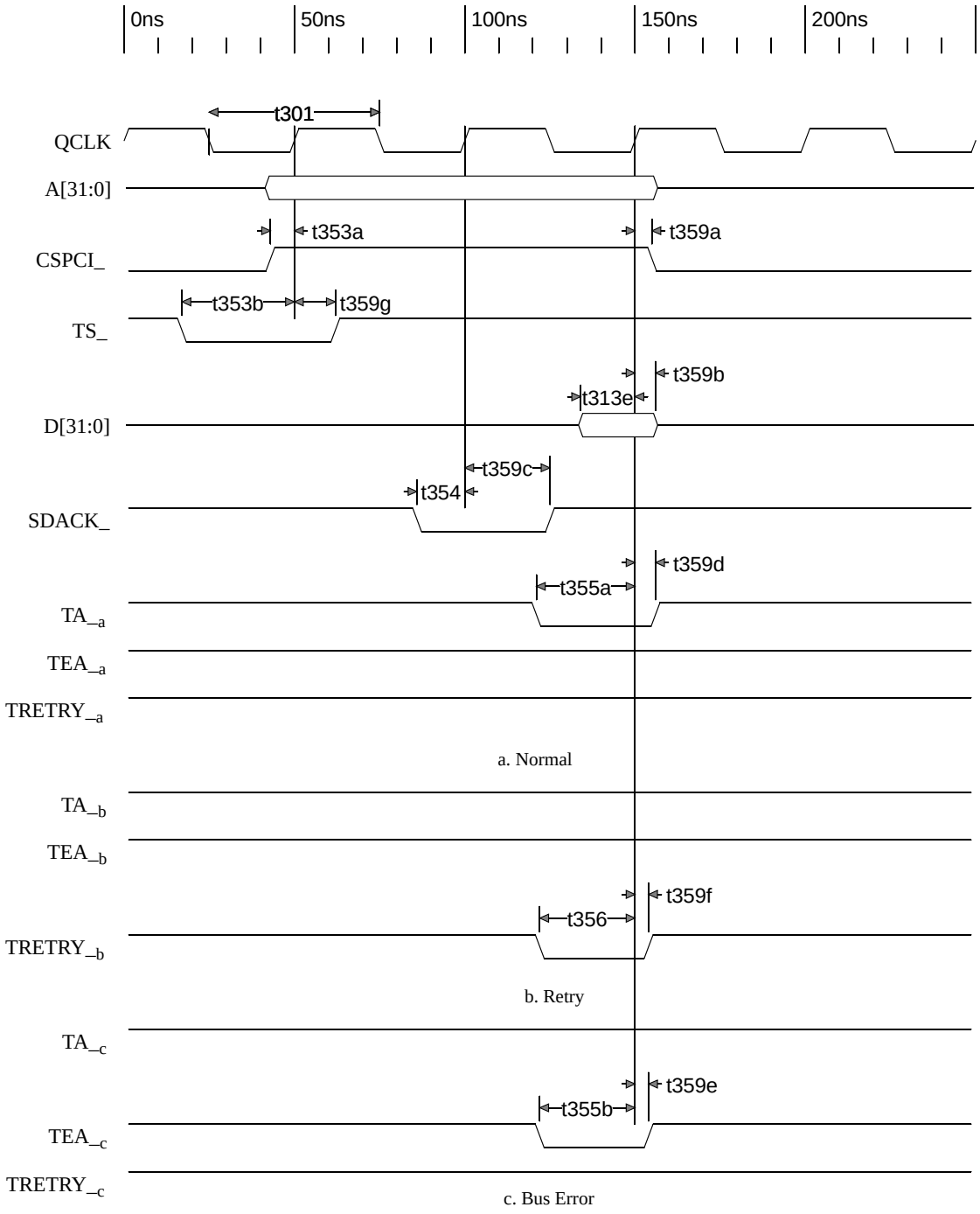

A[31:0] is depicted for completeness. It is not examined by the QSpan II during IDMA transfers; however, it can be used to drive CSPCI_.

© 2019 Renesas Electronics Corporation

Figure 56: MPC860 IDMA Read — Dual Address

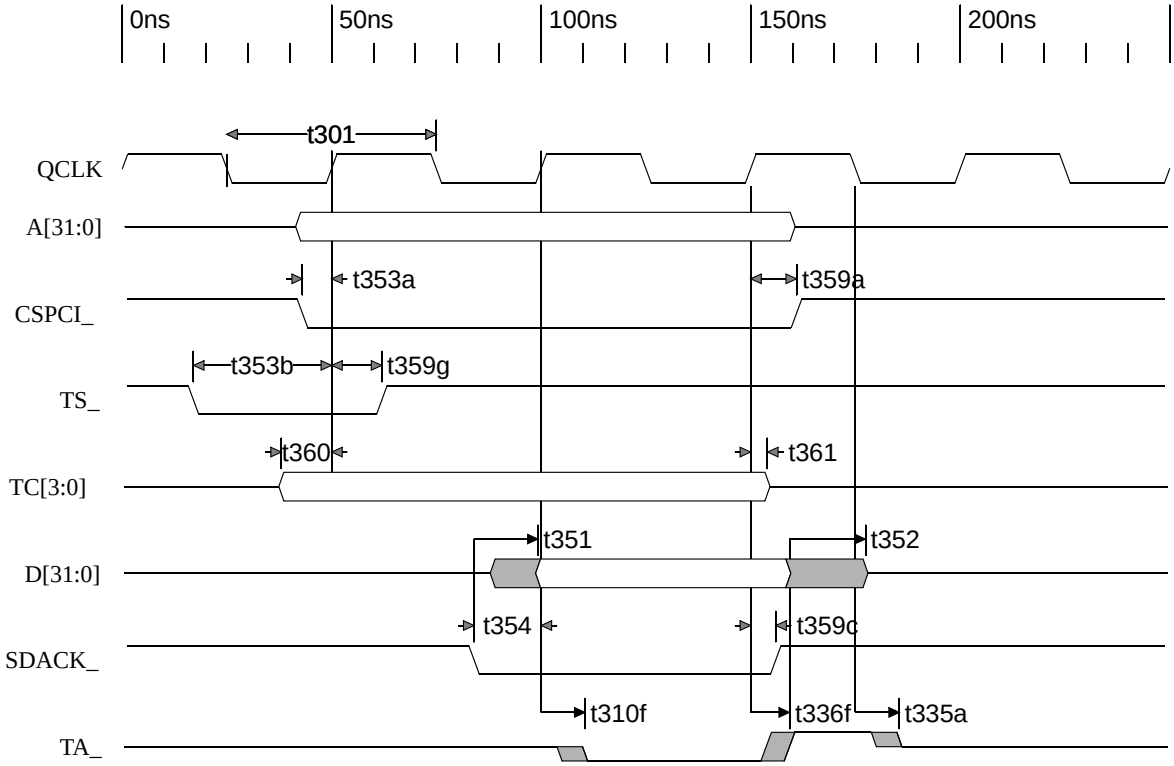

A[31:0] is depicted for completeness. It is not examined by the QSpan II during IDMA transfers; however, it can be used to drive CSPCI_.

© 2019 Renesas Electronics Corporation

Figure 57: MPC860 IDMA Write — Dual Address

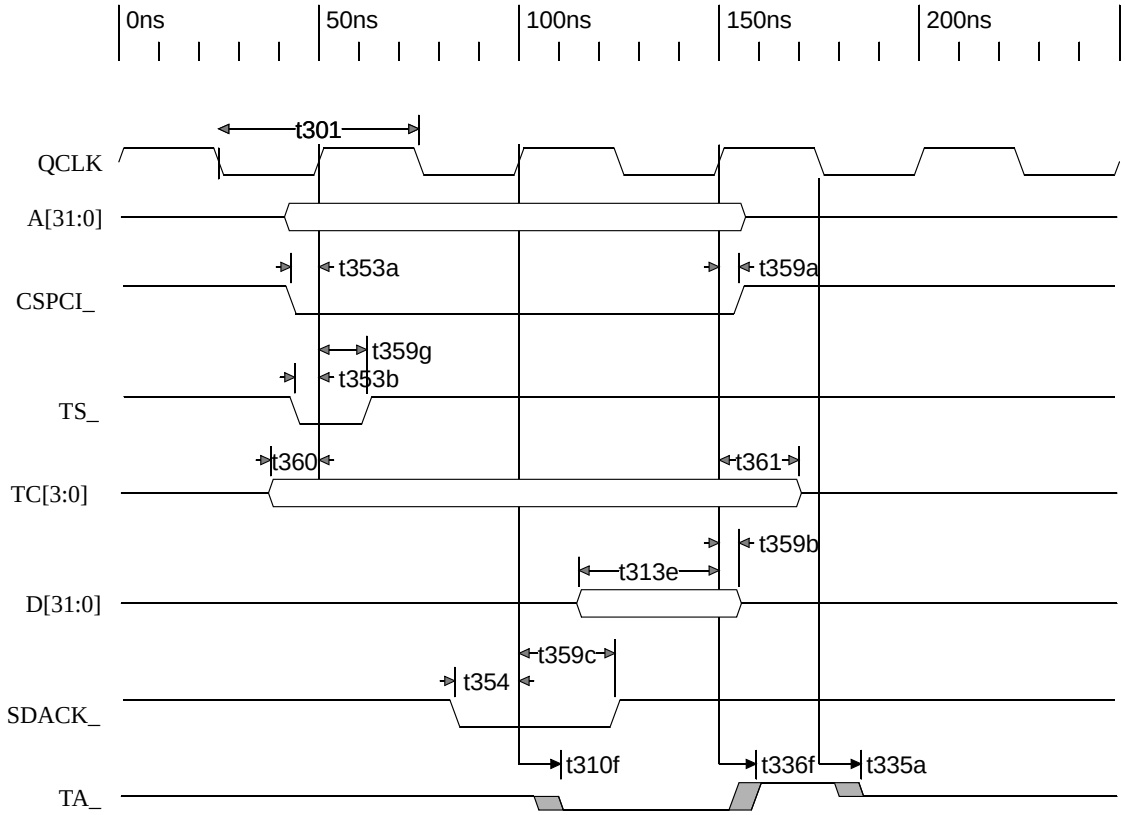

QSpan II does not issue retries or bus errors during dual address IDMA cycles

B.4.4 QBus Interface — M68040

Figure 58: QCLK Input Timing — M68040 BCLK

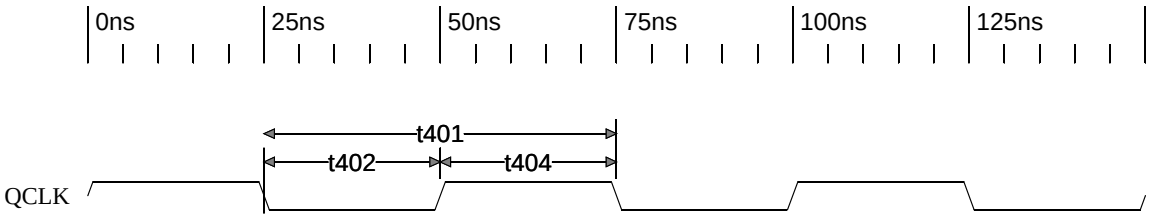

The timing parameters t405 and t406 are measured between 0.8 and 2 Volts. The timing parameters t405 and t406 can be found in Table B.4

© 2019 Renesas Electronics Corporation

B.4.4.1 QBus Master Cycles — M68040

Figure 59: QBus Arbitration — M68040

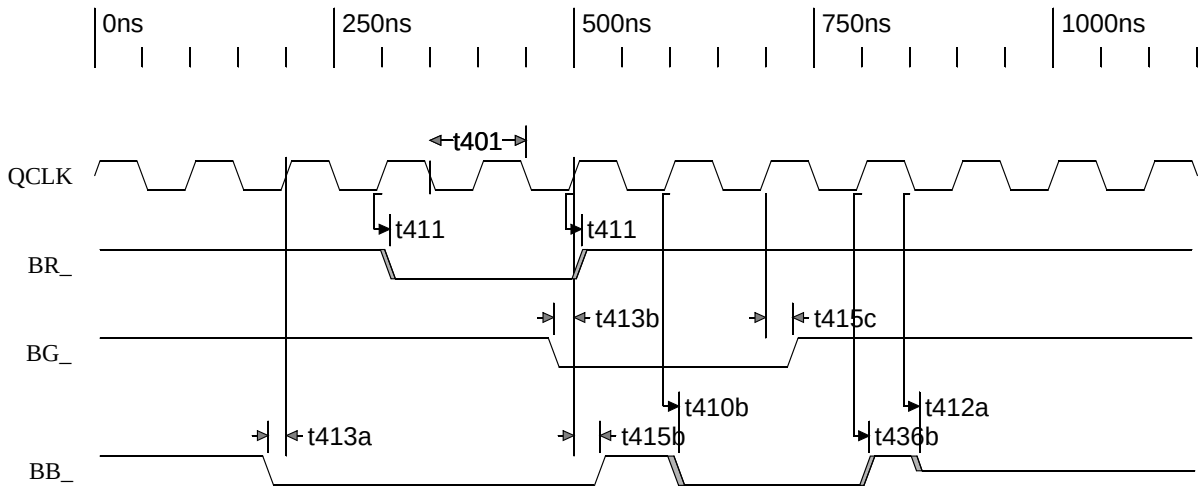

This figure depicts timing in the case where the QSpan II requests ownership of the QBus while another QBus master currently owns the bus (BB_/BGACK_ asserted by the other master). QSpan II obtains ownership of the bus after the other master negates BB_/BGACK_.

© 2019 Renesas Electronics Corporation

Figure 60: Single Read — QSpan II as M68040 Master

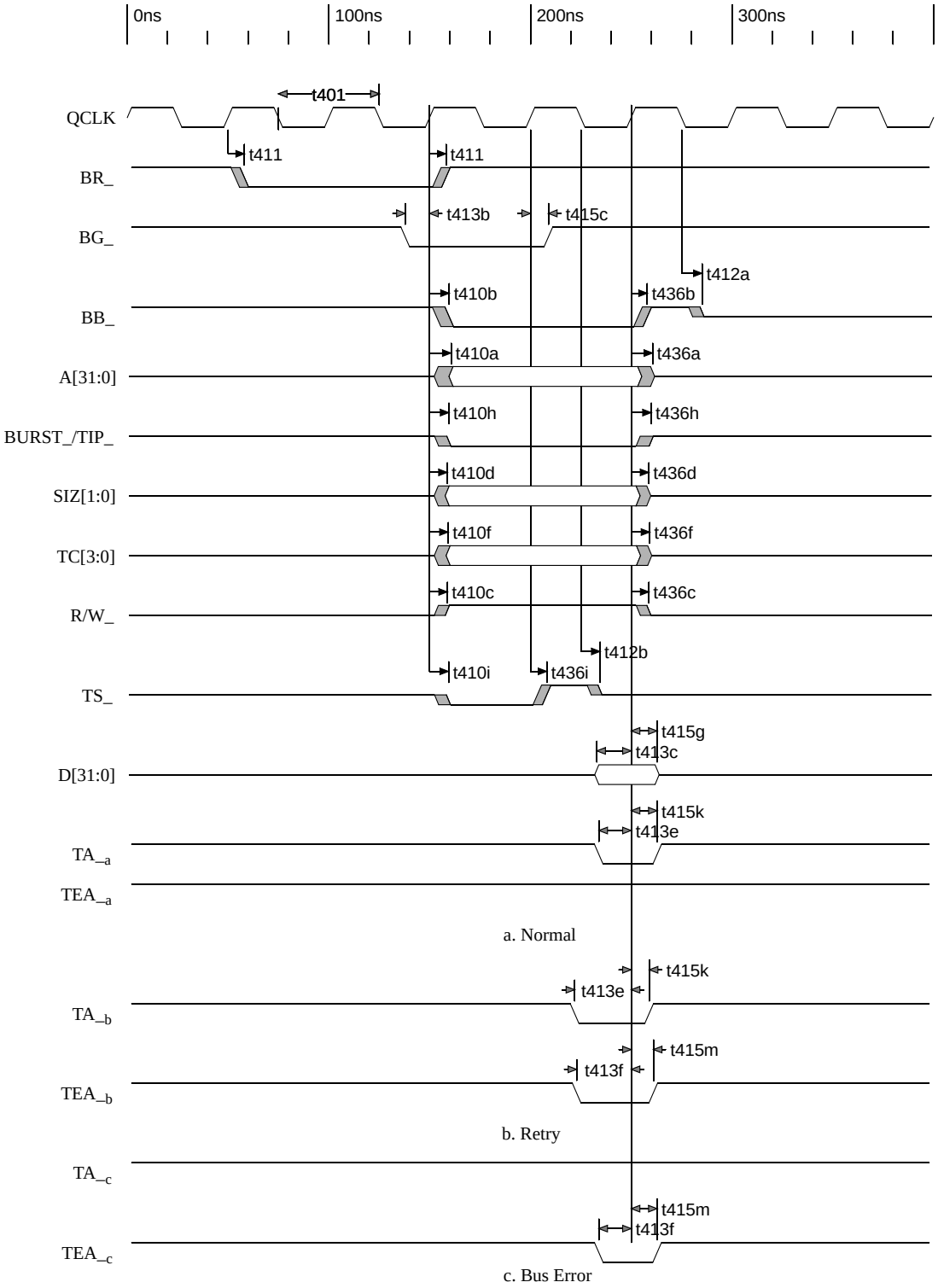

© 2019 Renesas Electronics Corporation

Figure 61: Single Write — QSpan II as M68040 Master

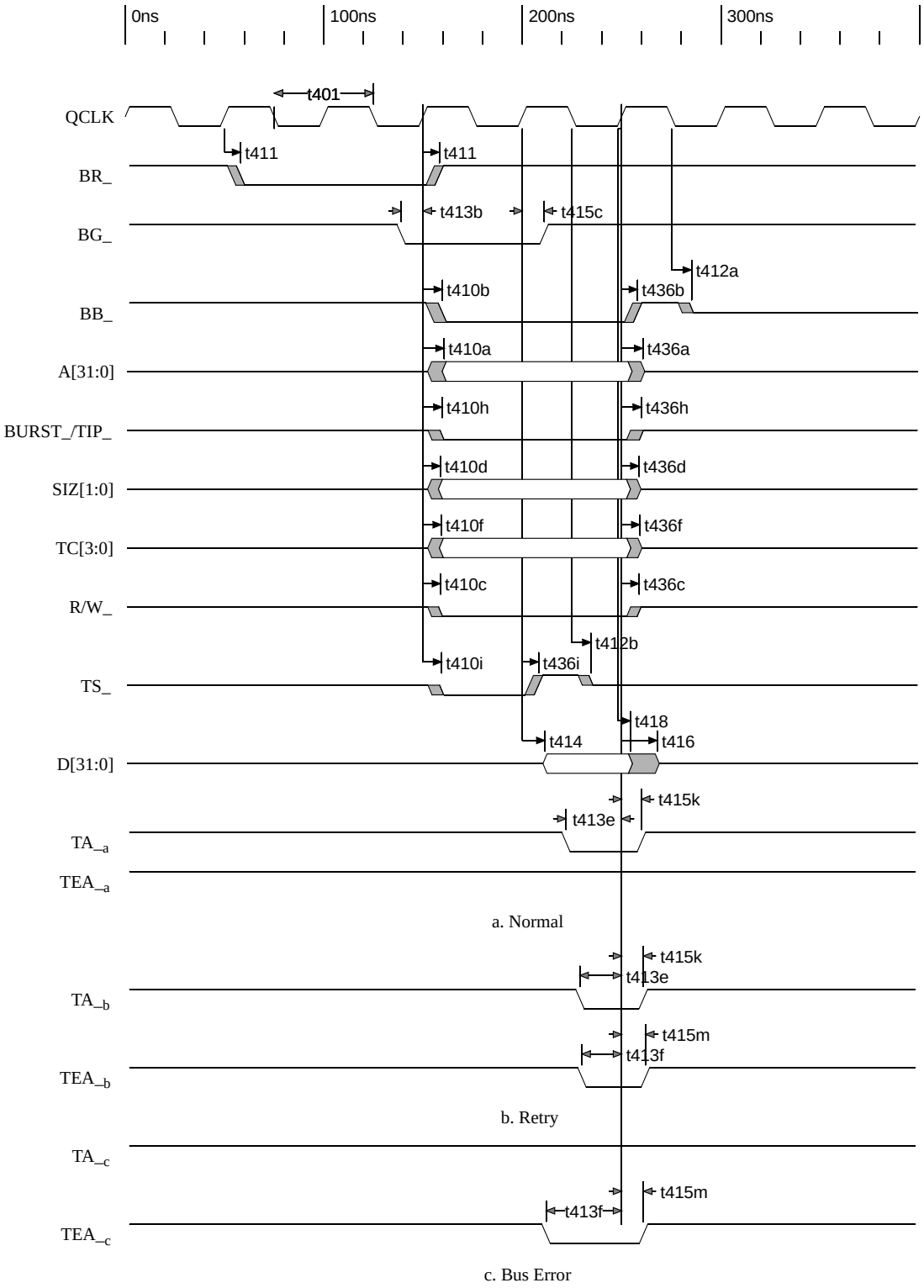

© 2019 Renesas Electronics Corporation

B.4.4.2 QBus Slave Cycles — M68040

Figure 62: Single Read — QSpan II as M68040 Slave

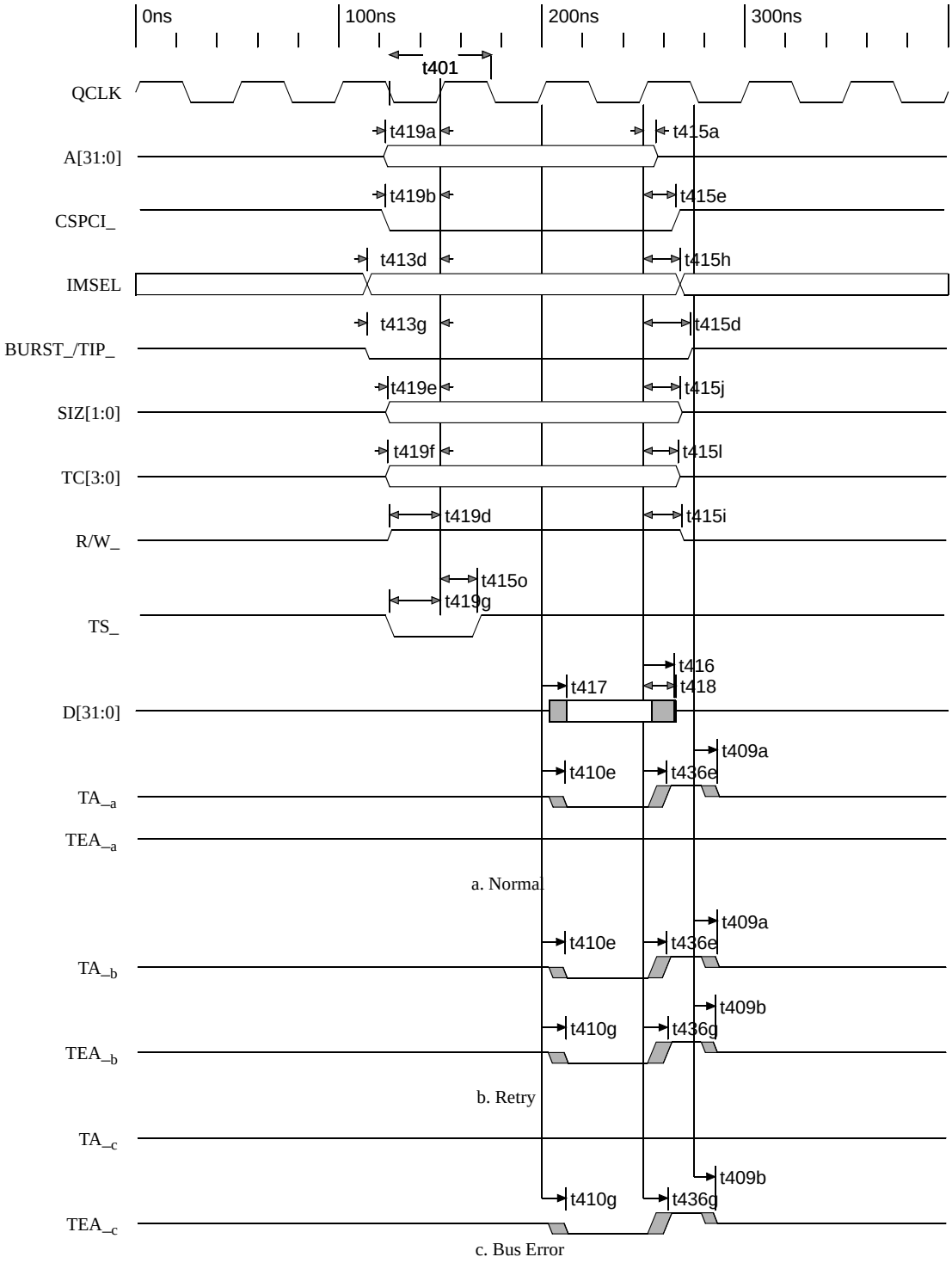

© 2019 Renesas Electronics Corporation

Figure 63: Single Write — QSpan II as M68040 Slave

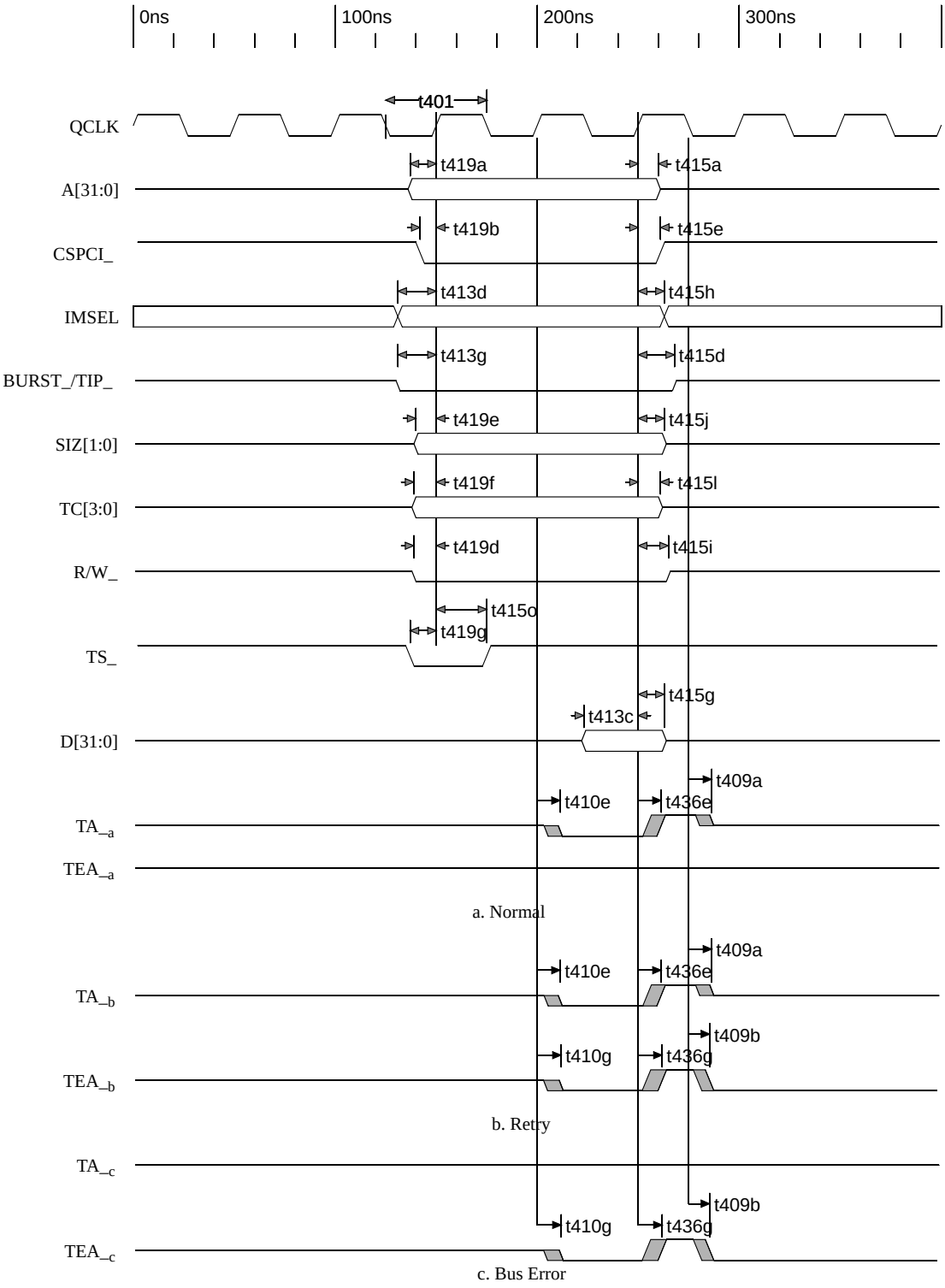

© 2019 Renesas Electronics Corporation

Figure 64: Delayed Burst Read — QSpan II as M68040 Slave

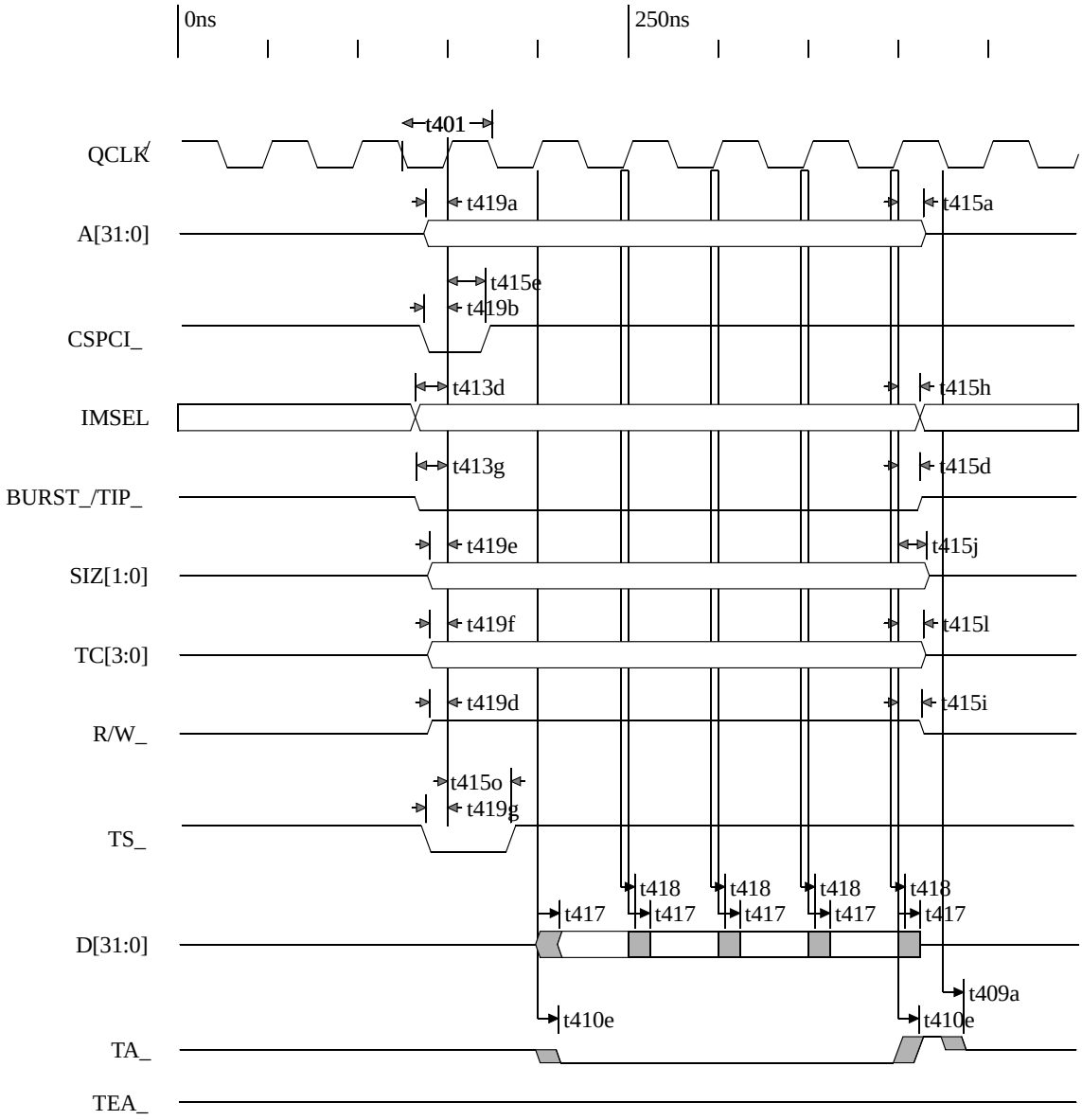

Wait states are inserted if the starting address is not aligned to 16-byte boundary.

© 2019 Renesas Electronics Corporation

Figure 65: Posted Burst Write — QSpan II as M68040 Slave

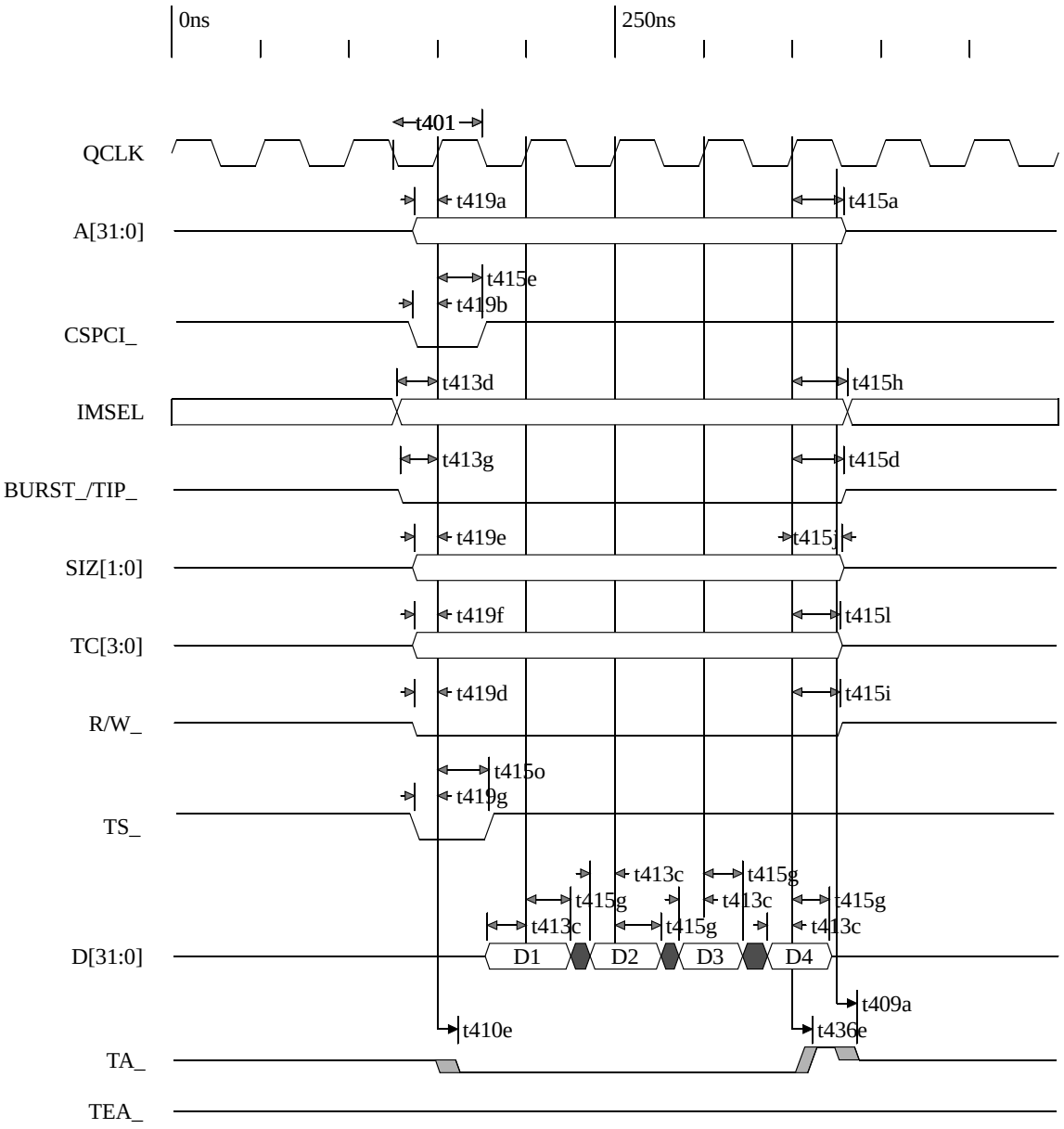

Wait states are be inserted if the starting address is not aligned to 16-byte boundary.

© 2019 Renesas Electronics Corporation

Figure 66: Register Reads — QSpan II as M68040 Slave

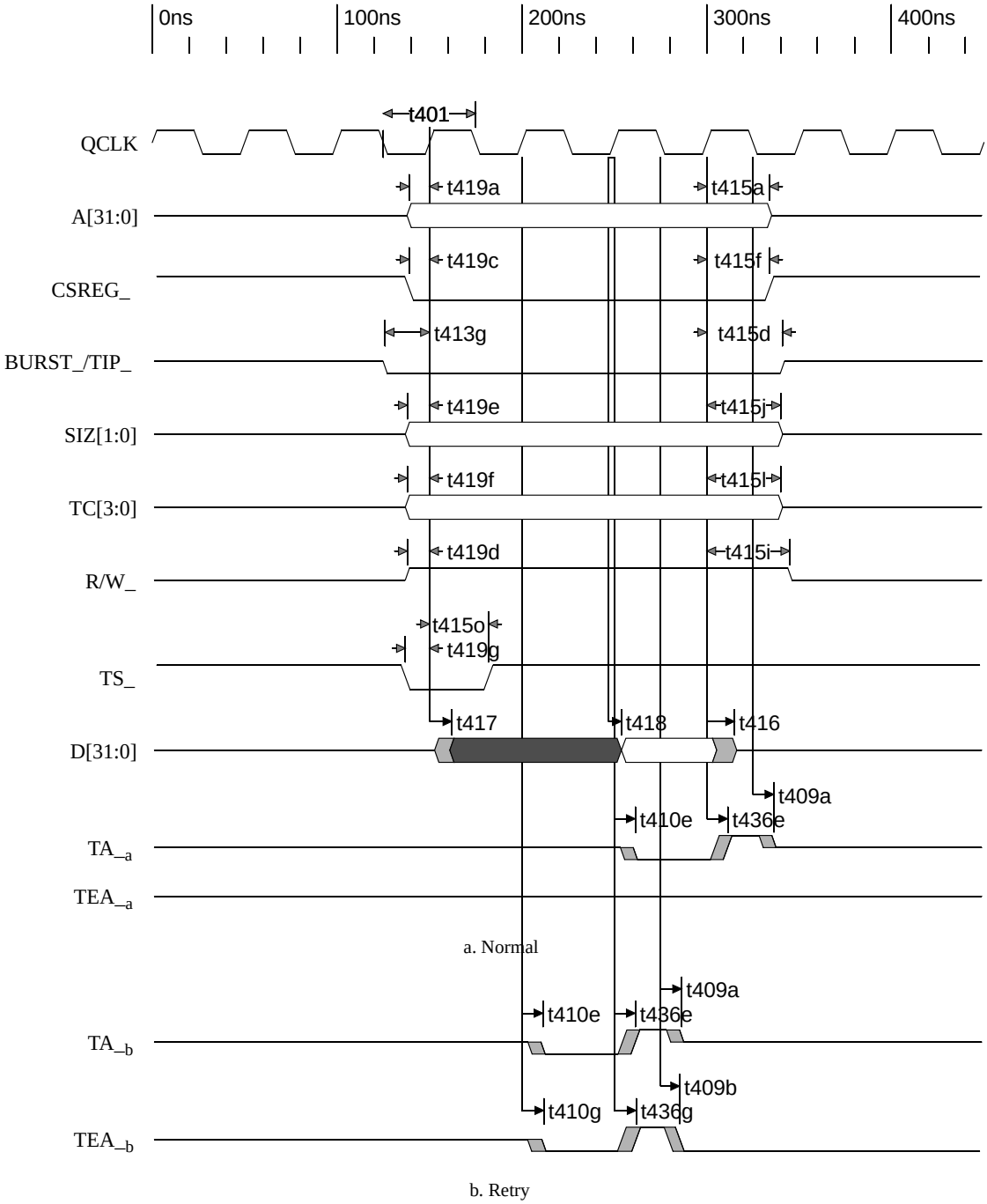

© 2019 Renesas Electronics Corporation

Figure 67: Register Write — QSpan II as M68040 Slave

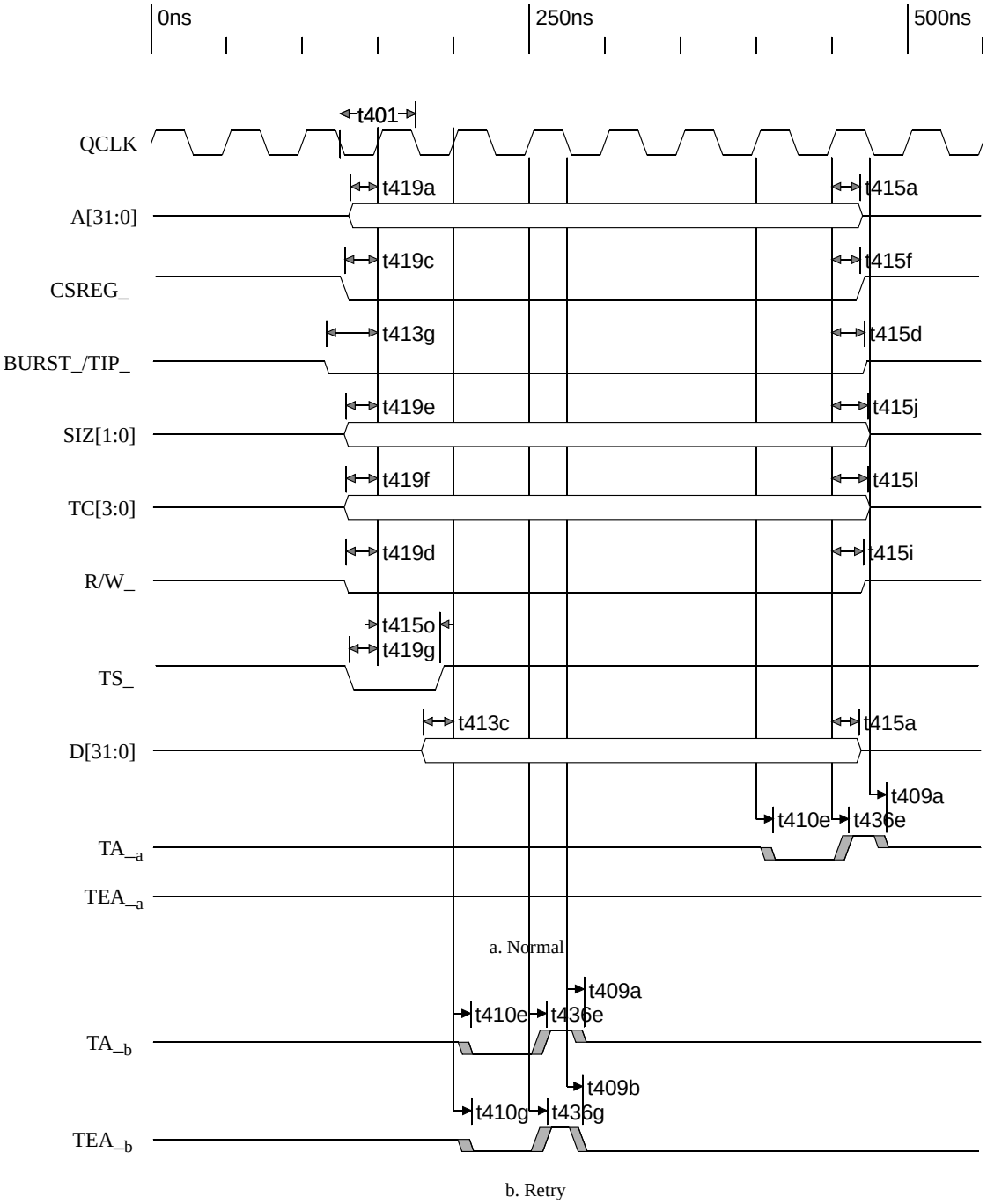

© 2019 Renesas Electronics Corporation

B.4.5 Interrupts and Resets

Figure 68: Reset from PCI Interface — RST# related to RESETO_

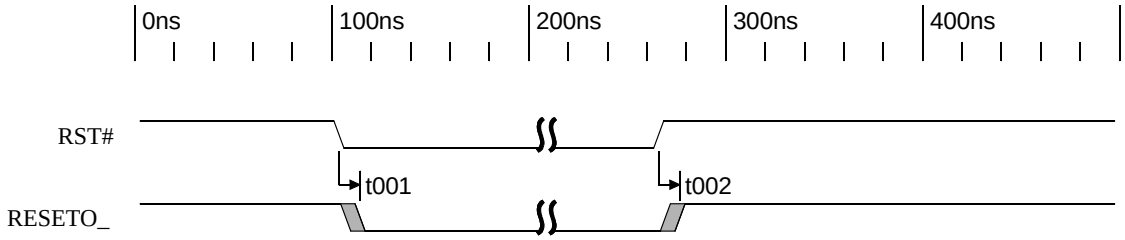

Figure 69: Software Reset

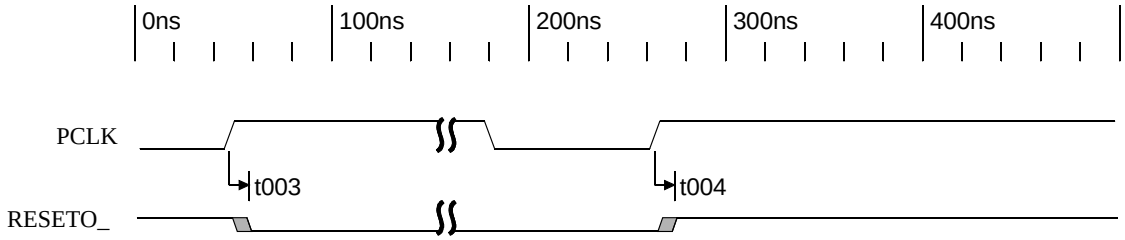

Figure 70: INT# Interrupt to QINT_ Interrupt

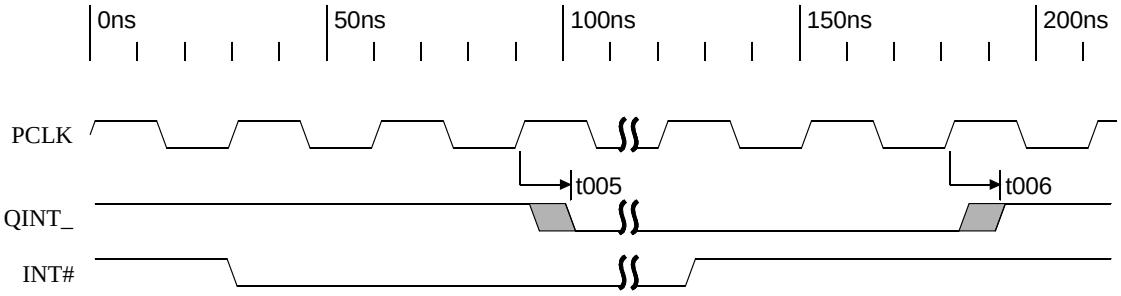

Figure 71: PERR# Interrupt

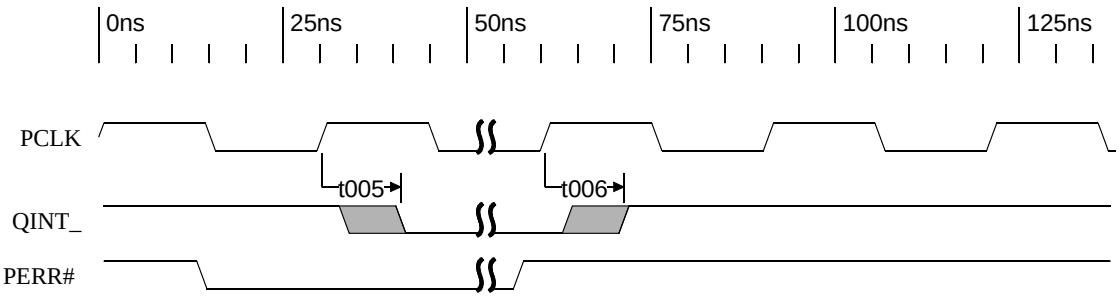

© 2019 Renesas Electronics Corporation

Figure 72: SERR# Interrupt

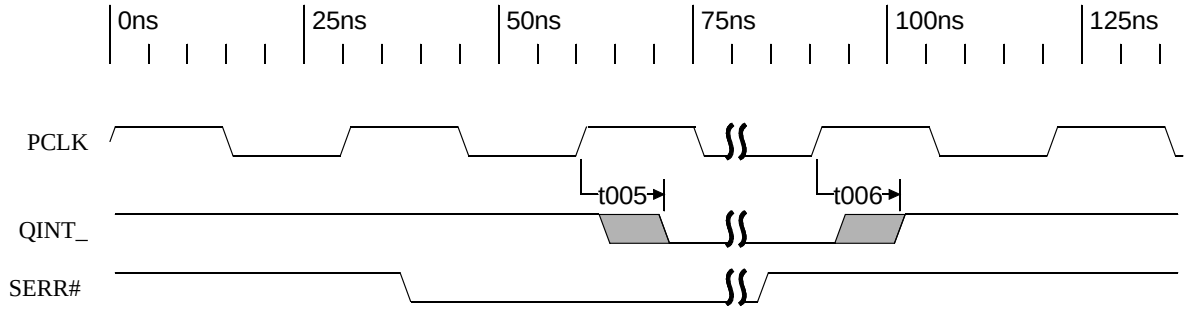

Figure 73: QINT_ Interrupt to INT# Interrupt

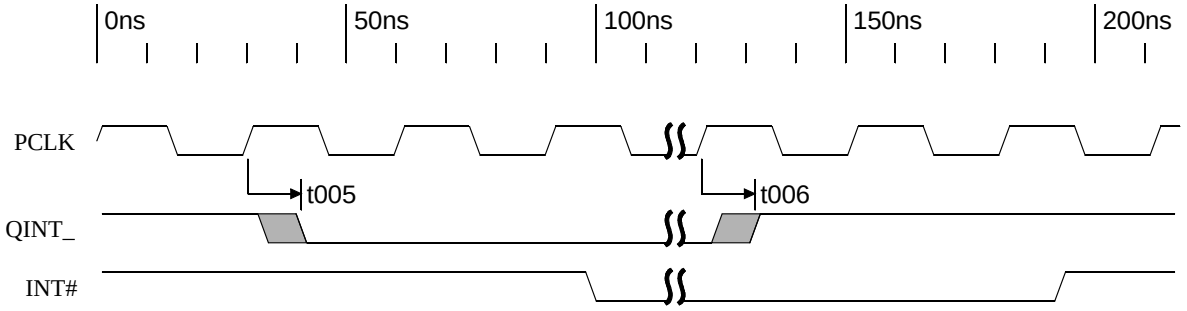

© 2019 Renesas Electronics Corporation

B.4.6 Reset Options

The parameters for the following figure are in Table 158 on page 313.

Figure 74: Reset Options

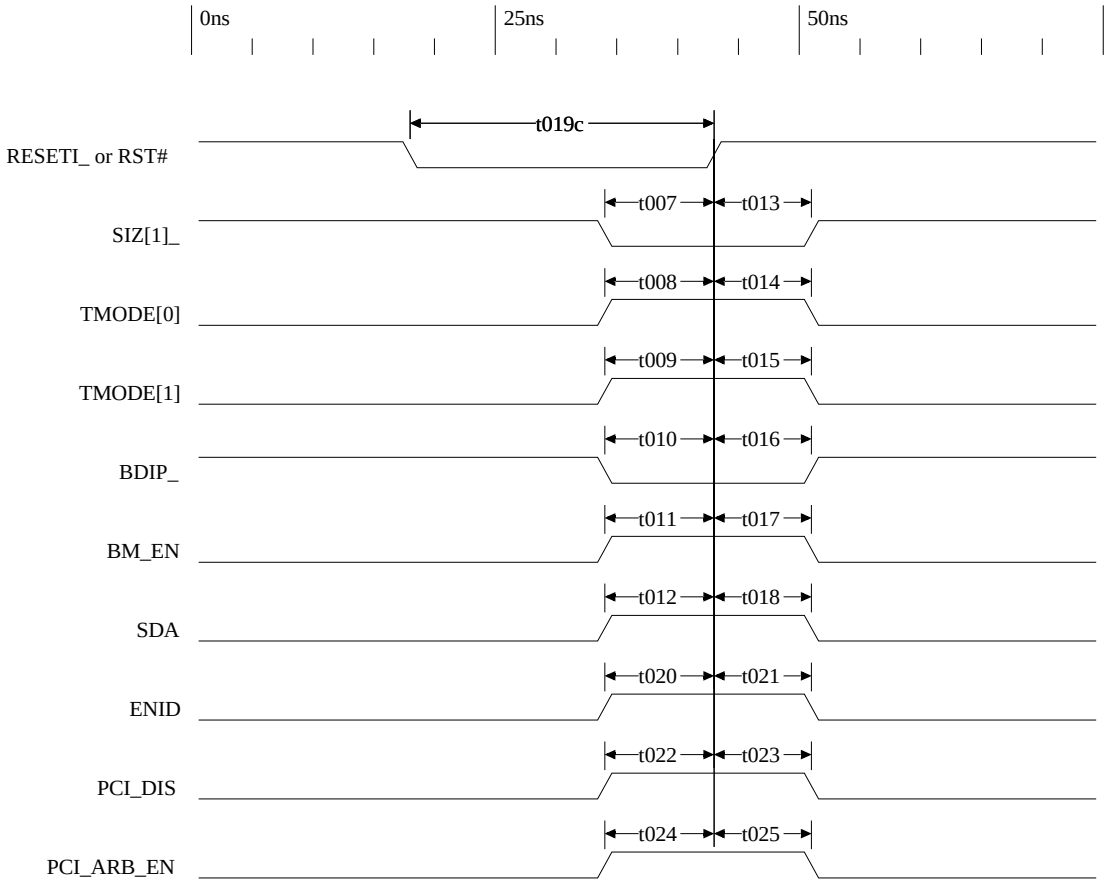

© 2019 Renesas Electronics Corporation

© 2019 Renesas Electronics Corporation

Appendix C: Typical Applications

This appendix describes how to connect the QSpan II to the following Motorola-based buses: MC68360 (QUICC), MPC860 (PowerQUICC), and M68040. Glue logic is not required for any of these applications.

The following topics are discussed:

- "MC68360 Interface" on page 359
- "MPC860 Interface" on page 365
- "M68040 Interface" on page 372

C.1 MC68360 Interface

This section describes how the QSpan II can be connected to the MC68360 communications controller.

C.1.1 Hardware Interface

C.1.1.1 Clocking

QSpan II must be clocked by the CLKO1 output from the MC68360 processor. All of the AC timing waveforms for the QSpan II/MC68360 interface are based on CLKO1.

© 2019 Renesas Electronics Corporation

Figure 75: MC68360 Interface

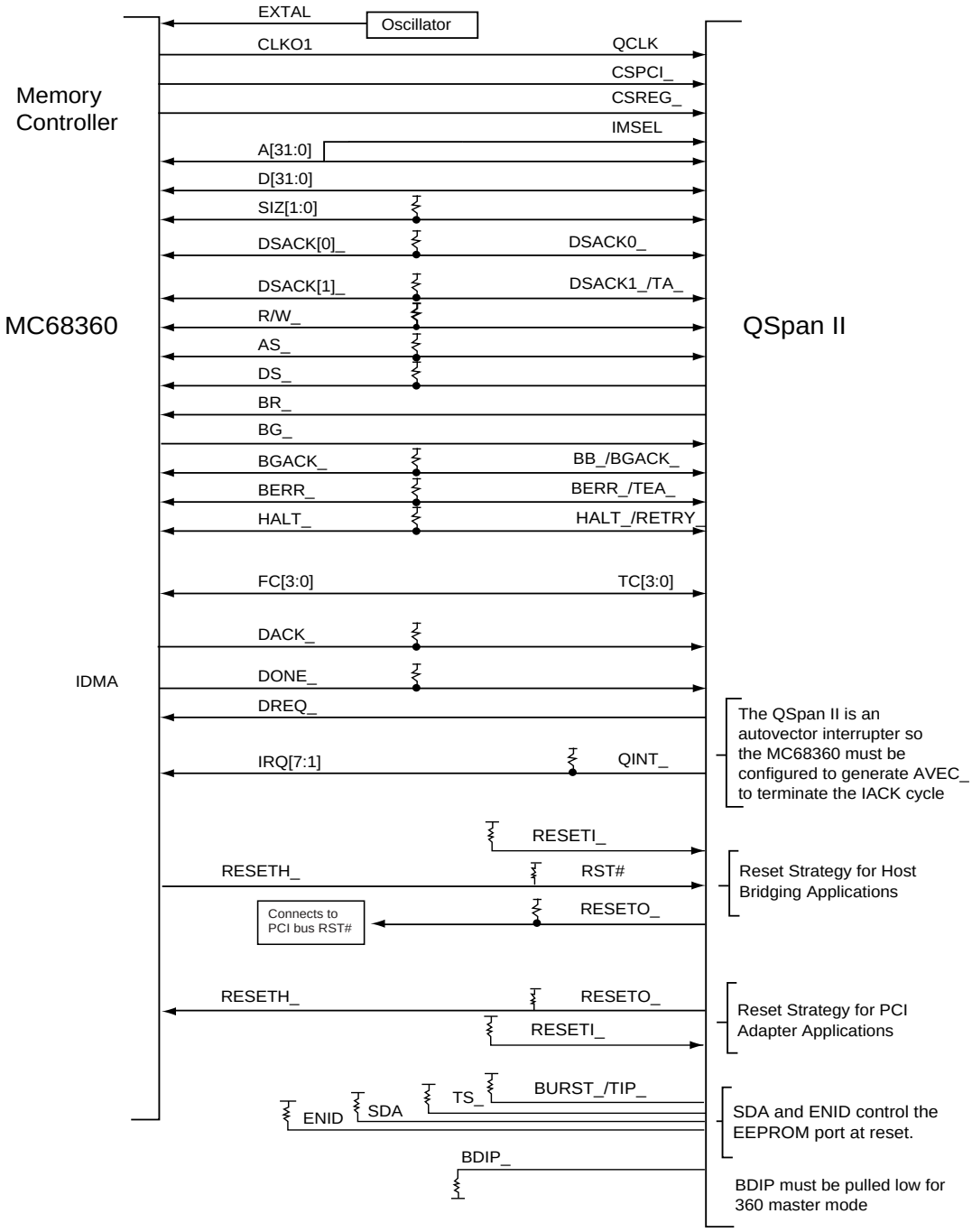

C.1.1.2 Resets

There are three reset situations depending upon the use of the QSpan II in your application: PCI adapter card bridge, PCI Host bridge, or CompactPCI adapter card supporting Hot Swap.

© 2019 Renesas Electronics Corporation

For a PCI adapter card application, use the following reset configuration: connect the QSpan II's reset output (RESETO_) to the hard reset input (RESETH_) on the MC68360. This enables the QSpan II to reset the MC68360 when PCI RST# is asserted, or when the software reset bit is asserted (SW_RST bit in the MISC_CTL register on Table 127 on page 274). QSpan II's reset input (RESETI_) is typically unused and should be pulled high through a resistor. HS_HEALTHY_ should be left open as it has an internal pull-down resistor.

For a PCI Host bridge application, use the following reset configuration: the QSpan II's PCI RST# (global reset for the QSpan II) input is connected to the hardware reset signal (RESETH_) on the MC68360. QSpan II's reset output (RESETO_) can be connected to the PCI RST# inputs of the other PCI devices (the QSpan II's RST# input is not connected to the PCI bus RST# signal). Therefore, at power-up the MC68360's power-on-reset circuitry will assert RESETH_, which fully resets the QSpan II device. QSpan II will assert RESETO_ to reset the agents on the PCI bus when RST# is active.

The reset example described in the previous paragraph also allows the MC68360 processor to reset all of the PCI agents under software control. The MC68360 can write to the software reset bit in the QSpan II's MISC_CTL register, which will cause the QSpan II to assert its RESETO_ signal. QSpan II's reset input (RESETI_) is typically unused and should be pulled high through a resistor (for more information about resets, see Chapter 14: "Reset Options" on page 153). HS_HEALTHY_ should be left open as it has an internal pull-down resistor.

For a CompactPCI adapter card that supports Hot Swap, use the following reset configuration: the QSpan II's HS_HEALTHY_ input should be connected to the Hot Swap Controller's HEALTHY_ output. Also, connect the QSpan II's reset output (RESETO_) to the hard reset input (RESETH_) on the MC68360. This enables the QSpan II to reset the MC68360 when PCI RST# is asserted, or when the software reset bit is asserted (SW_RST bit in the MISC_CTL register on Table 127 on page 274). QSpan II's reset input (RESETI_) is typically unused and should be pulled high through a resistor.

C.1.1.3 Memory Controller

QSpan II requires that two chip selects be generated in order to access the registers (CSREG_) and the PCI bus (CSPCI_). This is accomplished by using two of the chip select outputs from the memory controller within the MC68360. There are two QBus slave images in the QSpan II which are used to access the PCI bus. The image that is selected when the PCI chip select is asserted depends upon the state of the Image Select signal (IMSEL). If IMSEL is low then QBus slave image 0 is selected; otherwise, QBus slave image 1 is selected. IMSEL is typically generated directly from one of the high-order address lines on the QBus (for example, dependent on the processor's memory map).

An alternative method is to use a spare I/O port pin on the MC68360 processor to control the QSpan II's IMSEL input pin. When the opposite QBus slave image must to be accessed, the MC68360 will first perform a write to change the state of this I/O port pin.

© 2019 Renesas Electronics Corporation

C.1.1.4 QBus Direct Connects

All other QBus interface signals can be directly connected to the appropriate MC68360 signal. External pull-up resistors should be connected to all bus control signals — excluding SIZ[1] and BDIP_ which are reset options and should be pulled to the desired state — to ensure that they are held in the inactive state. See Figure 75 to determine which signals require external pull-ups.

C.1.1.5 Interrupts

QSpan II device can pass interrupts between the PCI bus and the QBus. For host bridging applications, the QSpan II can accept INT# as an input and assert QINT_ as an output. QSpan II's interrupt output (QINT_) should be connected to one of the seven possible interrupt inputs (IRQ[7:1]) on the MC68360 processor. When the MC68360 is acknowledging a QSpan II interrupt, it must be programmed to generate the cycle termination. QSpan II is an autovector interrupter and does not have the ability to assert AVEC_ during the interrupt acknowledge cycle.

For PCI adapter card applications, the QSpan II can accept interrupts from the QBus on the QINT_ pin and pass them through the QSpan II to its PCI INT# output. See Chapter 8: “The Interrupt Channel” on page 113 for more information about interrupts.

C.1.1.6 PCI Signals

QSpan II’s PCI signals can be directly connected to the appropriate PCI signal on the motherboard or the PCI connector. Pull-up resistors may be required to be added to the PCI bus control signals depending on the application. If you are designing a local PCI bus on a motherboard then pull-up resistors are required (for more information, see the *PCI 2.2 Specification*).

For host bridging applications, possible implementations for the QSpan II’s IDSEL signal include the following:

- connect it to a spare AD signal (AD[31:12])
- connect it to ground through a resistor if the host is not required to respond to PCI configuration cycles

The QSpan II supports both 5V and 3.3V I/O signaling environments.

V_H (Highest I/O voltage) must be connected to the highest voltage level the QSpan II I/Os will observe on either the QBus or the PCI bus.

C.1.1.7 EEPROM Interface

A serial EEPROM may be required for applications which must support a Plug and Play environment (for more information about EEPROM reset options, see “Reset Options” on page 363). QSpan II also allows that QBus processor to initialize the QSpan II to support a Plug and Play environment (for more information, see “EEPROM Configuration and Plug and Play Compatibility” on page 123).

© 2019 Renesas Electronics Corporation

C.1.1.8 Reset Options

A number of reset options exist with the QSpan II device. The following signals are sampled on the rising edge of both RST# and RESETI_, and the falling edge of HS_HEALTHY_ to determine the QSpan II's mode of operation:

- The BDIP_ signal must be pulled low at reset to enable the QSpan II to perform as an MC68360 master. QSpan II responds to MC68360-style slave cycles independent of the state of the SIZ[1] signal at reset (see Chapter 14: "Reset Options" on page 153).
- The SDA and ENID signals should be pulled high if the EEPROM is used. The SDA signal should be pulled low if the serial EEPROM is not used in this design. The ENID signal can be left open if the serial EEPROM is not used as there is an internal weak pull-down resistor.
- The TMODE[1:0] signals can be left open as there are internal pull-down resistors on these pins within the QSpan II. If an in-circuit tester is used during the board manufacturing process then these two signals should be brought out as test points. This allows the in-circuit tester to place the QSpan II in a tri-state/NAND TREE test mode.
- If the BM_EN/FIFO_RDY_ signal is sampled high while RST# is asserted, the QSpan II sets the Bus Master (BM) bit in the PCI_CS register (see Table 70 on page 201). This enables the QSpan II as a PCI bus master. This pin can be left as a no-connect as there is an internal weak pull-down resistor.
- If the PCI_ARB_EN signal is sampled high on the negation of a reset event then the PCI bus arbiter within the QSpan II is enabled. There is an internal pull-down resistor on this pin to maintain backward compatibility.
- If the PCI_DIS signal is sampled high on the negation of a reset event then the QSpan II's PCI interface is disabled. QSpan II will retry any attempted PCI target accesses until the PCI_DIS status bit in the MISC_CTL2 register is cleared (see Table 130 on page 278). There is an internal pull-down resistor on this pin to maintain backward compatibility.

Reset options are described in Chapter 14: "Reset Options" on page 153.

C.1.1.9 Unused Inputs Requiring Pull-Ups

The TS_ and BURST_/TIP_ signals are unused inputs when the QSpan II is interfaced with an MC68360, and therefore, must be pulled high.

C.1.1.10 No Connects

The BM_EN/FIFO_RDY_ signal can be left as a no-connect as there is an internal weak pull-down resistor. In this case, in order for the QSpan II to become a PCI bus master a write to the PCI_CS register is required.

C.1.1.11 JTAG Signals

QSpan II supports JTAG. QSpan II's JTAG signals should be connected to the JTAG controller or to the JTAG signals of another device if devices are to be chained together. If JTAG will not be supported then the JTAG signals can be left open as the inputs have internal pull-up resistors.

© 2019 Renesas Electronics Corporation

C.1.1.12 Address Multiplexing for DRAM

If DRAM is used on the QBus, external address multiplexing is required. This is described in *Motorola's MC68360 User Manual*.

C.1.2 Software Issues

When using the MC68360 with the QSpan II there are register bits which must be altered from the MC68360's default reset state. The register bits should be set as follows:

- Set the Bus Synchronous Timing Mode (BSTM) bit to 1 in the MCR register because the QSpan II is a synchronous bus master.
- Set the Arbitration Synchronous Timing Mode (ASTM) bit to 0 in the MCR register because the QSpan II is not able to meet the MC68360's set-up requirements.

Setting the S_BG and S_BB bits to 1 was a requirement for the QSpan (CA91C860B, CA91L860B) devices. This setting is not required for the QSpan II. However, setting these bits to a 1 will save one clock cycle. If both these bits are set to 1, the QSpan II will synchronously sample the MC68360's arbitration outputs, and the MC68360 will asynchronously sample the QSpan II's arbitration outputs.

C.1.3 MC68360 Slave Mode Interface

If the MC68360 operates in Slave mode — its processor core is disabled — an external QBus arbiter must be used to support arbitration between the MC68360 and the QSpan II. QSpan II's arbitration interface does not support the use of the MC68360's internal bus arbiter when the processing core is disabled. If the processing core is disabled, the external arbiter receives bus requests (BR) from both the MC68360 and QSpan II, and then issues bus grants (BG) back to the appropriate device.

If the MC68360 operates in Slave mode, set the MC68360's SYNC bit to 0 in the GMR register.

© 2019 Renesas Electronics Corporation

C.2 MPC860 Interface

This section describes how the QSpan II can be connected to the MPC860 communications controller (and other MPC8xx devices).

Figure 76: MPC860 Interface

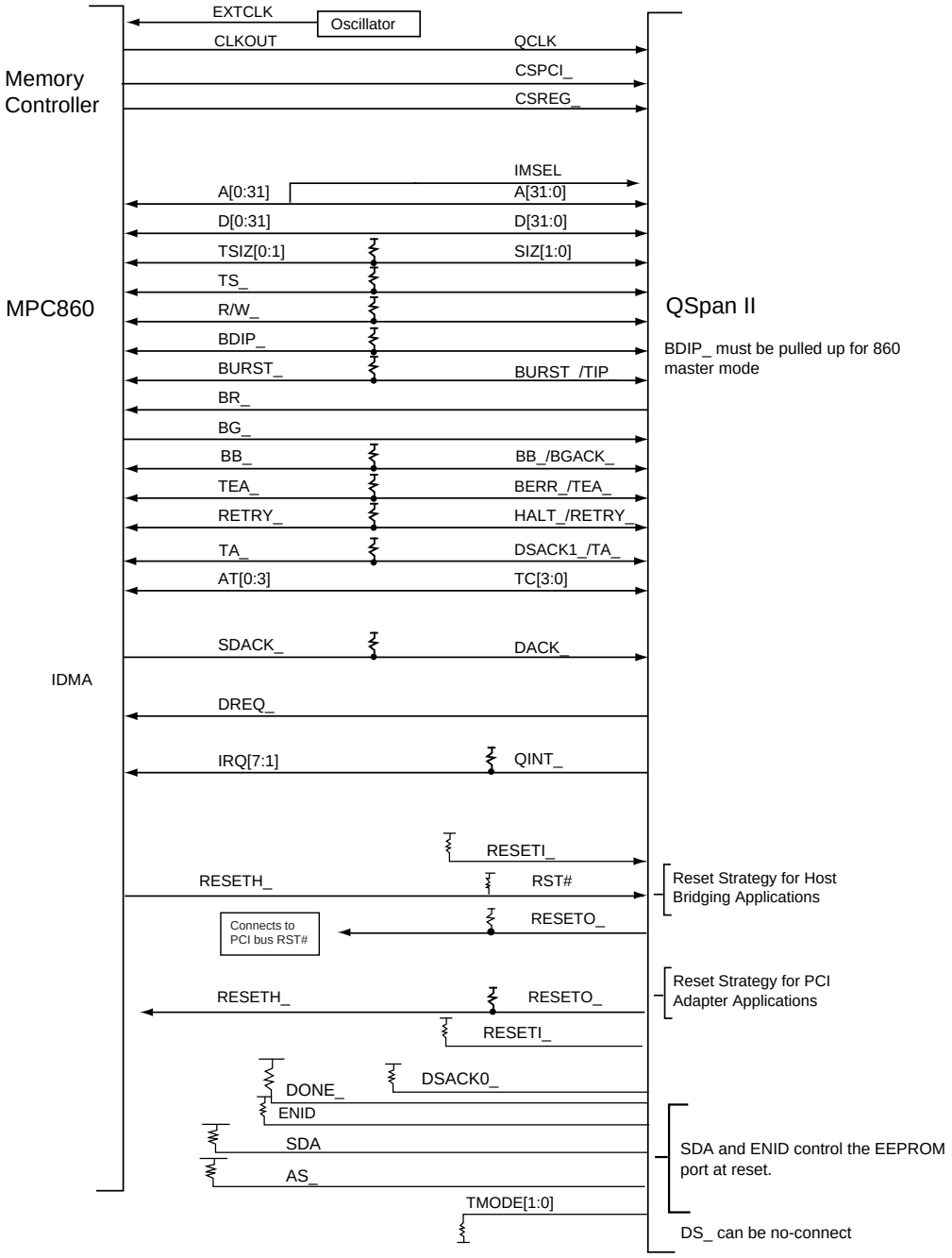

© 2019 Renesas Electronics Corporation

C.2.1 Hardware Interface

C.2.1.1 Clocking

The QSpan II's QCLK input must be derived from the MPC860's CLKOUT signal. All of the AC timing waveforms for the QSpan II are based on this clock output. It is recommended, however, to buffer the CLKOUT signal to the QSpan II with a low skew PLL-based clock buffer because of the low drive strength of the CLKOUT signal.

If an external PLL clock buffer generates the QSpan II's QCLK input, care must be taken to ensure the QSpan II's set-up and hold times are not violated while the PLL clock buffer is locking.

Clocking the QSpan's QCLK Input with a PLL Clock Buffer Chip

QSpan II does not tolerate external bus cycles occurring on the QBus when it does not have a stable clock input.

In the MPC860/QSpan II application shown in Figure 77, the QSpan II may not respond to a register or PCI access if MPC860 bus cycles are occurring when the QSpan II does not have a stable clock.

In this example, the XTAL clock input to the MPC860 is only 4 MHz. The MPC860's PLPRCR register can be written to increase the clock's frequency. When the frequency is increased the MPC860 will stop generating a CLKOUT signal for a period of time while the PLL is locking to this higher frequency. The MPC860 will then continue executing instructions once the CLKOUT signal is stable at this higher frequency. However, the QSpan II will not yet have a stable QCLK input due to the PLL locking requirement of the external PLL Clock buffer chip — the PLL locking time is dependent on the selected clock buffer chip but is typically around 1 ms. During this period while the external PLL is locking, the MPC860 must not perform any cycles on the bus or the QSpan II will not respond to the next register or PCI access.

Figure 77: MPC860/QSpan II Clocking Scheme Example

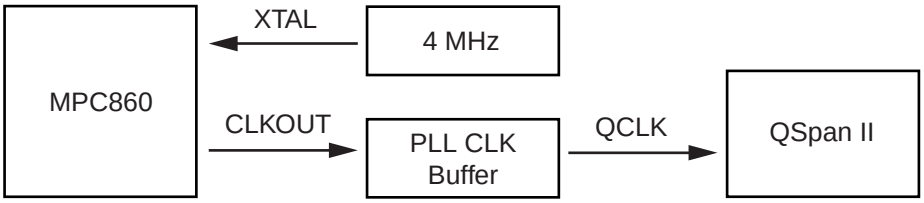

© 2019 Renesas Electronics Corporation

This issue can be eliminated by having the MPC860 execute a delay loop from its instruction cache during this time period. This will prevent the MPC860 from asserting the cycle on the external bus (that is, TS_ will not be asserted). An example of how this code could be implemented is in Figure 78.

Figure 78: Example Code for Executing an MPC860 Delay Loop

```
# R4 Contains IMMR value
      bl icache_unlock_all         # ICache Unlock All
      bl icache_invalidate_all # ICache Invalidate All
      bl icache_enable         # ICache Enable

# prefetch wait_delay subroutine into instruction cache
      li r1, 0x1               # set delay counter for wait_delay subroutine
      bl wait_delay

      li r5,0xA0               # multiply factor from 4MHZ
      b aligned

.align 4                       # align address to 16-bytes boundary
aligned:
      sth r5,PLPRCR(r4)        # set the PLL register
      isync

# delay allows for QSpan II to receive a stable QCLK before external bus
cycles begin
# the actual delay value required is dependent on the PLL clock buffer
device’s locking time
      li r1, 0x7FFF            # set delay counter for wait_delay subroutine
      bl wait_delay

# Simple delay routine, (R1 delay counter input parameter)
wait_delay:
      #
      # execute required delay with R1 parameter
      #
      blr
```

C.2.1.2 Resets

There are three reset scenarios depending on the use of the QSpan II in your application: PCI adapter card bridge, PCI Host bridge, or CompactPCI adapter card supporting Hot Swap.

For a PCI adapter card application use the following reset configuration: connect the QSpan II's reset output (RESETO_) to the hard reset input (RESETH_) on the MPC860. This enables the QSpan II to reset the MPC860 when PCI RST# is asserted or when the software reset bit is asserted (SW_RST bit in the MISC_CTL register on Table 127 on page 274). QSpan II's reset input (RESETI_) is typically unused and should be pulled high through a resistor. HS_HEALTHY_ should be left open as it has an internal pull-down resistor.

© 2019 Renesas Electronics Corporation

For a PCI Host bridge application use the following reset configuration: the QSpan II's PCI RST# (global reset for the QSpan II) input is connected to the hardware reset (RESETH_) on the MPC860. QSpan II's reset output (RESETO_) can be connected to the PCI RST# inputs of the other PCI devices (the QSpan II's RST# input is not connected to the PCI bus RST# signal). Therefore, at power-up the MPC860's power-on-reset circuitry will assert RESETH_ which fully resets the QSpan II. QSpan II will, in turn, assert RESETO_ to reset the agents on the PCI bus when RST# is active.

This reset example also allows the MPC860 processor to reset all of the PCI agents under software control. The MPC860 can write to the software reset bit in the QSpan II's MISC_CTL register, which will cause the QSpan II to assert its RESETO_ signal. QSpan II's reset input (RESETI_) is typically unused and should be pulled high through a resistor. Resets are described in Chapter 14: "Reset Options" on page 153. HS_HEALTHY_ should be left open as it has an internal pull-down resistor.

For a CompactPCI adapter card that supports Hot Swap, use the following reset configuration: the QSpan II's HS_HEALTHY_ input should be connected to the Hot Swap Controller's HEALTHY_ output. Also, connect the QSpan II's reset output (RESETO_) to the hard reset input (RESETH_) on the MPC860. This enables the QSpan II to reset the MPC860 when PCI RST# is asserted, or when the software reset bit is asserted (SW_RST bit in the MISC_CTL register on Table 127 on page 274). QSpan II's reset input (RESETI_) is typically unused and should be pulled high through a resistor.

C.2.1.3 Memory Controller

QSpan II requires that two chip selects be generated in order to access the registers (CSREG_) and the PCI bus (CSPCI_). This can be accomplished by using two of the chip select outputs from the memory controller within the MPC860. There are two QBus slave images within the QSpan II which are used to access the PCI bus. The image that is selected when the PCI chip select is asserted is dependent on the state of the Image Select signal (IMSEL). If IMSEL is low then QBus slave image 0 is selected; otherwise, QBus slave image 1 is selected. IMSEL is typically generated directly from one of the high order address lines on the QBus (for example, dependent on the processor's memory map).

An alternative method is to use a spare I/O port pin on the MPC860 processor to control the QSpan II's IMSEL input pin. If the opposite QBus slave image is desired to be accessed, the MPC860 first performs a write to change the state of this I/O port pin.

C.2.1.4 QBus Direct Connects

The bus interface signals can be directly connected together. External pull-up resistors should be connected to all bus control signals — including SIZ[1] and BDIP_ which are reset options and should be pulled high to support MPC860 mode — to ensure that they are held in the inactive state (see Figure 76 to determine which signals require external pull-ups).

© 2019 Renesas Electronics Corporation

C.2.1.5 Interrupts

QSpan II can pass interrupts between the PCI bus and the QBus. For host bridging applications, the QSpan II can accept INT# as an input and assert QINT_ as an output. QSpan II's interrupt output QINT_) should be connected to one of the seven possible interrupt inputs (IRQ[7:1]) on the MPC860 processor.

For PCI adapter card applications, the QSpan II can accept interrupts from the QBus on the QINT_ pin and pass them through the QSpan II to its PCI INT# output. Interrupts are described in Chapter 8: "The Interrupt Channel" on page 113.

C.2.1.6 PCI Signals

QSpan II's PCI signals can be directly connected to the appropriate PCI signal on the motherboard or the PCI connector. Pull-up resistors may be required to be added to the PCI bus control signals depending on the application. If you are designing a local PCI bus on a motherboard then pull-up resistors will be required (for more information, see the *PCI Specification 2.2*).

For host bridging applications, possible implementations for the QSpan II's IDSEL signal are as follows:

- connect it to a spare AD signal (AD[31:12])
- connect it to ground through a resistor if the host is not required to respond to PCI configuration cycles

The QSpan II supports both 5V and 3.3V I/O signaling environments.

V_H (Highest I/O voltage) must be connected to the highest voltage level the QSpan II I/Os will observe on either the QBus or the PCI bus.

C.2.1.7 EEPROM Interface

A serial EEPROM may be required for applications which must support a Plug and Play environment (for more information about EEPROM reset options see "Reset Options" on page 363). QSpan II also allows that QBus processor to initialize the QSpan II to support a Plug and Play environment (for more information, see "EEPROM Configuration and Plug and Play Compatibility" on page 123).

C.2.1.8 Reset Options

A number of reset options exist with the QSpan II device. The following signals are sampled on the rising edge of both RST# and RESETI_ and the falling edge of HS_HEALTHY_ to determine the QSpan II's mode of operation:

- The BDIP_ and SIZ[1] signals must be pulled high at reset to enable the QSpan II to perform as an MPC860 master and slave (see Chapter 14: "Reset Options" on page 153).
- The SDA and ENID signals should be pulled high if the EEPROM is used. The SDA signal should be pulled low if the serial EEPROM is not used in this design. The ENID signal can be left open if the serial EEPROM is not used as there is an internal weak pull-down resistor.

© 2019 Renesas Electronics Corporation

- The TMODE[1:0] signals can be left open as there are internal pull-down resistors on these pins within the QSpan II. If an in-circuit tester is used during the board manufacturing process then these two signals should be brought out as test points. This allows the in-circuit tester to place the QSpan II in a tri-state/NAND TREE test mode.
- If the BM_EN/FIFO_RDY_ signal is sampled high while RST# is asserted, the QSpan II sets the Bus Master (BM) bit in the PCI_CS register (see Table 70 on page 201). This enables the QSpan II as a PCI bus master. This pin can be left as a no-connect as there is an internal weak pull-down resistor.
- If the PCI_ARB_EN signal is sampled high on the negation of a reset event then the PCI bus arbiter within the QSpan II is enabled. There is an internal pull-down resistor on this pin to maintain backward compatibility.
- If the PCI_DIS signal is sampled high on the negation of a reset event then the QSpan II's PCI interface is disabled. QSpan II will retry any attempted PCI target accesses until the PCI_DIS status bit in the MISC_CTL2 register is cleared (see Table 130 on page 278). There is an internal pull-down resistor to maintain backward compatibility.

Reset options are described in Chapter 14: "Reset Options" on page 153.

C.2.1.9 Unused Inputs Requiring Pull-Ups

The AS_, DSACK0_ and DONE_ signals are unused inputs when the QSpan II is interfaced with an MPC860, and therefore, must be pulled high.

C.2.1.10 No Connects

The DS_ output from the QSpan II should be left as a no connect when the QSpan II is interfaced with an MPC860.

The BM_EN/FIFO_RDY_ can be left as a no-connect as there is an internal weak pull-down resistor. In this case, in order for the QSpan II to become a PCI bus master a write to the PCI_CS register is required.

C.2.1.11 JTAG Signals

QSpan II supports JTAG. QSpan II's JTAG signals should be connected to the JTAG controller or to the JTAG signals of another device if devices are to be chained together. If JTAG will not be supported then the JTAG signals can be left open as the inputs have internal pull-up resistors.

C.2.1.12 Bused Signals

This manual adopts the convention that the most significant bit (address, data, size and transaction codes) is always the largest number. When interfacing the MPC860 to the QSpan II, designers must ensure that they connect the signals accordingly (for example, pin A[31] on the QSpan II connects to pin A[0] on the MPC860).

C.2.1.13 Address Multiplexing for DRAM

Whenever DRAM is used on the QBus, external address multiplexing is required. This is described in the MPC860 UM/AD (REV1).

© 2019 Renesas Electronics Corporation

C.2.1.14 Software Issues

When using the MPC860 with the QSpan II there are a few register bits that must be changed from the MPC860's default reset state. These register bits include the following:

- The MLRC bits in the MPC860's SIUMCR register must be changed to 10 state. This configures the KR/RETRY/IRQ4/SPKROUT pin to function as a RETRY input.
- The SEME bit in the MPC860's SIUMCR register must be set to a 1 because the QSpan II is a synchronous external master.
- The SETA bit in the MPC860's Option register must be set to a 1 for the two QSpan II chip selects (CSREG_ and CSPCI_). QSpan II will always provide the cycle termination to the MPC860.
- The BIH bit in the MPC860's Option register must be set to 1 for the QSpan II's register chip select (CSREG_). QSpan II's PCI chip select (CSPCI_) pin supports burst accesses when using the MPC860's GPCM. Therefore, the BIH bit can be set to either state. The *MPC860 User's Manual* states that the GPCM machine does not support burst accesses, however, with the QSpan II's architecture it will function correctly for the CSPCI_ chip select.

© 2019 Renesas Electronics Corporation

C.3 M68040 Interface

This section describes how the QSpan II can be connected to the M68040.

Figure 79: M68040 Interface

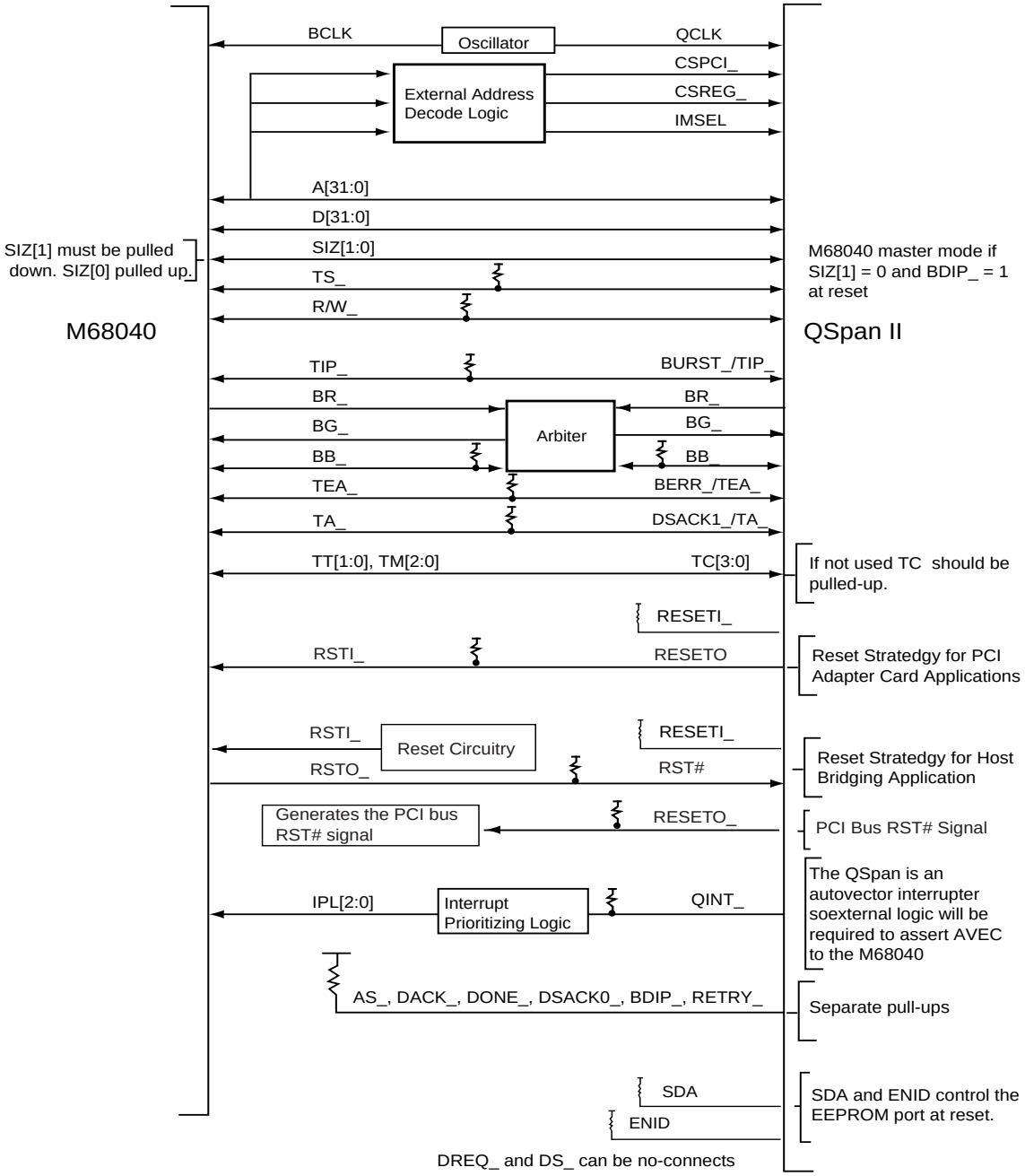

© 2019 Renesas Electronics Corporation

C.3.1 Hardware Interface

QSpan II is compatible with all M68040 variants in large buffer mode up to 40 MHz. QSpan II is compatible with all M68040 variants in small buffer mode up to 33 MHz.

C.3.1.1 Clocking

QSpan II's QCLK input and the M68040's BCLK input should be clocked from the same clock source. The AC timing waveforms for the QSpan II are based on this assumption.

C.3.1.2 Resets

There are three reset scenarios depending on the use of the QSpan II in your application: PCI adapter card bridge, PCI Host bridge, or CompactPCI adapter card supporting Hot Swap.

For a PCI Adapter card application, use the following reset configuration: connect the QSpan II's reset output (RESETO_) to the external reset logic to the reset input (RSTI_) on the M68040. This enables the QSpan II to reset the M68040 processor when PCI RST# is asserted, or when the software reset bit is asserted (SW_RST bit in the MISC_CTL register on Table 127 on page 274). QSpan II's reset input (RESETI_) is normally unused and should be pulled high through a resistor.

For a PCI Host bridge application, use the following reset configuration: the QSpan II’s PCI RST# (global reset for the QSpan II) input is connected to the reset output (RSTO_) on the M68040. QSpan II’s reset output (RESETO_) can be connected to the PCI RST# inputs of the other PCI devices (the QSpan II’s RST# input is not connected to the PCI bus RST# signal). Therefore, at power-up the M68040’s power-on-reset circuitry will assert RSTO_ which fully resets the QSpan II device. QSpan II will assert RESETO_ to reset the agents on the PCI bus when RST# is active.

This reset example also allows the M68040 processor to reset all of the PCI agents under software control. The M68040 can write to the software reset bit in the QSpan II’s MISC_CTL register which will cause the QSpan II to assert its RESETO_ signal. QSpan II's reset input (RESETI_) is normally unused and should be pulled high through a resistor (for more information about resets, see Chapter 14: “Reset Options” on page 153).

For a CompactPCI adapter card application that supports Hot Swap, the QSpan II’s HS_HEALTHY_ signal should be connected to the Hot Swap controller’s HEALTHY_ signal.

© 2019 Renesas Electronics Corporation

C.3.1.3 Address Decoder

QSpan II requires two chip selects and an image select signal (IMSEL) to be generated in order to access the registers (CSREG_) and the PCI bus (CSPCI_). There is no internal memory controller within the M68040 and therefore an external address decoder must be implemented. The IMSEL signal determines which QBus slave image is accessed when CSPCI_ is asserted to the QSpan II. If IMSEL is low then QBus slave image 0 is selected; otherwise QBus slave image 1 is selected. IMSEL is typically dependent on the processor's memory map and is generated directly from one of the high order address lines.

An alternative method is to use a registered output which resides on the QBus. When the opposite slave image must be accessed, the M68040 would first perform a write to change the state of this registered output.

C.3.1.4 QBus Direct Connects

All other bus interface signals can be connected directly together. External pull-up resistors should be connected to all bus control signals — excluding SIZ[1] and BDIP_ which are power-up options and should be pulled to the desired state — to ensure that they are held in the inactive state (see Figure 79 to determine which signals require external pull-ups).

Depending on the version and speed of the M68040 device selected for a design, an extra wait state may need to be inserted on the transfer start signal (TS_). This may be required because the external address decoding circuitry may not be able to generate the chip selects to the QSpan II to meet the input setup requirements.

An alternate solution is to use large output buffer mode in the M68040 to eliminate the need for this wait state. The M68040's output propagation delays are much quicker in this mode and therefore there is more timing margin available for interfacing the QSpan II. However, if large output buffer mode is chosen, it must be used in an unterminated method as the QSpan II's output drivers do not have the ability to drive a 50 ohm transmission line terminated at 2.5V.

QSpan II has four transaction code TC[3:0] signals which can be connected to any four of the five following signals on the M68040: TT[1:0] and TM[2:0].

C.3.1.5 Interrupts

QSpan II device can pass interrupts between the PCI bus and the QBus. For host bridging applications, the QSpan II can accept INT# as an input and assert QINT_ as an output. QSpan II's interrupt output (QINT_) should be connected to the interrupt prioritizing logic which is connected to the IPL[2:0] lines on the M68040 processor. When the M68040 is acknowledging a QSpan II interrupt there must be external logic to terminate the cycle. External logic is required because the QSpan II is an autovector interrupter which does not have the ability to assert AVEC_ or TA_ during the interrupt acknowledge cycle.

For PCI adapter card applications, the QSpan II can accept interrupts from the QBus on the QINT_ pin and pass them through the QSpan II to its PCI INT# output (see Chapter 8: "The Interrupt Channel" on page 113 for more information about interrupts).

© 2019 Renesas Electronics Corporation

C.3.1.6 PCI Signals

QSpan II's PCI signals can be connected directly to the appropriate PCI signal on the motherboard or the PCI connector. Pull-up resistors may be required to be added to the PCI bus control signals depending on the application. If you are designing a local PCI bus on a motherboard then pull-up resistors will be required (for more information, see the *PCI 2.2 Specification*).

For host bridging applications, possible implementations for the QSpan II's IDSEL signal are as follows:

- connect it to a spare AD signal (AD[31:12])
- connect it to ground through a resistor if the host is not required to respond to PCI configuration cycles

The QSpan II supports both 5V and 3.3V I/O signaling environments.

V_H (Highest I/O voltage) must be connected to the highest voltage level the QSpan II I/Os will observe on either the QBus or the PCI bus.

C.3.1.7 EEPROM Interface

A serial EEPROM may be required for applications which must support a Plug and Play environment (for more information about EEPROM reset options, see "Reset Options" on page 363). QSpan II also allows that QBus processor to initialize the QSpan II to support a Plug and Play environment (for more information, see "EEPROM Configuration and Plug and Play Compatibility" on page 123).

C.3.1.8 Reset Options

QSpan II supports a number of reset options. The following signals are sampled on the rising edge of both RST# and RESETI_ to determine the QSpan II's mode of operation.

- The BDIP_ signal must be pulled high and SIZ[1] pulled low at reset to enable the QSpan II to perform as an M68040 master. The SIZ[1] signal must be pulled low at reset in order for the QSpan II to decode an M68040 cycle
- The SDA and ENID signals should be pulled high if the EEPROM is used. The SDA signal should be pulled low if the serial EEPROM is not used in this design. The ENID signal can be left open if the serial EEPROM is not used as there is an internal weak pull-down resistor.
- The TMODE[1:0] signals can be left open as there are internal pull-down resistors on these pins within the QSpan II. If an in-circuit tester will be used during the board manufacturing process then these two signals should be brought out as test points. This would allow the in-circuit tester to place the QSpan II in a tri-state/NAND TREE test mode.
- If the BM_EN/FIFO_RDY_ signal is sampled high while RST# is asserted, the QSpan II sets the Bus Master (BM) bit in the PCI_CS register (see Table 70 on page 201). This enables the QSpan II as a PCI bus master. This pin can be left as a no-connect as there is an internal weak pull-down resistor.

© 2019 Renesas Electronics Corporation

- If the PCI_ARB_EN signal is sampled high on the negation of a reset event then the PCI bus arbiter within the QSpan II is enabled. There is an internal pull-down resistor on this pin to maintain backward compatibility.
- If the PCI_DIS signal is sampled high on the negation of a reset event then the QSpan II's PCI interface is disabled. QSpan II will retry any attempted PCI target accesses until the PCI_DIS status bit in the MISC_CTL2 register is cleared (see Table 130 on page 278). There is an internal pull-down resistor to maintain backward compatibility.

Reset options are described in Chapter 14: "Reset Options" on page 153.

C.3.1.9 Unused Inputs Requiring Pull-Ups

The AS_, DSACK0_, HALT_/TRETRY_, DONE_ and DACK_ signals are unused inputs when the QSpan II is interfaced with a M68040 and therefore must be pulled high.

C.3.1.10 No Connects

The DS_ and DREQ_ outputs from the QSpan II should be left as no connects when the QSpan II is interfaced with a M68040.

The BM_EN/FIFO_RDY_ can be left as a no-connect as there is an internal weak pull-down resistor. In this case, in order for the QSpan II to become a PCI bus master a write to the PCI_CS register is required.

C.3.1.11 JTAG Signals

QSpan II supports JTAG. QSpan II's JTAG signals should be connected to the JTAG controller or to the JTAG signals of another device if devices are to be chained together. If JTAG will not be supported then the JTAG signals can be left open as the inputs have internal pull-up resistors.

© 2019 Renesas Electronics Corporation

Appendix D: Software Initialization

This appendix explains how to initialize the QSpan II. It describes which registers must be configured before you can initiate a transaction through the QSpan II's channels. This appendix also recommends how to set QSpan II's register bits in order to achieve maximum performance.

This appendix discusses the following topics:

- "Miscellaneous Control Register Configuration" on page 378
- "QBus Slave Channel Initialization" on page 380
- "Register Access from the PCI Bus" on page 381
- "PCI Target Channel Initialization" on page 381
- "Error Logging of Posted Transactions" on page 383
- "IDMA/DMA Channel Initialization" on page 384
- "Interrupt Initialization" on page 384
- "Generation of PCI Configuration and IACK Cycles" on page 385
- "EEPROM and VPD Initialization" on page 386
- "I2O Messaging Unit Initialization" on page 386
- "PCI Expansion ROM Implementation" on page 387

© 2019 Renesas Electronics Corporation

D.1 Miscellaneous Control Register Configuration

QSpan II has two general purpose control registers, MISC_CTL and MISC_CTL2, which must be configured for the appropriate application (for example, MPC860 (PowerQUICC), MC68360 (QUICC), and M68040 processors). For more information about the control registers, see Tables 161 and 162.

Table 161: Summary of the QSpan II's Miscellaneous Control Register

Register	Field	Description
MISC_CTL	MSTSLV[1:0]	This field determines the types of cycles the QSpan II Slave Module accepts, and the type of cycles the Master Module generates. Read this field to verify that the QSpan II has powered up in the correct mode of operation.
	QB_BOC	This bit determines whether the QSpan II generates Little-endian or Big-endian QBus cycles (see also INVEND bit in PCI target and DMA control registers).
	S_BG	If using the MPC860's arbiter, use default settings. If using the MC68360's arbiter, then these bits may be altered from their default settings (for example, set to 1). This will improve the performance by saving a clock cycle during arbitration.
	S_BB	
	SW_RST	This bit controls the assertion of RESETO_. Depending on the hardware design, this output can be used to reset the QBus processor.
	MA_BE_D	This bit controls the QSpan II's response to the QBus processor when a Master-Abort occurs on the PCI bus. Set this bit to 1 before the QSpan II performs any PCI Configuration cycles.
	PRCNT	This field controls the amount of data that is prefetched when a PCI burst read occurs to the QSpan II's PCI Target Channel. If the PCI Initiators perform burst read cycles then prefetching should be enabled to improve the system's performance. For more information, see the PCI Target Channel's control registers in Appendix A: "Registers" on page 193.

QSpan II's MISC_CTL2 register bits which affect the device's performance or initialization are shown in Table 162.

© 2019 Renesas Electronics Corporation

Table 162: Summary of the QSpan II's Miscellaneous Control Register 2

Register	Field	Description
MISC_CTL2	PCI_DIS	This bit must be cleared before any PCI Target accesses will complete successfully.
	PTP_IB	This field allows the PCI Target Channel Prefetch Count to be Image Based. Enable this feature if the PCI Initiators have different PCI bursting requirements.
	KEEP_BB	This bit allows the QSpan II to hold onto the QBus for back-to-back cycles. Setting this bit will improve the performance through the QSpan II, however, it will sometimes increase the latency for the QBus processor to obtain the QBus. **Note**: Do not set this bit when the QSpan II DMA channel is used with the PowerQUICC memory controller (UPM).
	MAX_RTRY[1:0]	This field can be set to a non-zero value to allow the QBus processor to detect a cycle which has not completed successfully on the PCI bus.
	PTC_PD	This bit can be set to 1 to allow the QSpan II to signal a PCI disconnect if TRDY# has been negated for more than eight PCI clocks.
	TA_BE_EN	Set this bit to 1 so that the QSpan II will signal a bus error to the QBus processor if a PCI Target-Abort occurs.
	BURST_4	Set this bit to 1 to enable the QSpan II to perform burst cycles in MPC860 applications. For MC68360 and M68040 applications, this bit can be left cleared. Used in conjunction with the BRSTWREN bit in the PBTIx_CTL register (see Table 89 on page 222 and Table 92 on page 226).
	PR_SING	Set this bit to 1 if the memory on the QBus does not support burst accesses. This bit is only applicable when the QSpan II is configured as an MPC860 QBus master.
	PR_CNT2[5:0]	This field controls the amount of data that is prefetched when a PCI burst read occurs through PCI Target Channel 1 of the QSpan II. If the PCI Initiators perform burst read cycles then prefetching should be enabled to improve the system's performance. For more information about the PCI Target Channel control registers, see Appendix A: "Registers" on page 193.
	REG_AC	Set this bit to 1 to improve the system's performance if QSpan II register accesses are occurring from both the QBus and PCI bus.
	NOTO	Set this bit to 1 to improve the system's performance by disabling the PCI transaction ordering rules between the QBus Slave and PCI Target Channels (see "Transaction Ordering Disable Option" on page 76).
	QSC_PW	Set this bit to 1 to improve the posted write performance in the QBus Slave Channel.

© 2019 Renesas Electronics Corporation

The PCI Arbiter Control Register (PCI_ARB) should be initialized if the QSpan II is the PCI Host and its arbiter was enabled at power-up (see the following table).

Table 163: PCI Arbiter Control Register Summary

Register	Field	Description
PARB_CTL	Mx_PRI	This bit selects low or high priority for each PCI master.
	QS_PRI	This bit selects the QSpan II's priority.
	PCI_ARB_EN	Read this status bit to verify whether the QSpan II has powered up with the correct setting for enabling the arbiter.
	PARK	This bit allows you to park the PCI bus at different masters.
	BM_PARK[2:0]	3-bit encoded field to select the master at which to park the bus (see "Bus Parking" on page 142).

D.2 QBus Slave Channel Initialization

To support two QBus (processor) slave images you must program QBus slave image 0 and 1 registers. Once these registers are programmed, the QBus processor can read and write data from the PCI bus.

Table 164: QBus Slave Channel Programming Summary

Register	Field	Description
QBSI0_CTL and/or QBSI1_CTL	PWEN	Set this bit to 1 to allow write transactions to be posted; this will improve system throughput.
	PAS	Sets the PCI bus address space to either Memory or I/O space. Typically, only Memory Space accesses are implemented
	PREN	Enables the QSpan II to perform a burst read on the PCI bus. Set this bit if the QBus processor is often reading from consecutive PCI addresses.
QBSI0_AT and/or QBSI1_AT	EN	This bit enables address translation when set to 1.
	BS[3:0]	Block Size of slave image: affects number of address lines translated, if address translation is enabled
	TA[31:16]	This field allows for independent memory maps to be created for the PCI bus and QBus (EN bit must be set to 1).
PCI_CS	BM	This bit must be set before the QSpan II will initiate any transaction on the PCI bus.

© 2019 Renesas Electronics Corporation

D.3 Register Access from the PCI Bus

QSpan II's PCI Configuration registers are accessible from the PCI Bus in PCI Configuration or Memory Space. QSpan II device specific registers are only accessible in Memory Space. QSpan II's PCI Configuration Registers are accessible without any software initialization requirements. To access the QSpan II device specific registers in PCI Memory Space, configure the bits listed in the following table.

Table 165: Register Access

Register	Field	Description
PCI_CS	MS	Set this bit for the QSpan II to be able to respond to PCI Memory space cycles. (This is a global bit, the PAS bit of each specific image also needs to be set.)
PCI_BSM	BA	Specifies the base address of the PCI memory image for access registers (size of image is 4K)

D.4 PCI Target Channel Initialization

There are two possible memory ranges on the PCI bus which can be used to gain access to QBus memory. These two ranges and the associated registers which need to be programmed to access them are referred to as "target images." Each PCI target image can have independent features as described in the following table. To support two PCI target images, you must program both PCI Target Image 0 and Image 1 registers.

Table 166: PCI Target Image Programming Summary

Register	Field	Description
PCI_CS	MS	Set this bit to allow the QSpan II to respond to PCI Memory space cycles. This is a global bit, the PAS bit of each specific image also needs to be set.
	IOS	Set this bit to allow the QSpan II to respond to PCI I/O space cycles. This is a global bit, the PAS bit of each specific image also needs to be set.

© 2019 Renesas Electronics Corporation

Table 166: PCI Target Image Programming Summary *(Continued)*

Register	Field	Description
PBTI0_CTL and/or PBTI1_CTL	EN	Set this bit to enable the Target image.
	PWEN	Set this bit to 1 to allow write transactions to be posted; this improves system throughput.
	PREN	Set this bit if the PCI Initiator is attempting to perform PCI burst reads. This bit is used in conjunction with the PRCNTx field in the MISC_CTL and MISC_CTL2 registers.
	BRSTWREN	Set this bit to enable the QSpan II to perform burst transactions when configured as an MPC860 QBus master. See also the BURST_4 bit in the MISC_CTL2 register on Table 130 on page 278.
	INVEND	This bit Inverts the endian state from the state of the QB_BOC bit.
	BS[3:0]	Block Size of Target Image (affects number of address lines translated).
	PAS	This bit allows the PCI Target Image to respond to a Memory or I/O cycle. Typically, only Memory Space is implemented.
	TC[3:0]	This field determines how the TC[3:0] lines of the QSpan II are driven.
	DSIZE[1:0]	This field specifies the size of the destination port/memory on the QBus.
PBTI0_ADD[a] and/or PBTI1_ADD	BA[31:16]	This field specifies the base address of the PCI memory image which the QSpan II monitors (see “Address Translation” on page 62).
	TA[31:16]	This field specifies part of the value for the translated local address (see “Address Translation” on page 62).

a. See also PCI_BST0 and PCI_BST1 registers in Appendix A: “Registers” on page 193.

Once the target images are programmed, PCI masters can read from and write to the QBus address space.

© 2019 Renesas Electronics Corporation

D.5 Error Logging of Posted Transactions

QSpan II has registers which allow the processor to recover from a failed write cycle from either the Px-FIFO or Qx-FIFO. This section discusses posted writes; delayed reads and delayed writes are treated differently. QSpan II has the ability to log the failed posted write cycle and generate an interrupt back to the PCI master or the QBus processor. See “Terminations of Posted Writes” on page 82 for an explanation of error recording in the PCI Target channel.

Table 167: QBus Error Logging Programming Summary

Register	Field	Description
QB_ERRCS	ES	Indicates if a failed cycle is currently logged.
	EN	Enables error logging.
	TC_ERR[3:0]	Logs the status of the TC[3:0]of the failed cycle.
	SIZ_ERR[1:0]	Logs the SIZ[1:0] field of the failed cycle.
QB_AERR	QAERR[31:0]	Logs the 32-bit address of the failed transaction.
QB_DERR	QDERR[31:0]	Logs the 32-bits of data for the failed transaction.

Similarly, error logging can be enabled for the QBus Slave Channel (see the following table).

Table 168: PCI Bus Error Logging Programming Summary

Register	Field	Description
PB_ERRCS	ES	Indicates if a failed cycle is currently logged.
	EN	Enables error logging.
	UNL_QSC	Allows the PCI Interface to serve the QBus Slave Channel after an error is logged.
	CMD_ERR[3:0]	Logs the PCI command for the failed cycle.
	BE_ERR[3:0]	Logs the status of the Byte Enables for the failed cycle.
PB_AERR	PAERR[31:0]	Logs the 32-bit address of the failed transaction.
PB_DERR	PDERR[31:0]	Logs the 32-bits of data for the failed transaction.

© 2019 Renesas Electronics Corporation

D.6 IDMA/DMA Channel Initialization

The IDMA/DMA Channel has a single FIFO which can perform burst writes or burst reads on the PCI Bus. During an IDMA cycle, the QSpan II is an IDMA peripheral while either the MC68360 or the MPC860 is the bus master of the cycle. The MC68360 or the MPC860 must program three registers in order to initiate an IDMA transfer. During DMA transfers, the QSpan II is the master on both the QBus and the PCI Bus.

See Chapter 5: “The IDMA Channel” on page 83 and Chapter 6: “The DMA Channel” on page 93 for more information about register programming.

Table 169: IDMA/DMA Channel Programming Summary

Register	Field	Description
IDMA/ DMA_PADD	ADDR[31:2]	The starting address of the IDMA/DMA transaction on the PCI bus.
IDMA/ DMA_CNT	CNT[23:2]	This register specifies the number of bytes which will be transferred.
IDMA/ DMA_CS	(various)	Fields in this register should be set according to the transaction requirements (see Table 109 on page 246.)
DMA_QADD	Q_ADDR[31:2]	The starting address of the DMA transaction on the QBus.
DMA_CS	(various)	Fields in this register should be set according to the transaction requirements (see Table 113 on page 252).
PCI_CS	BM	Enables the QSpan II to become the PCI bus master

Interrupts can be generated based on different IDMA or DMA event types. The status bits in the IDMA_CS or DMA_CS register will cause an interrupt if enabled in the INT_CTL register (see Chapter 8: “The Interrupt Channel” on page 113)

D.7 Interrupt Initialization

QSpan II has many different interrupting capabilities (See Chapter 8: “The Interrupt Channel” on page 113 for a detailed discussion). These interrupt capabilities include: software doorbells, mailboxes, error conditions, DMA completion, I_2O, power management, and hardware interrupt sources. There are enable bits for each interrupt source (INT_CTL register), interrupt direction (QBus or PCI) bits for each source (INT_DIR register), and interrupt status bits for each source in the INT_STAT register.

© 2019 Renesas Electronics Corporation

D.8 Generation of PCI Configuration and IACK Cycles

QSpan II can generate PCI Configuration cycles through a QBus master accessing QSpan II registers. In order to generate a PCI Configuration read or write cycle, two registers must be accessed. First, the Configuration Address register must be programmed. Second, a write to the CON_DATA register is performed which causes the PCI configuration write cycle to occur on the bus. In order to generate a PCI Configuration read the QBus master should perform a read of the CON_DATA Register (see "PCI Configuration Cycles Generated from the QBus" on page 108).

In order to generate a PCI IACK Cycle, the QBus processor should perform a read of the IACK Cycle Generator Register (see "IACK_GEN" on page 259).

Table 170: PCI Configuration and IACK Cycle Programming Summary

Register	Field	Description
CON_ADD	BUS_NUM[7:0]	See the *PCI 2.2 Specification* and the QSpan II register descriptions.
	DEV_NUM[3:0]	
	FUNC_NUM[2:0]	
	REG_NUM[5:0]	
	TYPE	Determines whether the Configuration cycle generated is Type 0 or Type 1.
CON_DATA	CDATA[31:0]	When this register is written to its contents are driven onto the PCI data bus during a Configuration write cycle. The QBus master is retried until the write completes on the PCI bus (for example, writes are delayed transactions). A read of this register initiates a PCI Configuration read cycle. The value returned from the PCI target is stored temporarily in this register while waiting for the QBus master to perform an additional read to obtain the data (for example, reads are also implemented as delayed transactions).
MISC_CTL	MA_BE_D	This bit should be set to 1 so that when a PCI Master-Abort occurs during a PCI Configuration cycle a normal data acknowledgement is signaled to the QBus processor.
IACK_GEN	IACK_VEC	When the register is read, the QSpan II will perform a PCI IACK Cycle. The QBus master is retried until the cycle completes on the PCI Bus. The value from the PCI IACK is stored temporarily in this register while waiting for the QBus master to perform an additional read to obtain the vector.

© 2019 Renesas Electronics Corporation

D.9 EEPROM and VPD Initialization

Many of the QSpan II's operating parameters can be set by a serial EEPROM (see Chapter 9: "The EEPROM Channel" on page 121). It is possible to program the serial EEPROM by accessing a QSpan II register (EEPROM_CS). It is possible to program Vital Product Data (VPD) information into the serial EEPROM by writing to the PCI_VPD register. For additional programming details about EEPROM and VPD, see Chapter 9: "The EEPROM Channel" on page 121.

D.10 I_2O Messaging Unit Initialization

To initialize the I_2O Messaging Unit, complete the following steps:

1. Start the QSpan II in PCI disable mode by setting the PCI_DIS bit to 1 in the MISC_CTL2 register (see Table 130 on page 278).
2. Set the PCI_CLASS register from the EEPROM or the QBus processor (see Table 71 on page 204).
3. Set the I2O_EN bit to 1 in the I2O_CS register (see Table 100 on page 236).

   This bit moves the PCI_BSM register to offset 018h.
4. Clear the I20_EN bit.
5. Enable PCI access by clearing the PCI_DIS bit in the MISC_CTL2 register.

   This allows the PCI Host to create the PCI memory map.
6. The QBus processor initializes the I_2O Messaging Unit.
7. Set the I2O_EN bit to 1.

© 2019 Renesas Electronics Corporation

D.11 PCI Expansion ROM Implementation

An Expansion ROM can be implemented on the QBus which will contain additional information for the PCI host. In order for the PCI host to be able to read from this ROM, the base address of this image must be programmed. This address can be programmed from an external serial EEPROM.

Table 171: PCI Expansion ROM programming

Register	Field	Description
PCI_CS	MS	Set this bit before accessing the ROM.
PCI_BSROM	BA[31:16]	This field defines the base address for the expansion ROM.
	EN	Set this bit in order to use the expansion ROM image.
PBROM_CTL	DSIZE[1:0]	This field defines the size of the Expansion ROM (read only field, programmed by serial EEPROM.
	BS[2:0]	This field defines the block size of the Expansion ROM image (read only, programmed by serial EEPROM.
	TC[3:0]	This field defines how the QSpan II drives the TC lines (read only, programmed by serial EEPROM.
	TA[31:16]	This field defines the Translation Address field (read only, programmed by serial EEPROM.

© 2019 Renesas Electronics Corporation

© 2019 Renesas Electronics Corporation

Appendix E: Endian Mapping

This appendix explains Endian Mapping for the QSpan II and Motorola processors. The following topics are discussed:

- "Big-Endian System" on page 390
- "Little-Endian System" on page 391
- "Endian Mapping Methods" on page 392

E.1 Overview

The PCI bus and the Motorola processors have some differences because of their unique evolutionary histories. PCI was born in the Intel world, making it Little-Endian, while the Motorola processors used Big-Endian.

© 2019 Renesas Electronics Corporation

E.2 Big-Endian System

In a Big-Endian system, the most significant byte is located at the lowest address in memory. When data is moved to the data bus, the least significant byte is moved to the lowest byte lane (Byte 3 in lowest byte lane) and the most significant byte is moved to the highest byte lane (Byte 0 in highest byte lane). The following figure shows a 4-byte operand being moved to the data bus in a Big-Endian system.

Figure 80: Big-Endian System

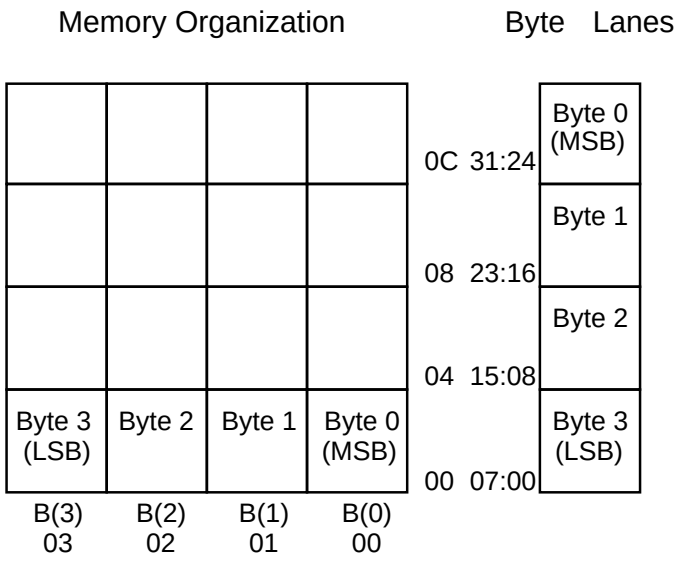

© 2019 Renesas Electronics Corporation

E.3 Little-Endian System

In a Little-Endian system, the most significant byte is located at the highest address location. When data is moved to the data bus, the least significant byte is moved to the lowest byte lane (Byte 0 in lowest byte lane) and the most significant byte is moved to the highest byte lane (Byte 3 in highest byte lane). It is important that the PCI bridge provides flexibility in how endian systems are mapped across the interface. The following figure shows a 4-byte operand being moved to the data bus in a Little-Endian system.

Figure 81: Little-Endian System

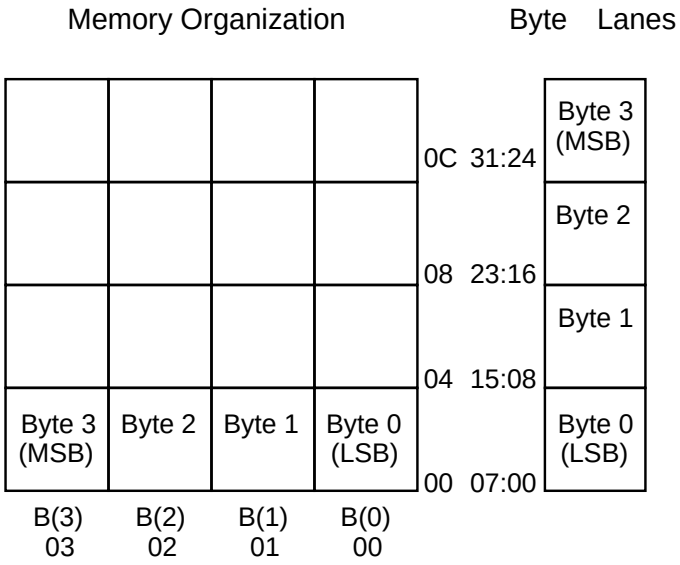

Some host bus adapters (for example, SCSI) for the PCI environment expect their descriptor blocks to be stored in main memory in Little-Endian format. This means that a PCI-to-Motorola bridge must provide a flexible endian mapping scheme to allow for PCI adapter control information to be stored in Motorola memory.

© 2019 Renesas Electronics Corporation

E.4 Endian Mapping Methods

There are two standard approaches to endian mapping in a PCI-to-Motorola bridge: address invariance and data invariance. A third approach involves using a combination of both methods.

E.4.1 Address Invariance

With address invariance, the addressing of the bytes in memory is preserved. The following figure shows that by performing byte-lane swapping, the bytes appear in the same address but their relative significance is not preserved. This method works for text information but scrambles operands.

Figure 82: Address Invariant Mapping

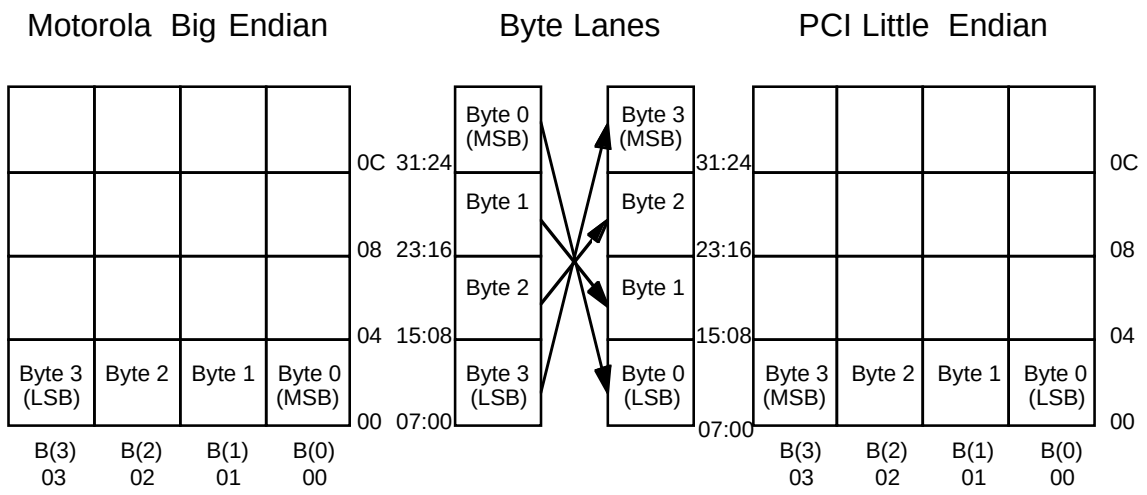

© 2019 Renesas Electronics Corporation

E.4.2 Data Invariance

The second approach is data invariance, which preserves the relative byte significance but translates the byte addressing. The following figure shows that with data invariance, Byte 0 is still the most significant byte in the data structure but is now located at address 03 in memory rather than address 00.

Figure 83: Data Invariant Mapping

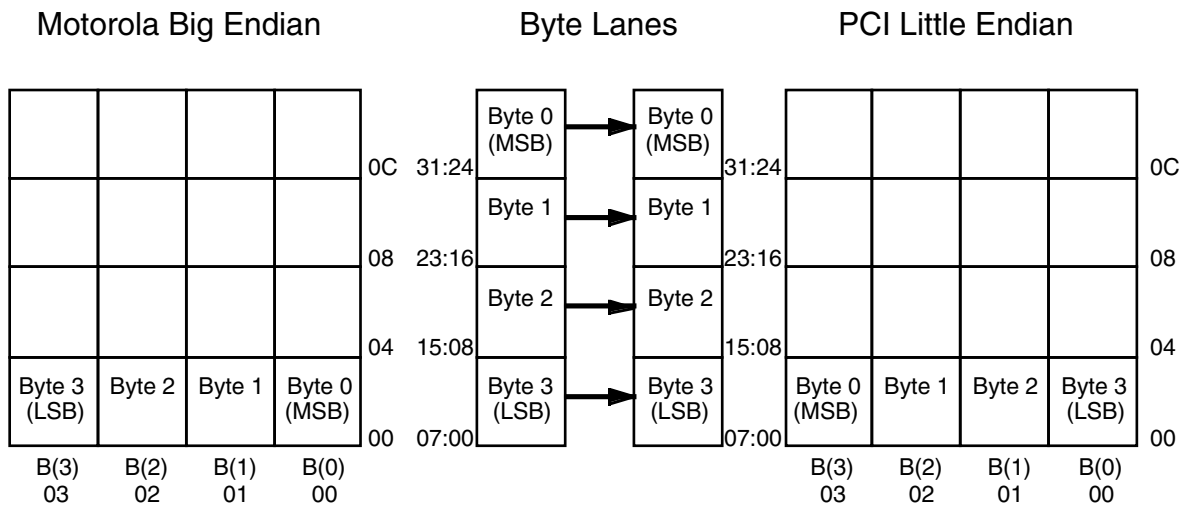

E.4.3 Combined Method

By enforcing certain constraints on the system, it is possible to implement both options in a PCI-to-Motorola bridge. By assuming that all data structures are 32-bit integers, the bridge could be powered up in either of these mapping modes. In address invariant mode, byte lanes would be swapped (independent of the data path width) assuming that the bytes are part of a 32-bit word. In data invariant mode, the byte lanes would be passed straight through assuming that the bytes are again part of a 32-bit word.

© 2019 Renesas Electronics Corporation

© 2019 Renesas Electronics Corporation

Chapter 18: Operating and Storage Conditions

This appendix discusses operating and storage conditions for the QSpan II. The following topics are discussed:

- "Power Dissipation" on page 395
- "Operating Conditions" on page 396
- "Thermal Characteristics" on page 396

18.1 Power Dissipation

Table 172: Power Dissipation

QCLK[a]	Minimum	Typical	Maximum
25 MHz	0.28W	0.50W	0.63W
40 MHz	0.33W	0.58W	0.75W
50 MHz	0.38W	0.63W	0.90W

a. PCI clock always runs at 33 MHz.

© 2019 Renesas Electronics Corporation

18.2 Operating Conditions

Table 173: 3.3 Volt Absolute Maximum Ratings

Symbol	Parameter	Rating	Units
V_{DD}	DC Supply Voltage	-0.5 to 7.0	V
V_{IN}	DC Input Voltage	-0.3 to 5.3[a b]	V
I_{IN}	DC Input Current	±10	mA
T_{STG}	Storage Temperature	-40 to +125	°C

a. Power available on V_{IO} without power to V_{DD} (V_{IN}) can result in reliability impact.

b. QSpan II is 5V tolerant on all pins.

Table 174: 3.3 Volt Recommended Operating Conditions

Symbol	Parameter	Rating	Units
V_{DD}	DC Supply Voltage	3.0 to 3.6	V
T_C	Commercial Temperature	0 to 70	°C
T_I	Industrial Temperature	-40 to 85	°C

18.3 Thermal Characteristics

The maximum ambient temperature of the QSpan II can be calculated as follows:

$Ta \leq Tj - \theta_{ja} * P$

Where,

T_a = Ambient temperature (°C)

T_j = Maximum QSpan II Junction temperature (°C) = 125°C

θ_{ja} = Junction to Ambient Thermal Impedance (°C / Watt) see Table 175.

P = QSpan II power consumption (Watts), see Table 172.

© 2019 Renesas Electronics Corporation

The junction to ambient thermal impedance (θ_{ja}) is dependent on the air flow in meters per second over the QSpan II (see Table 175).

Table 175: Junction to Ambient Characteristics

Wind Speed (m/s)	Package		Unit
	27 mm	17 mm	
0	35.0	29.7	θ_{ja} °C/W
1	32.4	25.8	θ_{ja} °C/W
2	29.9	24.2	θ_{ja} °C/W

© 2019 Renesas Electronics Corporation

© 2019 Renesas Electronics Corporation

Appendix F: Mechanical Information

This appendix discusses mechanical (packaging) information for the QSpan II.

F.1 Mechanical Information

The following mechanical information is discussed:

- QSpan II PBGA: 256-ball configuration, 17 mm package
- QSpan II PBGA: 256-ball configuration, 27 mm package

F.1.1 256 PBGA — 17 mm

Table 176: 256 PBGA — 17 mm Packaging Features

Feature	Description
Package Type	2 layer, 256 terminal Plastic Ball Grid Array (PBGA)
Package Body Size	17 X 17 mm
JEDEC Specification	MO-151 Variation AAF-1

© 2019 Renesas Electronics Corporation

Figure 84: 256 PBGA, 17 mm — Top and Side Views

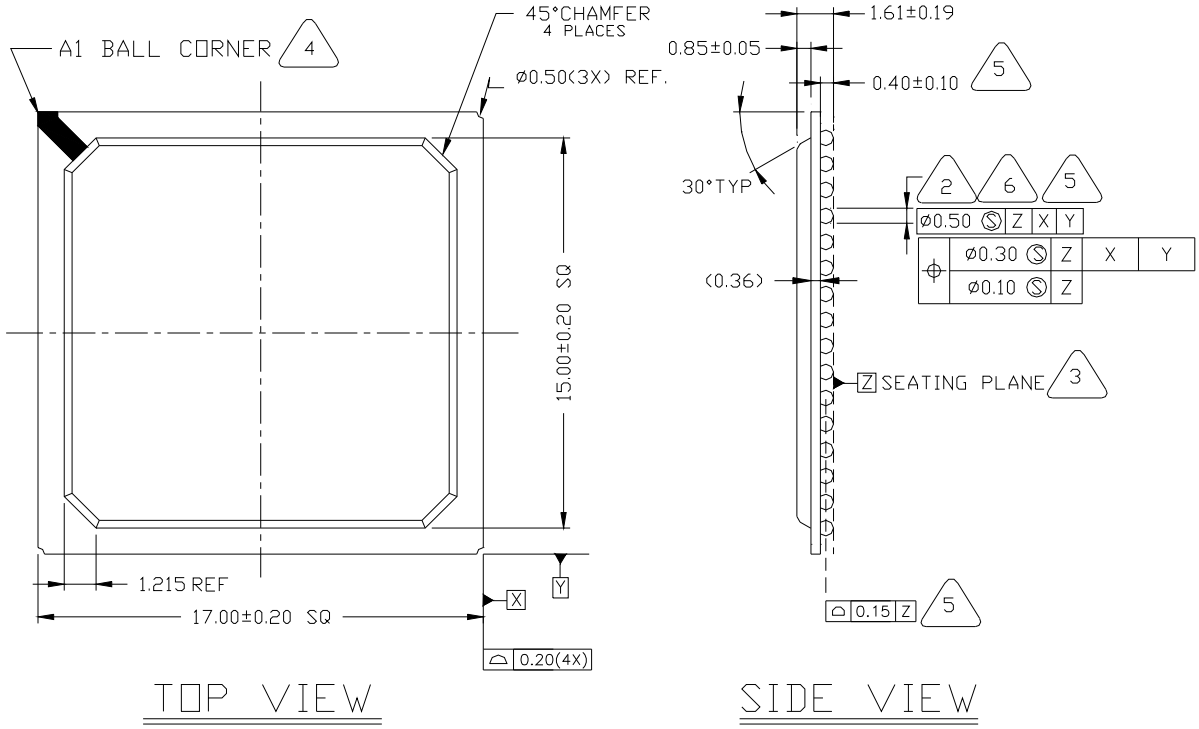

F.1.1.1 PBGA Notes — 17 mm

1. All dimensions conform to ANSI Y14.5-1994. Dim in millimeters (mm).
2. Measured at the maximum solder ball diameter parallel to primary datum Z.
3. Primary datum Z and seating plane are defined by the spherical crowns of the solder balls.
4. A1 Corner is identified by chamfer, ink mark, metallized mark, indentation or other feature of the package body or lid.
5. Reference Specification: QSpan II conforms to Jedec Registered Outline drawing MO-151 Variation AAF-1, except for these dimensions.
6. Ball pad is 0.4 mm diameter. IDT recommends customer’s PCB pad have same diameter.

© 2019 Renesas Electronics Corporation

Figure 85: 256 PBGA, 17 mm — Bottom View

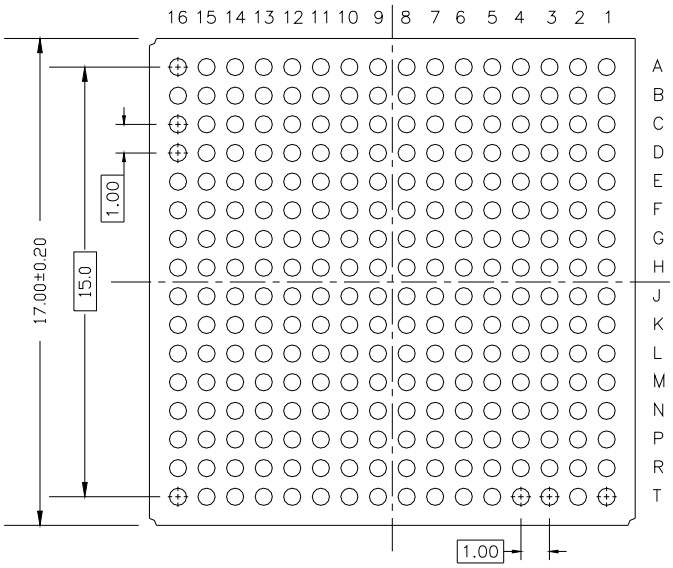

F.1.2 256 PBGA — 27 mm

Table 177: 256 PBGA — 27 mm Packaging Features

Feature	Description
Package Type	256 terminal Plastic Ball Grid Array (PBGA), (1) power and (1) ground plane
Package Body Size	27 X 27 mm
JEDEC Specification	MO-151 Variation BAL-2

© 2019 Renesas Electronics Corporation

Figure 86: 256 PBGA, 27 mm — Top and Side Views

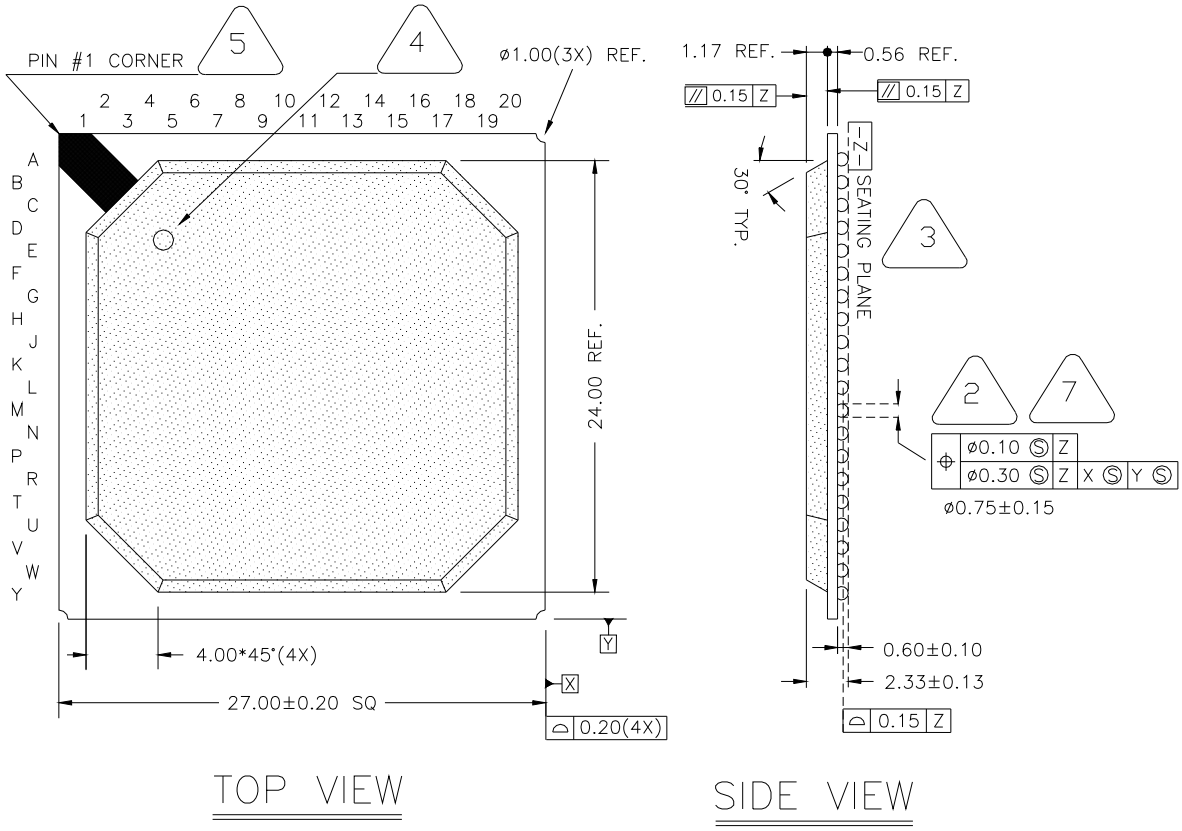

F.1.2.1 PBGA Notes — 27 mm

1. All dimensions conform to ANSI Y14.5-1994. Dim in millimeters (mm).
2. Measured at the maximum solder ball diameter parallel to primary datum Z.
3. Primary datum Z and seating plane are defined by the spherical crowns of the solder balls.
4. A1 Ball Corner ID. Marked in ink for plate mold. Indent if Automold.
5. A1 Corner is identified by chamfer, ink mark, metallized mark, indentation or other feature of the package body or lid.
6. Reference Specification: QSpan II conforms to Jedec Registered Outline drawing MO-151.
7. Ball pad is 0.60 mm diameter. IDT recommend's customer's PCB pad has same diameter.

© 2019 Renesas Electronics Corporation

Figure 87: 256 PBGA, 27 mm — Bottom View

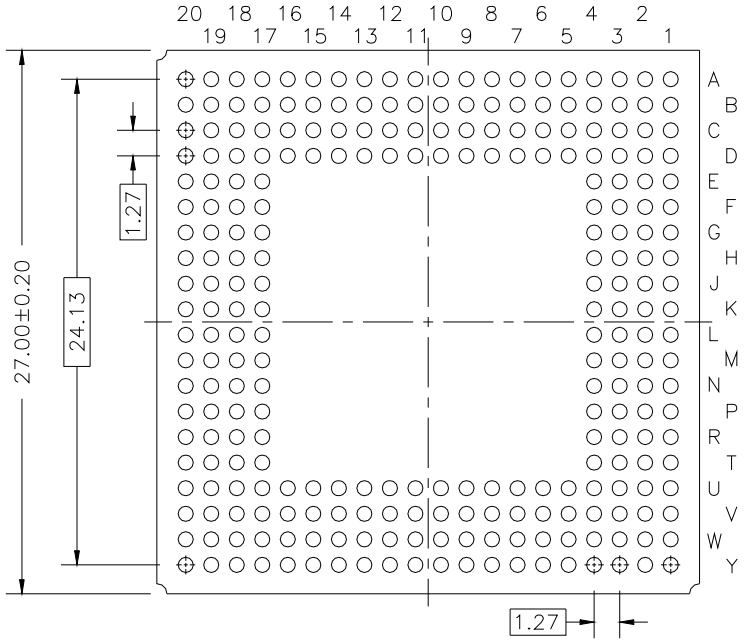

© 2019 Renesas Electronics Corporation

© 2019 Renesas Electronics Corporation

Appendix G: Ordering Information

This appendix discusses ordering information for the QSpan II.

G.1 Ordering Information

Table 178: Ordering Information

Part Number	Frequency[a]	Voltage[b]	Temperature	Package
CA91L862A-50IL	33MHz MC68360 50MHz MPC860	3.3V	-40° to 85°C	17 mm PBGA
CA91L862A-50ILV	33MHz MC68360 50MHz MPC860	3.3V	-40° to 85°C	17 mm PBGA
CA91L862A-50IE	33MHz MC68360 50MHz MPC860	3.3V	-40° to 85°C	27 mm PBGA
CA91L862A-50IEV	33MHz MC68360 50MHz MPC860	3.3V	-40° to 85°C	27 mm PBGA

a. The QSpan II is compatible with all M68040 variants in large buffer mode up to 40 MHz. The QSpan is compatible with all M68040 variants in small buffer mode up to 33 MHz.

b. The QSpan II supports universal PCI (3.3/5V tolerant inputs and 3.3/5V compliant output signaling).

© 2019 Renesas Electronics Corporation

G.2 Part Numbering Information

The IDT “CA” part numbering system is explained as follows.

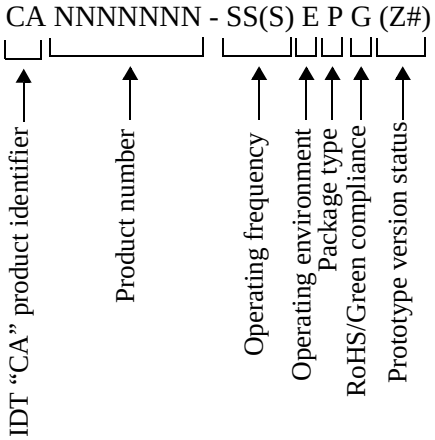

- ( ) – Indicates optional characters.
- CA – IDT product identifier.
- NNNNNNN – Product number
- SS(S) – Maximum operating frequency of the fastest interface in MHz. If the speed of this interface exceeds 999 MHz then the number will be followed by a G, for GHz (for example, a 10-GHz part would be marked as 10G).
- E – Operating environment in which the product is guaranteed. This code may be one of the following characters:
  - C - Commercial temperature range (0 to +70°C)
  - I - Industrial temperature range (-40 to +85°C)
  - E - Extended temperature range (-55 to +125°C)
  - J - Junction rated temperature range (0 to 105°C)
  - K - Junction rated extended temperature range (-40 to 105°C)
- P – The Package type of the product:
  - B - Ceramic ball grid array (CBGA)
  - E - Plastic ball grid array (PBGA)
  - G - Ceramic pin grid array (CPGA)
  - J - Ultra ball grid array (EBGA), 1 mm pitch
  - K - Ultra ball grid array (EBGA), 1.27 mm pitch
  - L - Plastic ball grid array (PBGA), 1 mm pitch
  - M - Small outline integrated circuit (SOIC)
  - Q - Plastic quad flatpack

© 2019 Renesas Electronics Corporation

- G – IDT “CA” products fit into one of three RoHS-compliance categories:
  - Y - RoHS Compliant (6of6) – These products contain none of the six restricted substances above the limits set in the EU Directive 2002/95/EC.
  - Y - RoHS Compliant (Flip Chip) – These products contain only one of the six restricted substances: Lead (Pb). These flip-chip products are RoHS compliant through the Lead exemption for Flip Chip technology, Commission Decision 2005/747/EC, which allows Lead in solders to complete a viable electrical connection between semiconductor die and carrier within integrated circuit Flip Chip packages.
  - V - RoHS Compliant/Green - These products follow the above definitions for RoHS Compliance and are denoted as Green as they contain no Halogens.
- Z# – Prototype version status (optional). If a product is released as a prototype then a “Z” is added to the end of the part number. Further revisions to the prototype prior to production release would add a sequential numeric digit. For example, the first prototype version of device would have a “Z,” a second version would have “Z1,” and so on. The prototype version code is dropped once the product reaches production status.

© 2019 Renesas Electronics Corporation

© 2019 Renesas Electronics Corporation

Glossary

CompactPCI	CompactPCI is an adaptation of the PCI Specification for Industrial and embedded applications requiring a more robust mechanical form factor than desktop PCI.
Cycle	Cycle refers to a single data beat; a transaction is composed of one or more cycles.
DMA	Direct Memory Access. A process for transferring data from main memory to a device without passing it through the Host processor.
Master	Master (initiator) is the owner of the PCI bus. It is used for both the QBus and the PCI bus.
QBus	QBus is a generic term which refers to the interface between the QSpan II and the Host processor bus to which QSpan II is connected.
Slave	Slave (target) is the device which is accessed by the bus master. It is reserved for addresses accessed by PCI masters.
Slave Image	Slave image is a memory range which is mapped on the QBus (Host processor bus). Two slave images reside in the QSpan II QBus Slave Channel.
Target image	Target image is a memory range which is mapped on the PCI bus. Two target images reside in the QSpan II PCI Target Channel.

© 2019 Renesas Electronics Corporation

© 2019 Renesas Electronics Corporation

Index

Numerics

17 x 17 mm package 399
27 x 27 mm package 401

A

A[31:0] 161, 165, 169, 181
ACT bit
    EEPROM_CS Register 277
    IDMA/DMA_CS Register 246
AD[31:0] 172, 181
ADDR field
    EEPROM_CS Register 277
    IDMA/DMA_PADD Register 249, 384
Address Phase
    Configuration Cycle 109, 256
    IDMA Channel 85, 87
    QBus 37–41
Address Translation
    PCI Target Channel 62
    QBus Slave Channel 40
APS bit
    PCI_PMC Register 217
Arbitration
    PCI bus 40
    QBus 76–78, 162, 165
    Register Channel 103
Arbitration Scheme
    PCI Bus Arbiter 140
AS_ 37, 39, 161, 181, 322
Assigning the Base Address 59, 62
AT[0:3] 165
AVEC_ 362, 374

B

BA bit
    PCI_BSM Register 381
BA field
    I2O_BAR Register 207
    PBTI0_ADD Register 224, 382
    PBTI1_ADD Register 228, 382
    PCI_BSM Register 206
    PCI_BSROM Register 213, 387
    PCI_BST0 Register 208
    PCI_BST1 Register 210
BASE field
    PCI_CLASS Register 204
BB_/BGACK_ 78, 79, 161, 165, 169, 181
BDIP_ 57, 73, 156, 161, 165, 169, 181, 363, 368
BE_ERR field
    PB_ERRCS Register 232, 383
BERR_/TEA_ 79, 162, 165, 169, 181
BG_ 76, 77, 78, 162, 165, 170, 181
BGACK_ 161
BISTC bit
    PCI_MISC0 Register 205
BM bit
    PCI_CS Register 108, 203, 384
BM_EN/FIFO_RDY_ 162, 166, 170, 181, 363
BM_PARK field
    PARB_CTL Register 281, 380
Boundary scan support 25
BR_ 76, 77, 78, 162, 166, 170, 181
BRSTEN bit
    DMA_CS Register 253
BRSTWEN bit
    PBTI0_CTL Register 382
    PBTI1_CTL Register 382
BRSTWREN bit
    Bursting on the QBus 73
    PBTI0_CTL Register 222
    PBTI1_CTL Register 226
BS field
    PBROM_CTL Register 230, 387
    PBTI0_CTL Register 222, 382

© 2019 Renesas Electronics Corporation

PBTI1_CTL Register 226, 382
QBSI0_AT Register 285, 380
QBSI1_AT Register 289, 380
Burst Transfer
PCI Target Channel 72–76
target-disconnect 80, 81
QBus Slave Channel 39, 51, 284, 287, 288
translation 44
write 47
BURST_/TIP_ 166, 170, 181
BURST_4 bit
DMA_CS Register 253
MISC_CTL2 Register 279, 379
Bus Error 32
burst 284, 288
IDMA 89, 89–91, 246, 260
INT_CTL register 263
INT_DIR register 266
INT_STAT register 260
logging (PCI Target Channel) 82
logging (QBus Slave Channel) 54
PB_DERR register 235
PB_ERRCS register 232
PCI Master Module 53
QB_ERRCS register 291
QBus Master Module 79
QBus Slave Module 51, 284, 288
burst 47, 48
signaling 52
QBus Slave Module (signaling) 52
translation (PCI Target Channel) 82
Bus Parking 40, 142
PCI Bus Arbiter 142
Bus Request 181
PCI bus 40, 174, 183
QBus 76, 162, 165
BUS_NUM field
CON_ADD Register 256, 385
Byte Lane (EEPROM) 127

C

C/BE[1] 181
C/BE[2] 181
C/BE[3] 181
C/BE#[3:0] 43, 172, 181
Cacheline 72, 81
CAP_ID field
CPCI_HS Register 219
PCI_PMC Register 217
PCI_VPD Register 220
CAP_L bit
PCI_CS Register 202
CAP_PT field
PCI_CP Register 215
Capacitors 158
CCODE field
PCI_MISC0 Register 205
CDATA field
CON_DATA Register 258, 385
CHAIN bit
IDMA/DMA_CS Register 247
Chip Select 162, 166, 170, 173
CLINE field
PCI_MISC0 Register 205
CLKO1 359
Clocking
M68040 373
PowerQUICC 366
QUICC 359
CMD bit
IDMA/DMA_CS Register 246
CMD_ERR field
PB_ERRCS Register 232, 383
CNT field
IDMA/DMA_CNT Register 250, 384
CompactPCI Hot Swap
Card Extraction 147
Card Insertion 145
CompactPCI Hot Swap Friendly 143
CON_ADD Register 256
DEV_NUM field 109
FUNC_NUM field 109
REG_NUM field 109
TYPE bit 109
CON_DATA Register 258
CDATA field 109
Configuration Space
from PCI bus 62
from PCI bus (how to access) 385
from QBus 30, 37, 43, 47
from QBus (how to access) 108–110
IDMA Channel 84
PCI Target Channel 105
Register Channel 103
CP_LOC bit

© 2019 Renesas Electronics Corporation

DMA_CS Register 253
CPCI_HS Register 219
CPP field
DMA_CPP 255
CSPCI_ 162, 166, 170, 181
CSREG_ 107, 162, 166, 170, 181
Customer Support Information 28
Cycle Termination
PCI Target Channel 78
QBus Slave Channel 51, 54

D

D_PE bit
PCI_CS Register 201
D[31:0] 162, 166, 170, 181
D1_SP bit
PCI_PMC Register 217
D2_SP bit
PCI_PMC Register 217
DACK_/SDACK_ 162, 166, 181
DATA field
EEPROM_CS Register 277
Data Packing/Unpacking 68
IDMA Channel 86, 87, 91
PCI Target Channel 68, 72
QBus Slave Channel 47
Data packing/unpacking
IDMA Channel 92
Data Parity Error (see Parity)
Data Phase
PCI Configuration Cycle 110
PCI Interface
and PAR 50
PCI Target Channel
burst 72
DC Characteristics 177
Decoupling Capacitors 158
Delayed Transfer
Configuration Cycles 32
PCI Target Channel 82
PCI Transaction Ordering 75
PWEN bit 72
single write 72, 73
write 81
QBus Slave Channel 30, 52
burst read 48
delayed write 51
PCI Transaction Ordering 49
single write 51
DEV_NUM field
CON_ADD Register 256, 385
DEV66 bit
PCI_CS Register 202
DEVSEL field
PCI_CS Register 201
DEVSEL# 44, 62, 81, 172, 181
DID field
PCI_ID Register 200
DIR bit
DMA_CS Register 252
IDMA/DMA_CS Register 247
Direct Mode
DMA Channel 94
discard timer 48
DMA Channel 31
Burst Cycles 96
description 93
Direct Mode 94, 97
DMA Cycles on QBus 97
Linked-List Mode 94, 98
Registers 95
DMA Registers 95
DMA_CPP Register 255
DMA_CS Register 252
DMA_QADD Register 251
Document Conventions
Bit Ordering 27
Document Status 28
Numeric Conventions 27
Signals 27
Symbols 28
Typograhic Conventions 27
DONE bit
IDMA/DMA_CS Register 246
DONE_ 163, 166, 182
DONE_DIR bit
INT_DIR Register 266
DONE_EN bit
INT_CTL Register 263
DONE_IS bit
INT_STAT Register 260
DP_D bit
PCI_CS Register 116
DPNE_DIR bit
INT_DIR Register 267
DREQ_ 86, 163, 166, 182

© 2019 Renesas Electronics Corporation

DS_ 163, 182
DSACK0_ 163, 182
DSACK1_/TA_ 163, 167, 170, 182
DSI bit
    PCI_PMC Register 217
DSIZE bit
    PBTI0_CTL Register 222
DSIZE field
    DMA_CS Register 252
    PBROM_CTL Register 230, 387
    PBTI0_CTL Register 382
    PBTI1_CTL Register 226, 382
Dual Address Cycle 85, 87, 322, 341
    termination mode 248
    timing 247, 326, 328

E

EEPROM
    channel description 121–128
    Control and Status Register 198
    PCI_BST0 register enabled 208
    PCI_BST1 register enabled 210
    programming 127
    SCL signal 175
    SDA signal 175
EEPROM_CS Register 277
    ADDR field 128
EIM bit
    CPCI_HS Register 219
EN bit
    PB_ERRCS Register 232, 383
    PBTI0_CTL Register 222, 382
    PBTI1_CTL Register 226, 382
    PCI_BSROM Register 213, 387
    QB_ERRCS Register 291, 383
    QBSI0_AT Register 285, 380
    QBSI1_AT Register 289, 380
Endian Issues
    PCI Target Channel 66–71, 226, 252
    QBus Slave Channel 44–45
    Register Channel 108
Endian Mapping 389
ENID 175, 176, 182
ENUM# 174, 182
ES bit
    PB_ERRCS Register 232, 383
    QB_ERRCS Register 291, 383
Expansion ROM 213, 214, 230
EXT bit
    CPCI_HS Register 219
EXT_GNT# 182
EXT_GNT#[6:1] 172
EXT_REQ# 182
EXT_REQ#[6:1] 173

F

FIFO_SIZE field
    I2O_CS Register 237
FRAME# 62, 173, 182, 187
Frequency
    PCLK 173
    QCLK
        M68040 171, 310
        PowerQUICC 167, 306
        QUICC 164, 301
            IDMA fast termination 306, 325, 328
        QUICC IDMA fast termination 164
FUNC_NUM field
    CON_ADD Register 256, 385
Functional Diagram
    QSpan II 30

G

GNT# 173, 182
GO bit
    IDMA/DMA_CS Register 246

H

HALT_/TRETRY_ 163, 167, 182
Hot Swap Friendly 143
HS_HEALTHY_ 174, 182
HS_LED 174, 182
HS_SWITCH 174, 182

I

I/O Read 43, 44, 62
I/O Space
    IDMA Channel 84
    PCI Target Channel
        burst 80
        image programming 60, 62
    QBus Slave Channel 30, 38
        burst 47, 48, 51
        image programming 38
I/O Write 43, 44, 62

© 2019 Renesas Electronics Corporation

I_2O
- Inbound Messaging 132
- Interrupts 137
- Operation 134
- Outbound Messaging 133

I_2O Messaging Unit 131
I2O_BAR Register 207
I2O_CS Register 236
I2O_INQ Register 296
I2O_OPIM Register 295
I2O_OPIS Register 294
I2O_OUTQ Register 297
IACK_GEN Register 259
- IACK_VEC field 119

IACK_VEC bit
- IACK_GEN Register 385

IACK_VEC field
- IACK_GEN Register 259

IDMA Channel
- Endian issues 91–92
- error (see Bus Error/IDMA)
- interrupt (see Interrupt/IDMA)
- port size 85, 86, 87, 247
- reset 89, 246, 248
- status 89

IDMA signals (direction) 322, 341
IDMA_ADD Register
- ADDR field 85, 87

IDMA_CNT Register
- IDMA_CNT field 86, 87, 88

IDMA_CS Register
- ACT bit 89
- DIR bit 85, 87
- DONE bit 86, 87, 88, 89, 90, 116
- GO bit 86, 87
- IMODE bit 85
- IPE bit 86, 87, 89, 90, 91, 116
- IQE bit 89, 90, 91, 116
- IRST bit 86, 87, 89, 90, 91, 115, 116
- IRST_REQ bit 86, 88, 91
- PORT16 bit 85, 87
- QTERM bit 85, 87
- STERM bit 85, 87

IDMA/DMA_CNT Register 250
IDMA/DMA_CS Register 246
IDMA/DMA_PADD Register 249
IDSEL 105, 173, 182
IF_BP field
- IIF_BP Register 239

IF_E bit
- I2O_CS Register 236

IF_F bit
- I2O_CS Register 236

IF_TP field
- IIF_TP Register 238

IFE_DIR bit
- INT_DIR Register 267

IFE_EN bit
- INT_CTL Register 265

IFE_S bit
- INT_STAT Register 261

I-FIFO Watermark 87
IIF_BP Register 239
IIF_TP Register 238
IIP_BP Register 241
IIP_TP Register 240
IMODE bit
- IDMA/DMA_CS Register 247

IMSEL 163, 167, 170, 182, 374
IN_Q field
- I2O_INQ Register 296

INS bit
- CPCI_HS Register 219

INT_CTL Register 263
- DONE_EN bit 89, 90, 116
- DPD_EN bit 50, 116
- IPE_EN bit 90, 116
- IQE_EN bit 89, 90, 116
- IRST_EN bit 89, 90, 116
- PEL_EN bit 54
- QEL_EN bit 82, 116
- SI0 bit 118
- SI1 bit 118

INT_CTL2 Register 269
INT_DIR bit
- INT_DIR Register 266

INT_DIR Register 266
- DPD_DIR bit 116
- IPE_DIR bit 90, 116
- IQE_DIR bit 90, 116
- IRST_DIR bit 90, 116
- PEL_DIR bit 54
- QEL_DIR bit 82, 116
- SI0_DIR bit 118
- SI1_DIR bit 118

INT_EN bit

© 2019 Renesas Electronics Corporation

INT_CTL Register 264
INT_IS bit
INT_STAT Register 260
INT_LINE field
PCI_MISC1 Register 216
INT_PIN field
PCI_MISC1 Register 216
INT_STAT Register 260
DONE_IS bit 90, 116
DPD_IS bit 116
IPE_IS bit 90, 116
IQE_IS bit 90, 116
IRST_IS bit 90, 116
QEL_IS bit 116
SI0_IS bit 118
SI1_IS bit 118
INT# 115, 173, 182
Interrupt Acknowledge Cycle 43, 119
Interrupt Channel 32
address parity 75
description 113
IDMA Channel 89
interrupt enabling 116
interrupt mapping 116
interrupt sources 116
PCI Target Module posted writes 82
QBus slave module posted writes 54
INVEND bit
DMA_CS Register 252
PBTI0_CTL Register 222, 382
PBTI1_CTL Register 226, 382
IOF_BP Register 243
IOF_TP Register 242
IOP_BP Register 245
IOP_TP Register 244
IOS bit
PCI_CS Register 203, 381
IP_BP field
IIP_BP Register 241
IP_E bit
I2O_CS Register 236
IP_F bit
I2O_CS Register 236
IP_TP field
IIF_TP Register 240
IPE bit
IDMA/DMA_CS Register 246
IPE_DIR bit
INT_DIR Register 266
IPE_EN bit
INT_CTL Register 263
IPE_IS bit
INT_STAT Register 260
IPF_DIR bit
INT_DIR Register 267
IPF_EN bit
INT_CTL Register 265
IPF_S bit
INT_STAT Register 261
IPL[2:0] 374
IPN_DIR bit
INT_DIR Register 267
IPN_EN bit
INT_CTL Register 265
IPN_IS bit
INT_STAT Register 261
IQE bit
IDMA/DMA_CS Register 246
IQE_DIR bit
INT_DIR Register 266
IQE_EN bit
INT_CTL Register 263
IQE_IS bit
INT_STAT Register 260
IRDY# 173, 182
IRQ[7:1] 362, 369
IRST bit
IDMA/DMA_CS Register 246
IRST_DIR bit
INT_DIR Register 266
IRST_EN bit
INT_CTL Register 263
IRST_IS bit
INT_STAT Register 260
IRST_REQ bit
IDMA/DMA_CS Register 246
IWM field
DMA_CS Register 252
IDMA/DMA_CS Register 247

J

JTAG 25

K

KEEP_BB bit 73
MISC_CTL2 Register 278, 379

© 2019 Renesas Electronics Corporation

L

LAYOUT field
    PCI_MISC0 Register 205
Linear address incrementing 72
Linked-List Mode
    DMA Channel 94
LOCK 56
LOO bit
    CPCI_HS Register 219
LTIMER field
    PCI_MISC0 Register 205

M

M68040 29, 156
    bus arbitration 78
    Compatibility of QSpan with variants of 373, 405
    cycle termination 79
    Interface 372
    master and slave modes 156
    signals 169
MA_BE_D bit
    MISC_CTL Register 274, 378, 385
Mailbox Registers 112
Master-Abort 44, 51, 53, 54, 75
Master-Completion 51, 82
MAX_LAT field
    PCI_MISC1 Register 216
MAX_RTRY field
    MISC_CTL2 Register 278, 379
MB_DATA field
    MBOX0 Register 270
    MBOX1 Register 271
    MBOX2 Register 272
    MBOX3 Register 273
MB0_DIR bit
    INT_DIR Register 267
MB0_EN bit
    INT_CTL Register 264
MB0_IS bit
    INT_STAT Register 261
MB1_DIR bit
    INT_DIR Register 267
MB1_EN bit
    INT_CTL Register 264
MB1_IS bit
    INT_STAT Register 261
MB2_DIR bit
    INT_DIR Register 267
MB2_EN bit
    INT_CTL Register 264
MB2_IS bit
    INT_STAT Register 261
MB3_DIR bit
    INT_DIR Register 267
MB3_EN bit
    INT_CTL Register 264
MB3_IS bit
    INT_STAT Register 261
MBOX0 Register 270
MBOX1 Register 271
MBOX2 Register 272
MBOX3 Register 273
MC68302 24
MD_PED bit
    PCI_CS Register 202
MDBS bit
    DMA_CS Register 253
MDPED_DIR bit
    INT_DIR Register 266
MDPED_EN
    INT_CTL 263
MDPED_IS bit
    INT_STAT Register 260
Mechanical Information 399
Memory Controller
    M68040 374
    PowerQUICC 368
    QUICC 361
Memory Read 62
Memory Read Line 43, 62
Memory Read Multiple 43, 62
Memory Space
    IDMA Channel 84
    PCI Target Channel
        image programming 60
    QBus Slave Channel
        burst 47, 48
        image programming 38
Memory Write 43, 44, 62
Memory Write and Invalidate 43, 62
MFBBC bit
    PCI_CS Register 202
MFUNCT bit
    PCI_MISC0 Register 205
MIN_GNT field

© 2019 Renesas Electronics Corporation

PCI_MISC1 Register 216
MISC_CTL Register 35, 274
MSTSLV field 35, 57, 156
QB_BOC bit 44, 66, 91
S_BB bit 77, 78
S_BG bit 77, 78
SW_RST bit 154
MISC_CTL register
QB_BOC bit 61
MISC_CTL2 Register 278
MS bit
PCI_CS Register 203, 381, 387
MSTSLV field
MISC_CTL Register 275, 378
MWI_EN bit
PCI_CS Register 203
Mx_PRI bit
PARB_CTL Register 281, 380

N

NOTO bit
MISC_CTL2 Register 379
NXT_IP field
CPCI_HS Register 219
PCI_PMC Register 217
PCI_VPD Register 220

O

OF_BP field
IOF_BP Register 243
OF_E bit
I2O_CS Register 236
OF_F bit
I2O_CS Register 236
OF_TP field
IOF_TP Register 242
OFE_DIR bit
INT_DIR Register 267
OFE_EN bit
INT_CTL Register 265
OFE_S bit
INT_STAT Register 261
OFF_DIR bit
INT_DIR Register 268
OFF_EN bit
INT_CTL Register 265
OFF_S bit
INT_STAT Register 262
OP_BP field
IOP_BP Register 245
OP_E bit
I2O_CS Register 236
OP_F bit
I2O_CS Register 237
OP_IM bit
I2O_OPIM Register 295
OP_ISR bit
I2O_OPIS Register 294
OP_TP field
IOP_TP Register 244
Open Drain Output 182, 183
OPNE bit
INT_STAT Register 261
OPNE_EN bit
INT_CTL Register 264
Ordering Information 405
OUT_Q field
I2O_OUTQ Register 297

P

P2P_BSE field
PCI_PMCS Register 218
PAERR field
PB_AERR Register 234, 383
PAR 50, 75, 173, 182
PARB_CTL Register 281
Parity
PCI Master Module
address parity 50
data parity 50
PCI Target Module
address parity 62, 75
data parity 75
register bits 50, 75, 201, 202, 266
summary 116
PARK bit
PARB_CTL Register 281, 380
PAS bit
PBTI0_CTL Register 222, 382
PBTI1_CTL Register 226, 382
PCI_BSIO Register 208
PCI_BST1 Register 210
QBSI0_CTL Register 283, 380
QBSI1_CTL Register 287, 380
PB_AERR Register 234
PAERR field 54

© 2019 Renesas Electronics Corporation

PB_DERR 54
PB_DERR Register 235
PB_ERRCS 54
PB_ERRCS Register 232
    BE_ERR field 54
    CMDERR field 54
    EN bit 53, 54
    ES bit 54
PBROM_CTL Register 230
PBTI0_ADD Register 224
PBTI0_CTL Register 222
PBTI1_ADD Register 228
PBTI1_CTL Register 226
PBTIx_ADD
    BA field 59
    TA field 60
PBTIx_CTL Register
    BS field 59
    DSIZE field 57, 60, 66
    EN bit 60
    PAS bit 60
    PWEN bit 60
    TC field 60, 64
PCI Bus Arbiter 139
    Arbitration Scheme 140
    Bus Parking 142
PCI Interface 29
    cycle types 43
PCI Master Module
    defined 36
PCI Power Management Support 151
    PME# 151
PCI Target Image
    base address 59
    block size 59
    enabling 60
    PCI address space 60
    port size 60
    posted write enabling 60
    registers 224–229
    transaction code 60
    translation address 60
PCI Target Image 62
PCI Target Module 56
PCI Target Prefetch Disconnect 80
PCI_ARB_EN 175, 183
    Reset Options 156
PCI_ARB_EN bit
    PARB_CTL Register 281, 380
PCI_BSM Register 206
    BA field 106
PCI_BSROM Register 213
PCI_BST0 Register 208
PCI_BST1 Register 210
PCI_BSTx Register
    BA field 65, 66
    PAS bit 65–66
PCI_CLASS Register 204
PCI_CP Register 215
PCI_CS Register 201
    BM bit 108, 155, 162, 166, 170, 380
    D_PE bit 50
    DEVSEL field 62
    DP_D bit 50, 116
    MS bit 106
    PERESP bit 50, 75
    S_SERR bit 75
    SERR_EN bit 75
PCI_DIS 175, 183
    Reset Options 156
PCI_DIS bit
    MISC_CTL2 Register 278, 379
PCI_ID Register 200
PCI_MISC0 Register 205
    CLINE field 81, 85, 87, 90
PCI_MISC1 Register 216
PCI_PMC Register 217
PCI_PMCS Register 218
PCI_SID Register 212
    SID field 125
    SVID field 125
PCI_VPD Register 220, 221
PCLK 173, 183
PCSR_DIR bit
    INT_DIR Register 266
PCSR_EN bit
    INT_CTL Register 263
PCSR_IS bit
    INT_STAT Register 260
PDERR field
    PB_DERR Register 235, 383
PEL_DIR bit
    INT_DIR Register 266
PEL_EN bit
    INT_CTL Register 263
PEL_IS Register

© 2019 Renesas Electronics Corporation

INT_STAT Register 260
PERESP bit
PCI_CS Register 202
PERR_DIR bit
INT_DIR Register 267
PERR_EN bit
INT_CTL Register 264
PERR_IS bit
INT_STAT Register 261
PERR# 50, 173, 183
P-FIFO 57
Pin-Out
17x17 mm Package 190, 191
Plug and Play 25
PM_VER field
PCI_PMC Register 217
PME_CLK bit
PCI_PMC Register 217
PME_EN bit
PCI_PMCS Register 218
PME_SP field
PCI_PMC Register 217
PME_ST bit
PCI_PMCS Register 218
PME# 151, 175, 183
Port Size
IDMA Channel 85, 86, 87
IDMA_CS register 85, 247
PBROM_CTL register 230
PBTI0_CTL register 222
PBTI1_CTL register 226, 252
PCI Target Image 60
PORT16 bit
IDMA/DMA_CS Register 247
Posted Write
error 54, 82
PCI Target Channel 72
enabling 60, 72
error logging 82
PCI transaction ordering 49–50
QBus Slave Channel 46–47
enabling 38
PCI transaction ordering 49
transaction ordering 50
Posted Write Termination
QBus Slave Channel
error logging 53
Power Dissipation 395
PowerQUICC 24, 29
Bus Arbitration 77
Connection Caution 41
cycle termination 52, 79
DONE signal 86
master and slave modes 156
signals 165
PowerQUICC Interface 365
Power-Up Options 153, 157
PR_CNT2 bit
MISC_CTL2 Register 379
PR_CNT2 field
MISC_CTL2 Register 279
PR_SING bit
MISC_CTL2 Register 61, 279, 379
PRCNT bit
MISC_CTL Register 378
PRCNT field
MISC_CTL Register 275
PREF bit
PCI_BSIO Register 208
PCI_BST1 Register 210
PREN bit
PBTI0_CTL Register 222, 382
PBTI1_CTL Register 226, 382
QBSI0_CTL Register 283, 380
QBSI1_CTL Register 287, 380
PROG field
PCI_CLASS Register 204
PSC_DIR bit
INT_DIR Register 267
PSC_EN bit
INT_CTL Register 264
PSC_IS bit
INT_STAT Register 261
PSC_QRST bit
MISC_CTL2 Register 280
PTC_PD bit
MISC_CTL2 Register 278, 379
PTP_IB bit
MISC_CTL2 Register 278, 379
Pull-Downs 157
Pull-Up
M68040 signals 374, 376
PowerQUICC signals 368
QUICC signals 52, 362, 363, 370
Pull-Ups 160
PWEN bit

© 2019 Renesas Electronics Corporation

PBTI0_CTL Register 222, 382
PBTI1_CTL Register 226, 382
QBSI0_CTL Register 283, 380
QBSI1_CTL Register 287, 380
PWR_ST field
PCI_PMCS Register 218

Q

Q_ADDR field
DMA_CS Register 384
DMA_QADD Register 251
Q_OFF bit
DMA_CS Register 253
QAERR field
QB_AERR Register 292, 383
QB_AERR Register 292
QAERR field 82
QB_BOC bit
MISC_CTL Register 258, 259, 274, 378
QB_DERR Register 293
QDERR field 82
QB_ERRCS Register 291
EN bit 82
ES bit 82
SIZ_ERR field 82
TC_ERR field 82
QBSI0_AT Register 285
QBSI0_CTL Register 283
QBSI1_AT Register 289
QBSI1_CTL Register 287
QBSIx_AT Register
BS field 38, 40, 42, 59, 126
EN bit 38, 40
TA field 38, 40, 125
QBSIx_CTL Register
PAS bit 38, 43, 44, 47, 125
PWEN bit 38, 46, 47, 125
QBus
Bursting on the QBus 73
QBus (defined) 29
QBus Data Parity 35, 58
QBus Master Mode 57
QBus Master Module 57
QBus Slave Image 37–38
enable address translation 38
PCI address space 38
posted write enabling 38
registers 289
QBus Slave Mode 35, 57
QBus Slave Module 35
QCLK 164, 167, 171, 183
QDERR field
QB_DERR Register 293, 383
QDPE_DIR bit
INT_DIR Register 267
QDPE_EN bit
INT_CTL Register 264
QDPE_S bit
INT_STAT Register 261
QEL_DIR bit
INT_DIR Register 266
QEL_EN bit
INT_CTL Register 263
QEL_IS bit
INT_STAT Register 260
QIBA field
I2O_CS Register 236
IIF_BP Register 239
IIF_TP Register 238
IIP_BP Register 241
IIP_TP Register 240
IOF_BP Register 243
IOF_TP Register 242
IOP_BP Register 245
IOP_TP Register 244
QINT_ 115, 164, 167, 171, 183, 362, 374
QINT_DIR bit
INT_DIR Register 267
QINT_EN bit
INT_CTL Register 264
QINT_IS bit
INT_STAT Register 261
QINT_PME bit
MISC_CTL2 Register 280
QS_PRI bit
PARB_CTL Register 281, 380
QSC_PW bit
MISC_CTL2 Register 379
QSpan II Device Specific Registers 193
QTERM bit
IDMA/DMA_CS Register 247
QUICC
bus arbitration 76
cycle termination 78
master and slave modes 156
signals 161

© 2019 Renesas Electronics Corporation

QUICC Interface 359

R

R_MA bit
    PCI_CS Register 201
R_TA bit
    PCI_CS Register 201
R/W_ 164, 167, 171, 183
READ bit
    EEPROM_CS Register 277
Read Transactions 74
REG_AC bit
    MISC_CTL2 Register 279, 379
REG_NUM field
    CON_ADD Register 256, 385
Register Channel 31, 103–110
    from PCI bus 105
    from QBus 107–110
Register Map 195, 199
Related Documentation 28
REQ# 40, 174, 183
Reset
    EEPROM 121
    from PCI bus 174
    options 153
    QBus 164, 167
    QSpan from QBus 167, 171
    QSpan II from PCI bus 153
    QSpan II from QBus 164
    QSpan II through sofware 154
    timing parameters 313
RESETH_ 373
RESETI_ 153, 164, 167, 171, 183
RESETO_ 153, 164, 167, 171, 183
Resets 153
    IDMA Channel 89
RESETS_ 367
RID field
    PCI_CLASS Register 204
RR_BP bit
    I2O_CS Register 237
RST# 153, 174, 183
RSTI_ 373

S

S_BB bit
    MISC_CTL Register 274, 378
S_BG bit
    MISC_CTL Register 274, 378
S_SERR bit
    PCI_CS Register 201
S_TA bit
    PCI_CS Register 201
SBIST bit
    PCI_MISC0 Register 205
SBO# 56
SC bit
    PCI_CS Register 203
SCL 123, 157, 175, 183
SDA 123, 175, 183
SDACK_ 183
SDONE 56
SERR_DIR bit
    INT_DIR Register 267
SERR_EN bit
    INT_CTL Register 264
    PCI_CS Register 202
SERR_IS bit
    INT_STAT Register 261
SERR# 75, 174, 183
SI0 bit
    INT_CTL Register 265
SI0_DIR bit
    INT_DIR Register 268
SI0_IS bit
    INT_STAT Register 262
SI1 bit
    INT_CTL Register 265
SI1_DIR bit
    INT_DIR Register 268
SI1_IS bit
    INT_STAT Register 262
SI2 bit
    INT_CTL2 Register 269
SI2_DIR bit
    INT_DIR Register 268
SI2_IS bit
    INT_STAT Register 262
SI3 bit
    INT_CTL2 Register 269
SI3_DIR bit
    INT_DIR Register 268
SI3_IS bit
    INT_STAT Register 262
SID field
    PCI_SID Register 212

© 2019 Renesas Electronics Corporation

SIZ_ERR field
QB_ERRCS Register 291, 383
SIZ[1:0] 92, 119, 164, 168, 171, 183
size encoding (M68040) 172
size encoding (QUICC and PowerQUICC) 169
SIZ[1] 183
SIZ[3:0] 362
Software Initialization 377
EEPROM and VPD 386
Error Logging of Posted Transactions 383
Generation of PCI Configuration and IACK Cycles 385
I2O Messaging Unit 386
IDMA/DMA Channel 384
Interrupt Initialization 384
Miscellaneous Control Register Configuration 378
PCI Expansion ROM Implementation 387
PCI Target Channel 381
QBus Slave Channel 380
Register Access from the PCI Bus 381
SPACE bit
I2O_BAR Register 207
PCI_BSM Register 206
Special Cycle 43
STERM bit
IDMA/DMA_CS Register 247
STOP bit
DMA_CS Register 253
STOP_STAT bit
DMA_CS Register 253
STOP# 80, 81, 174, 183
SUB field
PCI_CLASS Register 204
SVID field
PCI_SID Register 212
SW_RST bit
MISC_CTL Register 274, 378

T

TA bit
PBTI1_ADD Register 382
TA field
PBROM_CTL Register 230, 387
PBTI0_ADD Register 224, 382
PBTI1_ADD Register 228
QBSI0_AT Register 285, 380
QBSI1_AT Register 289, 380
TA_ 168, 171, 183, 341
TA_BE_EN bit
MISC_CTL2 Register 279, 379
Target-Abort 51, 53, 80, 81, 82
defined 81
Target-Disconnect 51, 72, 80
defined 80
Target-Retry 51, 80
defined 81
TC field
DMA_CS Register 252
IDMA/DMA_CS Register 247
PBROM_CTL Register 230, 387
PBTI0_CTL Register 222, 382
PBTI1_CTL Register 226, 382
TC_EN bit
IDMA/DMA_CS Register 247
TC_ERR field
QB_ERRCS Register 291, 383
TC[1] 183
TC[2] 183
TC[3:0] 164, 168, 171, 183
TC[3] 183
TCK 176, 184
TDI 176, 184
TDO 176, 184
TEA_ 168, 172
Termination Mode (IDMA) 85, 87, 247
TEST1 175, 184
TEST2 175, 184
TEST3 175, 184
Test-Mode Operation 157
TFBBC bit
PCI_CS Register 202
TIP_ 172, 184
TM[2:0] 374
TMODE[0] 184
TMODE[1:0] 157, 175
TMODE[1] 184
TMS 184
Transaction Decoding
PCI Target Module 59, 66
QBus Slave Module 37
Transaction Ordering 49–50, 75–76
TRDY# 80, 81, 174, 184
TRETRY_ 168
TRST_ 176, 184

© 2019 Renesas Electronics Corporation

TS_ 37, 39, 168, 184
TT[1:0] 374
TYPE bit
    CON_ADD Register 256, 385
Typical Applications 359

U

UNL_QSC bit
    PB_ERRCS Register 232

V

VGAPS bit
    PCI_CS Register 203
VH 175
VID field
    PCI_ID Register 200
Vital Product Data 128
VPD
    Reading VPD Data 129
    Writing VPD Data 129
VPD_ADDR field
    PCI_VPD Register 220
VPD_DATA field
    PCI_VPD Register 221
VPD_F bit
    PCI_VPD Register 220

W

WAIT bit
    PCI_CS Register 202

© 2019 Renesas Electronics Corporation

IMPORTANT NOTICE AND DISCLAIMER

RENESAS ELECTRONICS CORPORATION AND ITS SUBSIDIARIES (“RENESAS”) PROVIDES TECHNICAL SPECIFICATIONS AND RELIABILITY DATA (INCLUDING DATASHEETS), DESIGN RESOURCES (INCLUDING REFERENCE DESIGNS), APPLICATION OR OTHER DESIGN ADVICE, WEB TOOLS, SAFETY INFORMATION, AND OTHER RESOURCES “AS IS” AND WITH ALL FAULTS, AND DISCLAIMS ALL WARRANTIES, EXPRESS OR IMPLIED, INCLUDING, WITHOUT LIMITATION, ANY IMPLIED WARRANTIES OF MERCHANTABILITY, FITNESS FOR A PARTICULAR PURPOSE, OR NON-INFRINGEMENT OF THIRD PARTY INTELLECTUAL PROPERTY RIGHTS.

These resources are intended for developers skilled in the art designing with Renesas products. You are solely responsible for (1) selecting the appropriate products for your application, (2) designing, validating, and testing your application, and (3) ensuring your application meets applicable standards, and any other safety, security, or other requirements. These resources are subject to change without notice. Renesas grants you permission to use these resources only for development of an application that uses Renesas products. Other reproduction or use of these resources is strictly prohibited. No license is granted to any other Renesas intellectual property or to any third party intellectual property. Renesas disclaims responsibility for, and you will fully indemnify Renesas and its representatives against, any claims, damages, costs, losses, or liabilities arising out of your use of these resources. Renesas' products are provided only subject to Renesas' Terms and Conditions of Sale or other applicable terms agreed to in writing. No use of any Renesas resources expands or otherwise alters any applicable warranties or warranty disclaimers for these products.

(Rev.1.0 Mar 2020)

Corporate Headquarters

TOYOSU FORESIA, 3-2-24 Toyosu,
Koto-ku, Tokyo 135-0061, Japan
www.renesas.com

Contact Information

For further information on a product, technology, the most up-to-date version of a document, or your nearest sales office, please visit:
www.renesas.com/contact/

Trademarks

Renesas and the Renesas logo are trademarks of Renesas Electronics Corporation. All trademarks and registered trademarks are the property of their respective owners.

© 2020 Renesas Electronics Corporation. All rights reserved.