DESCRIPTION: M12 4 POSITION STAINLESS STEEL MALE PIGTAIL

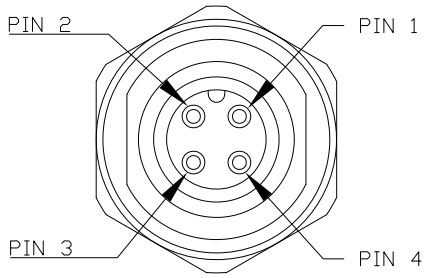

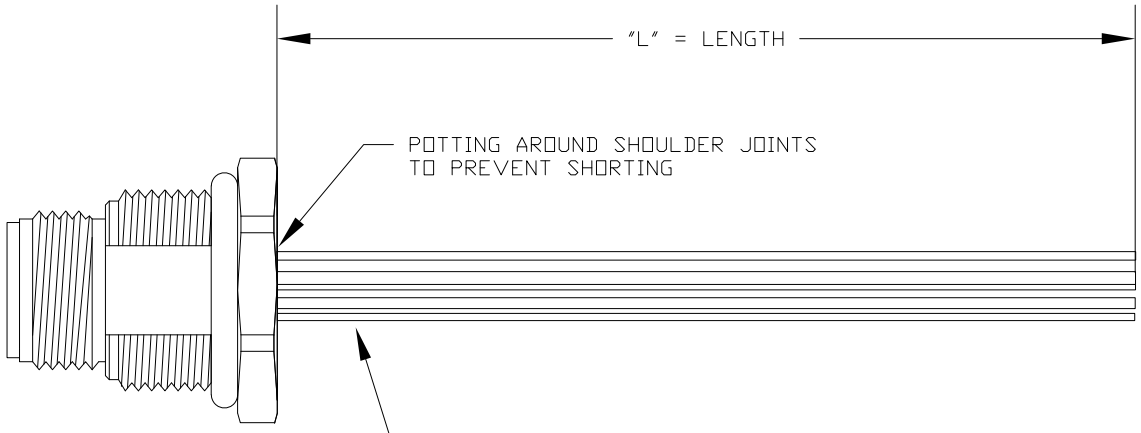

**SEE PAGE 2 FOR DETAILS

WIRING SCHEMATIC

1	2
PIN	PIN
1 = BROWN	1 = RED
2 = WHITE	2 = GREEN
3 = BLUE	3 = BLACK
4 = BLACK	4 = WHITE

MPM12A04IYYBR0Y

- INCHES
- LENGTH
  EX: 06 = 6 INCHES
  12 = 12 INCHES
- 01 = WIRING SCHEMATIC 1
  02 = WIRING SCHEMATIC 2

NOTE: PACKAGED 10 PER BAG

RoHS COMPLIANT

UNITS IN INCHES [MM] DO NOT SCALE FROM DRAWING

THESE DRAWINGS AND SPECIFICATIONS ARE THE PROPERTY OF NorComp AND SHALL NOT BE REPRODUCED, COPIED OR USED AS THE BASIS FOR THE MANUFACTURE OR SALE OF APPARATUS WITHOUT WRITTEN PERMISSION.

DRAWN:	DATE:
G. BROWN	01/23/2019

NorComp

SCALE:	SHEET	OF	REV
NTS	1	2	2

DWG NO. MPM12A04IYYBR0Y

DESCRIPTION: M12 4 POSITION STAINLESS STEEL MALE PIGTAIL

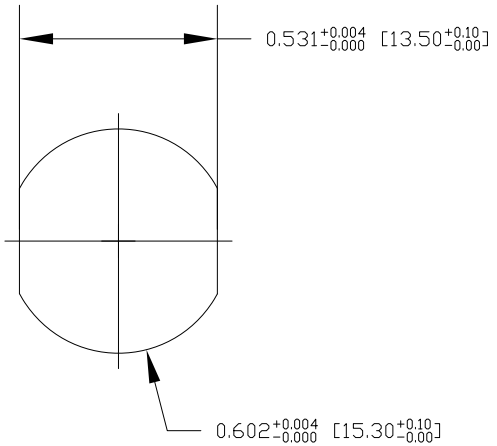

RECOMMENDED PANEL CUT-OUT

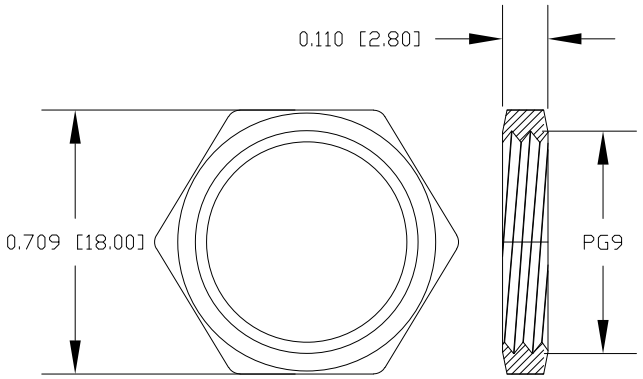

NUT

NOTE:

MATERIAL	
HOUSING:	PBT UL94V-0, BLACK
CONTACT:	BRASS
NUT:	STAINLESS STEEL 316
SHELL:	STAINLESS STEEL 316
O-RING:	EPDM, BLACK
FINISH	
CONTACT:	GOLD PLATED 10μ" Min.
UNDER PLATE:	NICKEL
ELECTRICAL	
RATED CURRENT:	4A
RATED VOLTAGE:	250V
INSULATION RESISTANCE:	100MΩ MIN
CONTACT RESISTANCE:	10mΩ MAX
WATER PROOF:	IP67/68
ENVIRONMENT	
OPERATION TEMPERATURE:	-40°C ~ +85°C

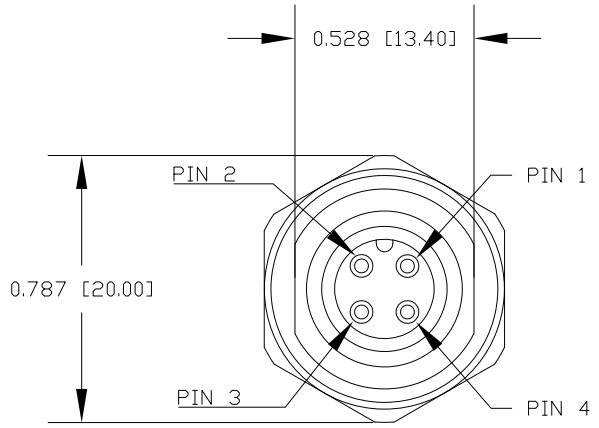

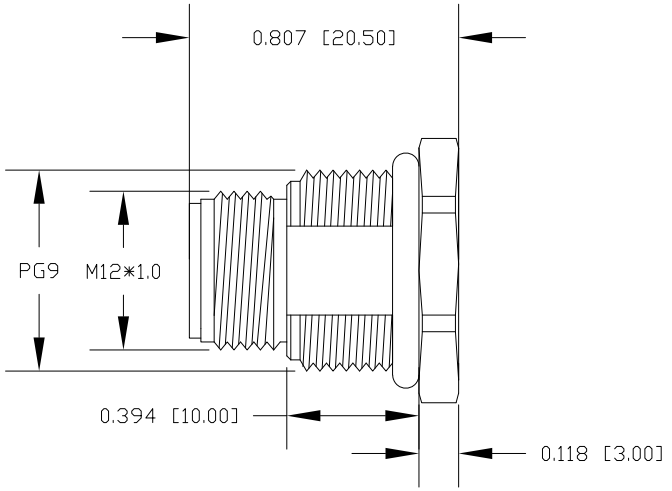

RoHS COMPLIANT

UNITS IN INCHES [MM] DO NOT SCALE FROM DRAWING

THESE DRAWINGS AND SPECIFICATIONS ARE THE PROPERTY OF NorComp AND SHALL NOT BE REPRODUCED, COPIED OR USED AS THE BASIS FOR THE MANUFACTURE OR SALE OF APPARATUS WITHOUT WRITTEN PERMISSION.

DRAWN: G. BROWN	NorComp	SCALE: NTS	SHEET 2 OF 2	REV 2
DATE: 01/23/2019		DWG NO. MPM12A04IYYBR0Y	