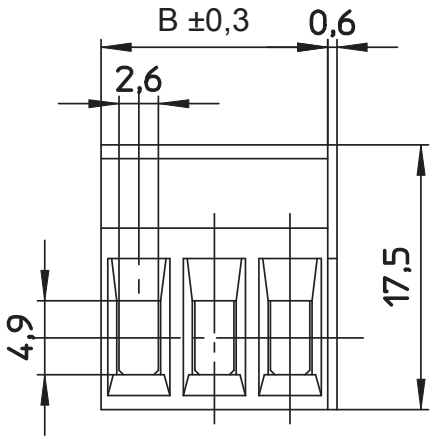

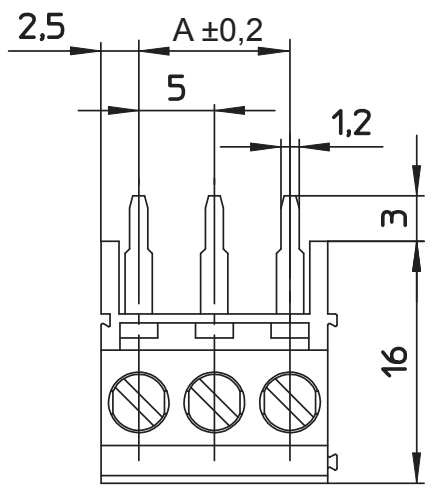

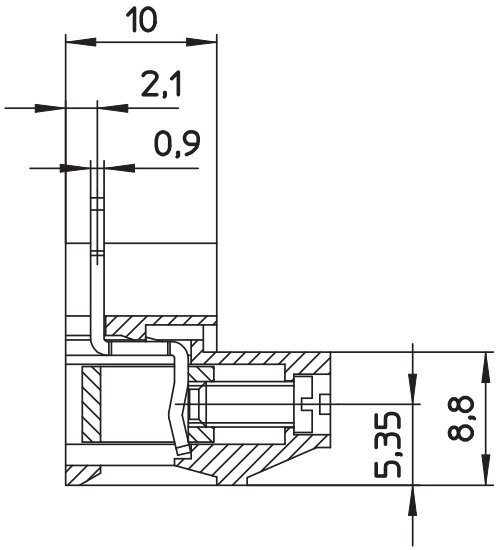

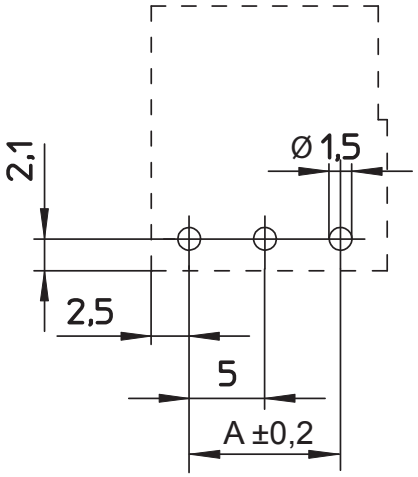

PCB LAYOUT - COMPONENT VIEW

A = (nb. pin-1) x pitch

B = (nb. pin x pitch)

TECHNICAL CHARACTERISTICS

MATERIAL
INSULATOR: PA6/66
FLAMMABILITY RATING: UL94V0
COLOR: GREEN
METAL HOUSING: COPPER ALLOY / Ni
TERMINAL SCREW: STEEL / Zn
WIRE GUARD: COPPER ALLOY / Ni+Sn

ENVIRONMENTAL
OPERATING TEMPERATURE: -30°C UP TO +120°C
COMPLIANCE: LEAD FREE AND ROHS

ELECTRICAL	UL	VDE
CURRENT RATING:	16A	24A
WORKING VOLTAGE:	300VAC	250VAC
WITHSTANDING VOLTAGE:	1,6KV	2KV

CONTACT RESISTANCE: 20 mΩ MAX

STANDARD
CERTIFIED: E150931 CAT. N°: MRT4 (1)
CERTIFIED: 40021393 TYPE: MRT4

MECHANICAL
SOLID WIRE: 30-12 AWG / 0,05-3,31 (x2) mm²
STRANDED WIRE: 30-12 AWG / 0,05-3,31 (x2) mm²
TORQUE: 5Lb.In / 0,5 Nm

WIRE STRIPE LENGTH: 6 mm
SCREW: M3
PITCH: 5 mm

SOLDERING
JEDEC LEAD FREE WAVE SOLDERING

PACKAGING
BOX

RoHS Compliant

REV	DATE	FILE	BY
G			
F			
E			
D			
C			
B			
A	26-AUG-14	PDF	AK

PROJECTION:

GENERAL TOLERANCE
±0,1

APPROVAL: QL

UNIT: MM
SCALE:
SHEET: 1/2
DRAW: AK

WÜRTH ELEKTRONIK

DESCRIPTION: SERIE 2527 - 5.00 MM - VERTICAL CABLE ENTRY WITH RISING CAGE CLAMP - WR-TBL

WERI PART NO: 691 252 700 0xx

SIZE
A4

Cautions and Warnings:

This electronic component is designed and developed with the intention for use
in general electronics equipments.
Before incorporating the components into any equipments in the field such as aerospace, aviation,
nuclear control, submarine, transportation, (automotive control, train control, ship control),
transportation signal, disaster prevention, medical, public information network etc. where higher safety
and reliability are especially required or if there is possibility of direct damage or injury to human body,
Wurth Elektronik must be asked for a written approval.
In addition, even electronic component in general electronic equipments, when used in electrical circuits
that require high safety, reliability functions or performance, the sufficient reliability evaluation-check
for the safety must be performed before by the user before usage.

RoHS Compliant							
G				PROJECTION:	GENERAL TOLERANCE	WÜRTH ELEKTRONIK	
F					.X = +/- 0.2		
E					.XX = +/- 0.15		
D							
C				APPROVAL: JC	UNIT: MM	DESCRIPTION: DISCLAIMER	SIZE
B					SCALE:		A4
A	10-SEP-14	PDF	QL		SHEET: 2/2	WERI PART NO: DISCLAIMER	
REV	DATE	FILE	BY		DRAW: QL		