FACE VIEW - MALE INSERT		
3 POLE	4 POLE	5 POLE
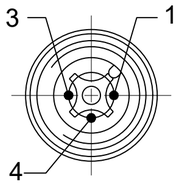	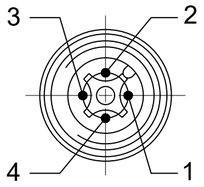	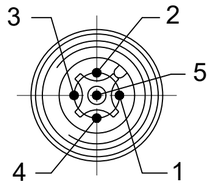
1 BROWN 2 NOT USED 3 BLUE 4 BLACK 5 NOT USED	1 BROWN 2 WHITE 3 BLUE 4 BLACK 5 NOT USED	1 BROWN 2 WHITE 3 BLUE 4 BLACK 5 GRAY

B	PART NO	ENGINEERING NO.	FINISHED LENGTH	POLES	CABLE DIA.
	1200651113	803006K05M006	0.6M [2FT]	3	.20 [5.1]
	1200652049	804006K05M150	15M [49FT 2 IN]	4	.21 [5.3]
	1200652470	805006K05M300	30M [98FT 5 IN]	5	.23 [5.8]

NOTES:
1. MATERIAL: AS NOTED
2. FINISH: AS NOTED
3. ELECTRICAL:
   VOLTAGE: 250V
   CURRENT: 4A
4. TEMP RATING: -20°TO +105°C (B)
5. PROTECTION: IP67 (WHEN MATED)
6. COUPLING THREAD: M12X1
7. UL RECOGNIZED FILE: E152210
   CSA CERTIFIED FILE: LR6837
8. ALL DIMENSIONS ARE FOR REFERENCE
   UNLESS TOLERANCED OR NOTED OTHERWISE

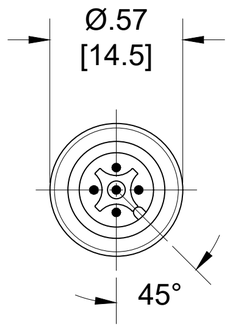

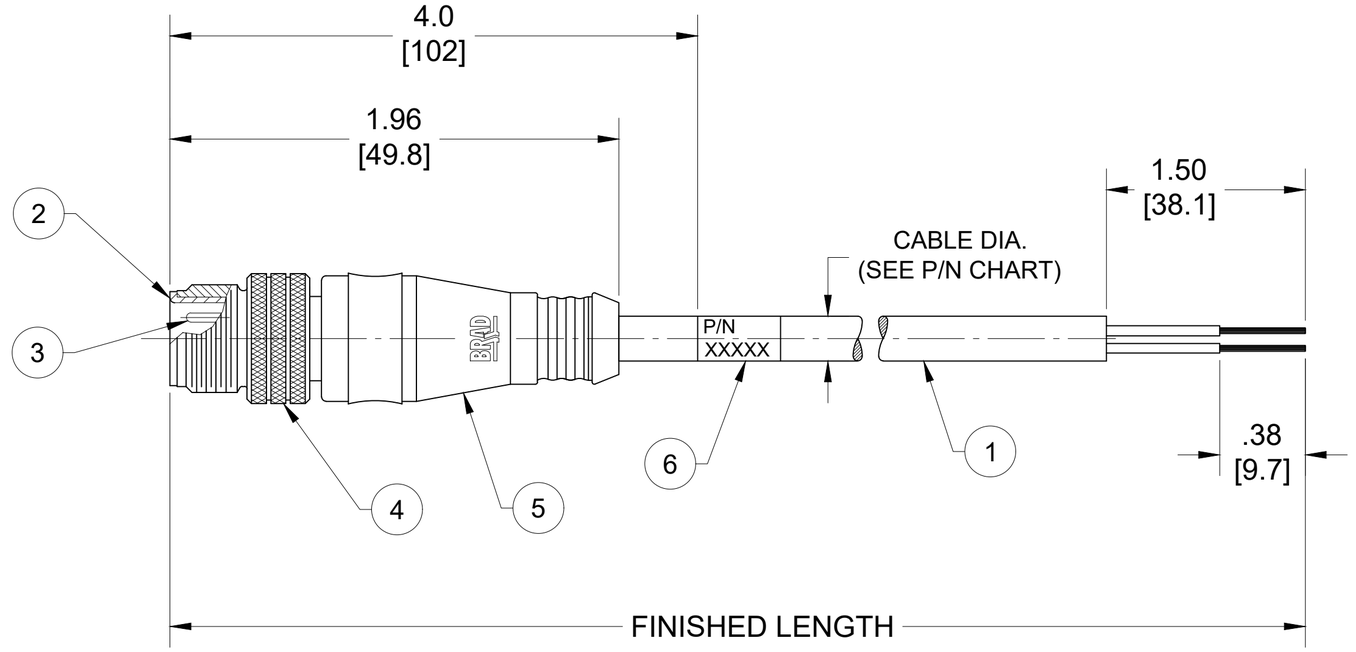

CABLE FLEX CHARACTERISTICS

TORSIONAL FLEX TEST	10 MILLION CYCLES PER MIL-C-13777G
BEND FLEX TEST	10 MILLION CYCLES PER MIL-C-13777G
WELD SLAG RESISTANCE	WOODHEAD STANDARD S-300

6	WRAP LABEL	VINYL	BLACK/YELLOW	
5	OVERMOLD	TPC	YELLOW	(B)
4	COUPLING NUT	BRASS	NICKEL PLATED	
3	CONTACT PIN	COPPER ALLOY	GOLD OVER NICKEL	
2	MALE INSERT	PUR	BLACK	
1	#22 AWG CABLE	TPE JACKET	YELLOW	
ITEM	DESCRIPTION	MATERIAL	FINISH	

PART NO. MATRIX

803006K05M006

POLES (3, 4 & 5)

FINISHED LENGTH
M005 = 0.5 METER
M010 = 1 METER
M100 = 10 METER

CABLE LENGTH TOLERANCES
<.3M [1FT]: +19mm-0 [+.75in-0]
.3 - .9M [1 - 3FT]: +44.5mm-0 [+1.75in-0]
.9 - 1.8M [3 - 6FT]: +55.6mm-0 [+2.19in-0]
1.8 - 3.7M [6 - 12FT: +88.9mm-0 [+3.50in-0]
3.7 - 7.3M [12 - 24FT]: +165.1mm-0 [+6.50in-0]
7.3-14.6M [24 - 48FT]: +317.5mm-0 [+12.50in-0]
14.6 - 30.5M [48-100FT]: +622.3mm-0 [+24.50in-0]
OVER 30M [100FT] +2% OF FINISHED LENGTH

THIS DRAWING CONTAINS INFORMATION THAT IS PROPRIETARY TO MOLEX ELECTRONIC TECHNOLOGIES, LLC AND SHOULD NOT BE USED WITHOUT WRITTEN PERMISSION

FUNCTIONAL SYMBOLS
FA=0
FC=0
FP=0
DIVISIONAL SYMBOLS

DIMENSION UNITS: INCH/MM
SCALE: NTS

GENERAL TOLERANCES (UNLESS SPECIFIED)

	mm	INCH
4 PLACES	±----	±----
3 PLACES	±----	±----
2 PLACES	±----	±----
1 PLACE	±----	±----
0 PLACES	±----	±----
ANGULAR TOL ±	---- °	

DRAFT WHERE APPLICABLE MUST REMAIN WITHIN DIMENSIONS

CURRENT REV DESC: ITEM #6 WAS TPE. MODIFIED TEMP RATING & PN CHART

EC NO: 671333
DRWN: ABENJAMINLW 2021/04/30
CHK'D: RSTONE 2021/07/23
APPR: BWOODMAN 2021/07/28

INITIAL REVISION:
DRWN: RSTONE 2018/11/01
APPR: BWOODMAN 2018/11/30

THIRD ANGLE PROJECTION | DRAWING: C-SIZE | SERIES: 120065 | MATERIAL NUMBER: SEE CHART | CUSTOMER: GENERAL MARKET | SHEET NUMBER: 1 OF 1

molex

MICRO-CHANGE CORDSET, M12,
3-5 POLE, MALE, STRAIGHT, SINGLE KEY,
#22 AWG TPE HI-FLEX

PRODUCT CUSTOMER DRAWING

DOCUMENT NUMBER	DOC TYPE	DOC PART	REVISION
SD-120065-114	PSD	001	B

DOCUMENT STATUS	P1	RELEASE DATE	2021/07/28 23:37:21

FORMAT: IN-ACAD-tb-prod-C
REVISION: B
DATE: 2020/01/14