BGA Heat Sink - High Performance maxiFLOW/superGRIP

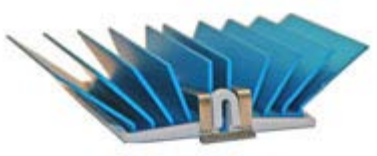

ATS Part#:	**ATS-X50290B-C1-R0**
Description:	29.00 x 29.00 x 7.50 mm BGA Heat Sink - High Performance maxiFLOW/superGRIP
Heat Sink Type:	maxiFLOW
Heat Sink Attachment:	superGRIP
Equivalent Part Number:	N/A

**Image above is for illustration purpose only.*

Features & Benefits

- Designed for 29 x 29 mm components
- Requires minimal space around the component's perimeter; ideal for densely populated PCBs
- Allows the heat sink to be detached and reattached without damaging the component or the PCB, an important feature in the event a PCB may need to be reworked
- Strong, uniform attachment force helps achieve maximum performance from phase-changing TIMs
- Eliminates the need to drill mounting holes in the PCB

Thermal Performance

AIR VELOCITY		@200 LFM 1.0 M/S	@300 LFM 1.5 M/S	@400 LFM 2.0 M/S	@500 LFM 2.5 M/S	@600 LFM 3.0 M/S	@700 LFM 3.5 M/S	@800 LFM 4.0 M/S
THERMAL RESISTANCE	Unducted Flow	7.4 °C/W	5.9 °C/W	5 °C/W	4.5 °C/W	4.1 °C/W	3.8 °C/W	3.6 °C/W
	Ducted Flow	5.6	N/A	N/A	N/A	N/A	N/A	N/A

Product Detail

Schematic Image	Dimension A	Dimension B	Dimension C	Dimension D	TIM	Finish
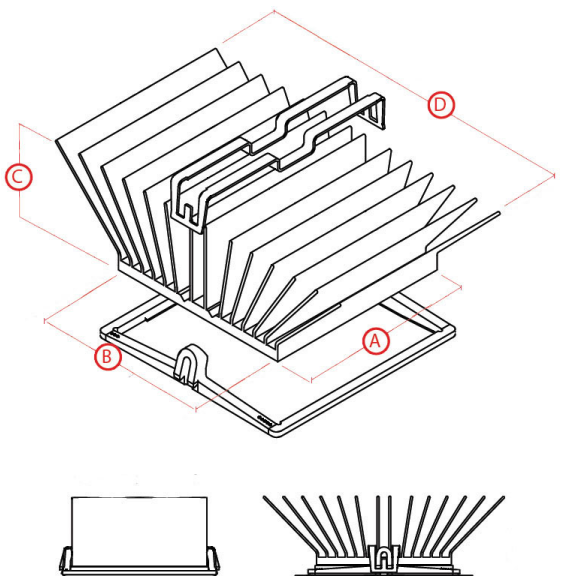 **Image above is for illustration purpose only.*	29.00 mm	29.00 mm	7.50 mm	42.4 mm	T766	BLUE-ANODIZED

Notes:

- Dimension A and B refer to component size.
- Dimension C is the heat sink height from the bottom of the base to the top of the fin field.
- Thermal performance data are provided for reference only. Actual performance may vary by application.
- ATS reserves the right to update or change its products without notice to improve the design or performance.
- ATS certifies that this heat sink assembly is RoHS-6 and REACH compliant.
- Contact ATS to learn about custom options available.

For more information, to find a distributor or to place an order, please contact us at 781-769-2800 (North America), **sales@qats.com** or **www.qats.com**.

© 2013 Advanced Thermal Solutions, Inc. | 89-27 Access Road | Norwood MA | 02062 | USA

ATS ADVANCED THERMAL SOLUTIONS, INC. Innovations in Thermal Management®