FEMALE (B) FRONT VIEW

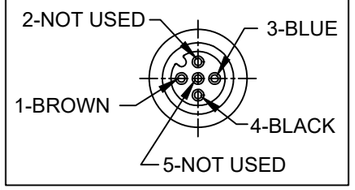

FEMALE (A) FRONT VIEW

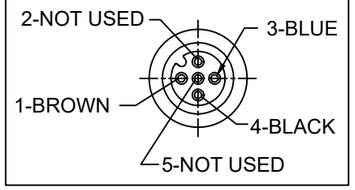

(A) PART NO	ENGINEERING NO.	FINISHED LENGTH
1200680175	884A30A09M003	0.3M [1 FT]
1200680176	884A30A09M006	0.6M [2 FT]
1200680177	884A30A09M010	1M [3 FT 3 IN]

(A) PART NO. MATRIX

884A30A09M003

FINISHED LENGTH:
M005= 0.5 METER
M010= 1 METER
M100= 10 METER

MALE INSERT - FRONT VIEW

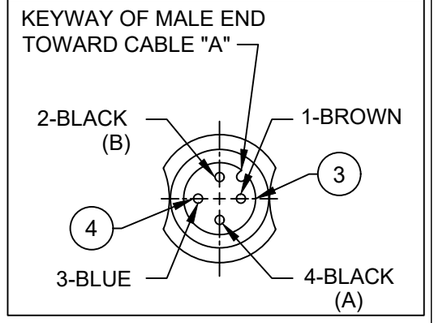

NOTES:
1. MATERIAL: AS NOTED
2. FINISH: AS NOTED
3. ELECTRICAL:
   VOLTAGE: 250V (A)
   CURRENT: 4A
4. TEMP RATING: -20°TO +105°C (A)
5. PROTECTION: IP67 (WHEN MATED)
6. COUPLING THREAD:
   FEMALE: M12 X 1 INTERNAL THD.
   MALE: M12 X 1 EXTERNAL THD.
7. UL RECOGNIZED FILE: E152210 (A)
   CSA CERTIFIED FILE: LR6837
8. ALL DIMENSIONS ARE FOR REFERENCE
   UNLESS TOLERANCED OR NOTED OTHERWISE

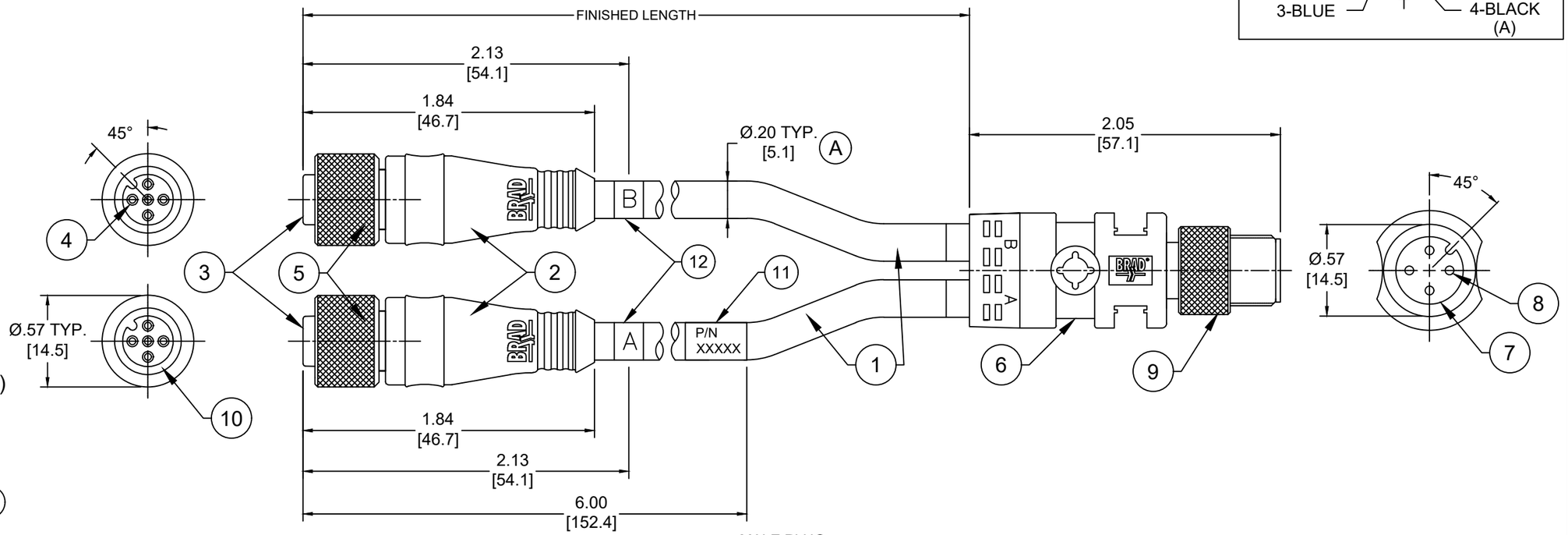

ITEM	DESCRIPTION	MATERIAL	FINISH	
12	ID LABEL	VINYL	BLACK/WHITE	(A)
11	WRAP LABEL	VINYL	BLACK/YELLOW	(A)
10	O-RING	VITON	RED	
9	MALE COUPLING NUT	BRASS	NICKEL PLATED	
8	CONTACT PIN	COPPER ALLOY	GOLD OVER NICKEL	
7	MALE INSERT	PUR	BLACK	
6	MALE OVERMOLD	PUR	YELLOW	(A)
5	FEMALE COUPLING NUT	BRASS	NICKEL PLATED	
4	CONTACT SOCKET	COPPER ALLOY	GOLD OVER NICKEL	
3	FEMALE INSERT	PUR	BLACK	
2	FEMALE OVERMOLD	PUR	YELLOW	(A)
1	CABLE #22-3	PVC	YELLOW	

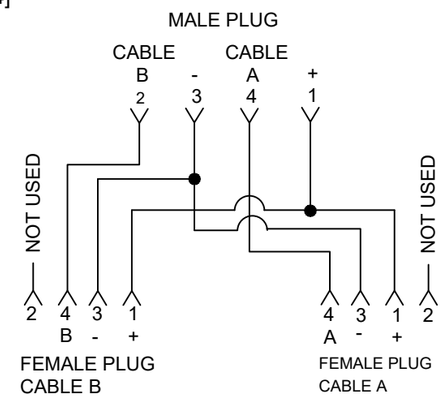

WIRING SCHEMATIC

(A)

CABLE LENGTH TOLERANCES
<.3M [1FT]: +19mm-0 [+.75in-0]
.3 - .9M [1 - 3FT]: +44.5mm-0 [+1.75in-0]
.9 - 1.8M [3 - 6FT]: +55.6mm-0 [+2.19in-0]
1.8 - 3.7M [6 - 12FT: +88.9mm-0 [+3.50in-0]
3.7 - 7.3M [12 - 24FT]: +165.1mm-0 [+6.50in-0]
7.3-14.6M [24 - 48FT]: +317.5mm-0 [+12.50in-0]
14.6 - 30.5M [48-100FT]: +622.3mm-0 [+24.50in-0]
OVER 30M [100FT] +2% OF FINISHED LENGTH

FUNCTIONAL SYMBOLS
EA=0
EC=0
EP=0
DIVISIONAL SYMBOLS

THIS DRAWING CONTAINS INFORMATION THAT IS PROPRIETARY TO MOLEX ELECTRONIC TECHNOLOGIES, LLC AND SHOULD NOT BE USED WITHOUT WRITTEN PERMISSION

DIMENSION UNITS	SCALE
INCH/MM	NTS

GENERAL TOLERANCES (UNLESS SPECIFIED)

	mm	INCH
4 PLACES	±----	±----
3 PLACES	±----	±----
2 PLACES	±----	±----
1 PLACE	±----	±----
0 PLACES	±----	±----
ANGULAR TOL ± ---- °		

DRAFT WHERE APPLICABLE MUST REMAIN WITHIN DIMENSIONS

CURRENT REV DESC: ITEM 2 & 6 WAS TPU & 11 WAS MYLAR. ADDED ITEM-12, UL, CSA, CABLE DIA, TOL CHART & PN MATRIX. UPDATED TEMP RATING AND VOLTAGE WAS 30VDC

EC NO:	669893	
DRWN:	ABENJAMINLW	2021/03/23
CHK'D:	RSTONE	2021/07/12
APPR:	BWOODMAN	2021/07/14
INITIAL REVISION:		
DRWN:	BBRAUCH	2010/02/08
APPR:	NSTAUDIG	2010/02/15

molex

MICRO-CHANGE CORDSET-SPLITTER
M12, 4-3 POLE, MALE-FEMALE, STRAIGHT, SINGLE KEY, 22 AWG

PRODUCT CUSTOMER DRAWING

DOCUMENT NUMBER	DOC TYPE	DOC PART	REVISION
SD-120068-024	PSD	001	A

THIRD ANGLE PROJECTION	DRAWING	SERIES	MATERIAL NUMBER	CUSTOMER	SHEET NUMBER
	A3-SIZE	120068	SEE CHART	GENERAL MARKET	1 OF 1

DOCUMENT STATUS	P1	RELEASE DATE	2021/07/14 21:16:12

FORMAT: ACAD-lb-prod-A3
REVISION: B
DATE: 2020/01/14