User's Guide

TLIN2029A-Q1 Evaluation Module

ABSTRACT

The TLIN2029A-Q1 evaluation module (EVM) is described in this user's guide. This EVM helps designers evaluate device performance, support fast development, and analyze automotive local interconnect network (LIN) systems using TLIN2029A-Q1 and TLIN1029A-Q1 LIN physical layer transceiver devices.

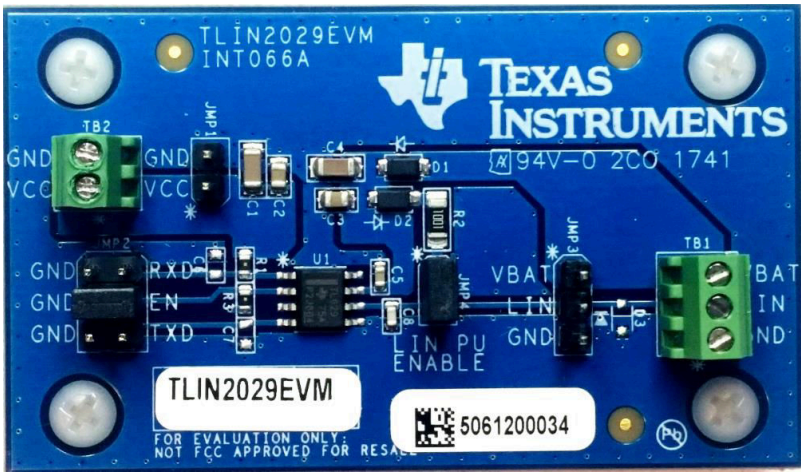

Figure 1-1. TLIN2029EVM Board

Table of Contents

1 Introduction 2
1.1 Features 2
1.2 Description 2
2 EVM Setup and Requirements 2
2.1 Commander Mode 2
2.2 Responder Mode 2
3 Board Layout 3
4 Schematic and Bill of Materials 4
4.1 Schematic 4
4.2 Bill of Materials 5
5 Revision History 6

List of Figures

Figure 1-1. TLIN2029EVM Board 1
Figure 3-1. Top Layer 3
Figure 3-2. Bottom Layer 3
Figure 4-1. TLIN2029EVM Schematic 4

List of Tables

Table 4-1. Bill of Materials 5

Trademarks

All trademarks are the property of their respective owners.

Copyright © 2022 Texas Instruments Incorporated

1 Introduction

1.1 Features

The EVM supports the following features:

- *Commander Mode* and *Responder Mode* configurations
- Terminal block and header pins are available on all power and LIN bus connections
- An optional VCC rail and pullup resistors for EN input and RXD (open-drain) output

1.2 Description

The TLIN2029EVM provides users with the ability to evaluate TI's TLINx029A-Q1 family of single-channel, LIN transceivers. The EVM allows both commander and responder mode applications to be evaluated through the use of a single jumper that connects or disconnects the external 1-kΩ pullup resistor and series diode required in commander mode from the LIN bus.

The EVM has a low-voltage VCC rail that provides the voltage to the pullup resistors on the received data (RXD) open-drain output, and enable (EN) control input pins. The TLIN2029-Q1 supports a VIH from 2 V to 5.5 V, allowing operation with a variety of microcontrollers with common IO voltage levels such as 2.5 V, 3.3 V, and 5 V. Non-populated capacitor pads are available on the TXD and RXD pins to accommodate a variety of different tests requiring various capacitive load conditions.

The TLIN2029A-Q1 supports both 12 V and 24 V automotive applications and is operated with a supply voltage from 4 V to 48 V, plus an extended bus fault protection of ±60 V. Use the EVM to evaluate the TLIN1029A-Q1 device for 12-V automotive applications by replacing the TLIN2029A-Q1 with a TLIN1029A-Q1 transceiver.

Furthermore, the TLINx029A-Q1 transceivers include internally-protected bus terminals with greater than ±8-kV HBM and IEC ESD protection levels. If additional ESD protection is desired, a non-populated diode pad is available on the LIN bus to accommodate any SOD323 diode. Both headers and wire-terminals are provided on the power and LIN bus connections to allow the EVM to be evaluated in a larger system while still allowing for test equipment to be connected to the signals under test.

2 EVM Setup and Requirements

Use the following equipment to evaluate the performance of the TLIN2029A-Q1 device:

- Power supply capable of supplying the desired supply voltage. Typical LIN applications use 12 V or 24 V, but the TLIN2029A-Q1 will operate with any supply voltage from 4 V to 48 V. Connect this voltage across the VBAT and GND pins of either the TB1 or JMP3 connectors.
- Power supply capable of supplying the desired IO pin voltage from 2 V to 5.5 V. Connect this voltage across the VCC and GND pins of either the TB2 or JMP1 connectors.
- If the LIN bus interface is to be observed on an oscilloscope, use probes capable of tolerating voltages as large as VBAT.
- The logic interface pins (TXD, RXD, and EN) may interface to a microcontroller, pattern generator, or logic analyzer with logic levels matching the VCC voltage.

2.1 Commander Mode

To configure the board for commander mode, place a shunt on JMP4 to connect the external 1-kΩ resistor and series diode to the LIN bus per the LIN specification.

2.2 Responder Mode

To configure the board for responder mode, remove the shunt on JMP4 to disconnect the external 1-kΩ resistor and series diode from the LIN bus per the LIN specification.

Copyright © 2022 Texas Instruments Incorporated

3 Board Layout

The board layout uses two layers (top and bottom) with most of the routing placed on the top layer (see Figure 3-1 and Figure 3-2). The TLIN2029A-Q1 device has a flow through pinout with the logic interface pins on one side of the device and the LIN bus pins on the other side resulting in simple and straight forward routing of signal and power nets.

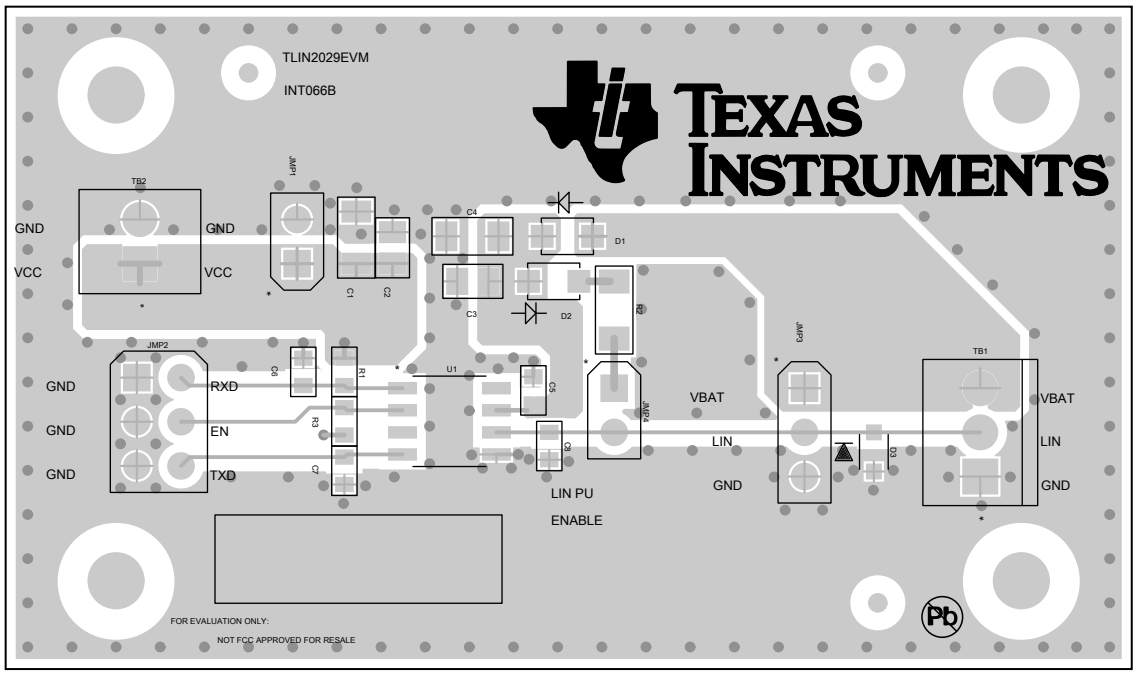

Figure 3-1. Top Layer

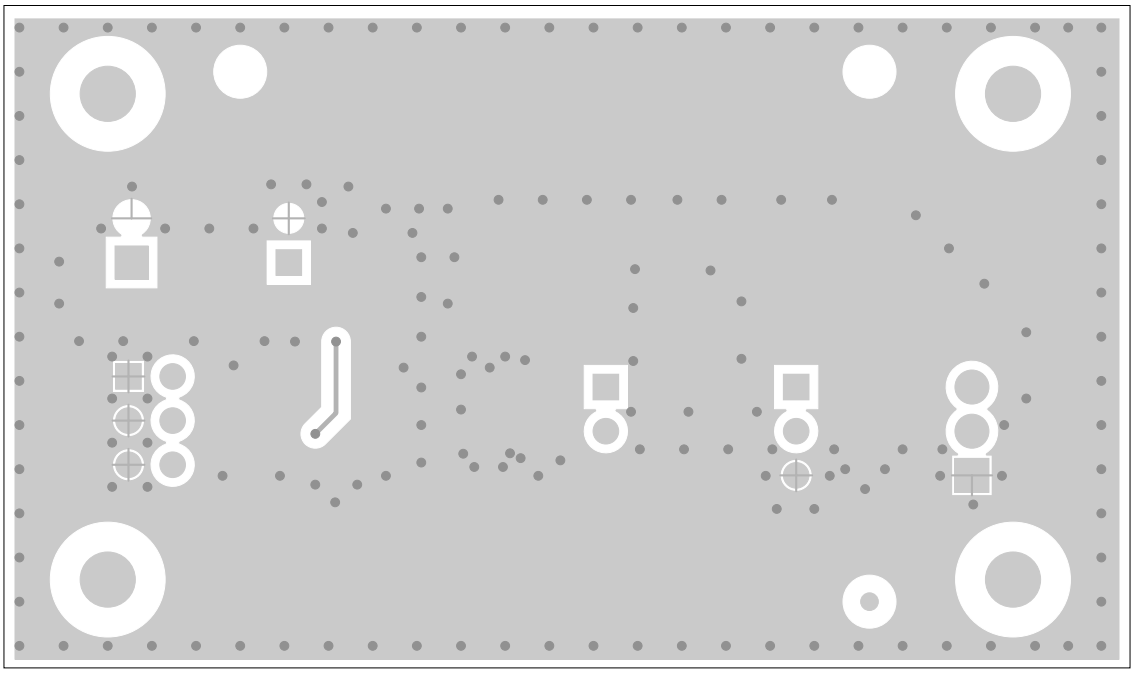

Copyright © 2017, Texas Instruments Incorporated

Figure 3-2. Bottom Layer

Copyright © 2022 Texas Instruments Incorporated

4 Schematic and Bill of Materials

4.1 Schematic

Figure 4-1 illustrates the EVM schematic.

NOTES:
1. Supply Voltage VBAT and VSUP: 4 V to 45 V
2. LIN Bus Input Voltage VLIN: 0 V to 36V
3. If used in Commander Mode, place a shunt on JMP4 and make sure VSUP < 36 V
4. VCC Voltage: 0 V to 5.25 V
5. VCC is only used to provide a voltage for the RXD and EN Pull Up resistors.

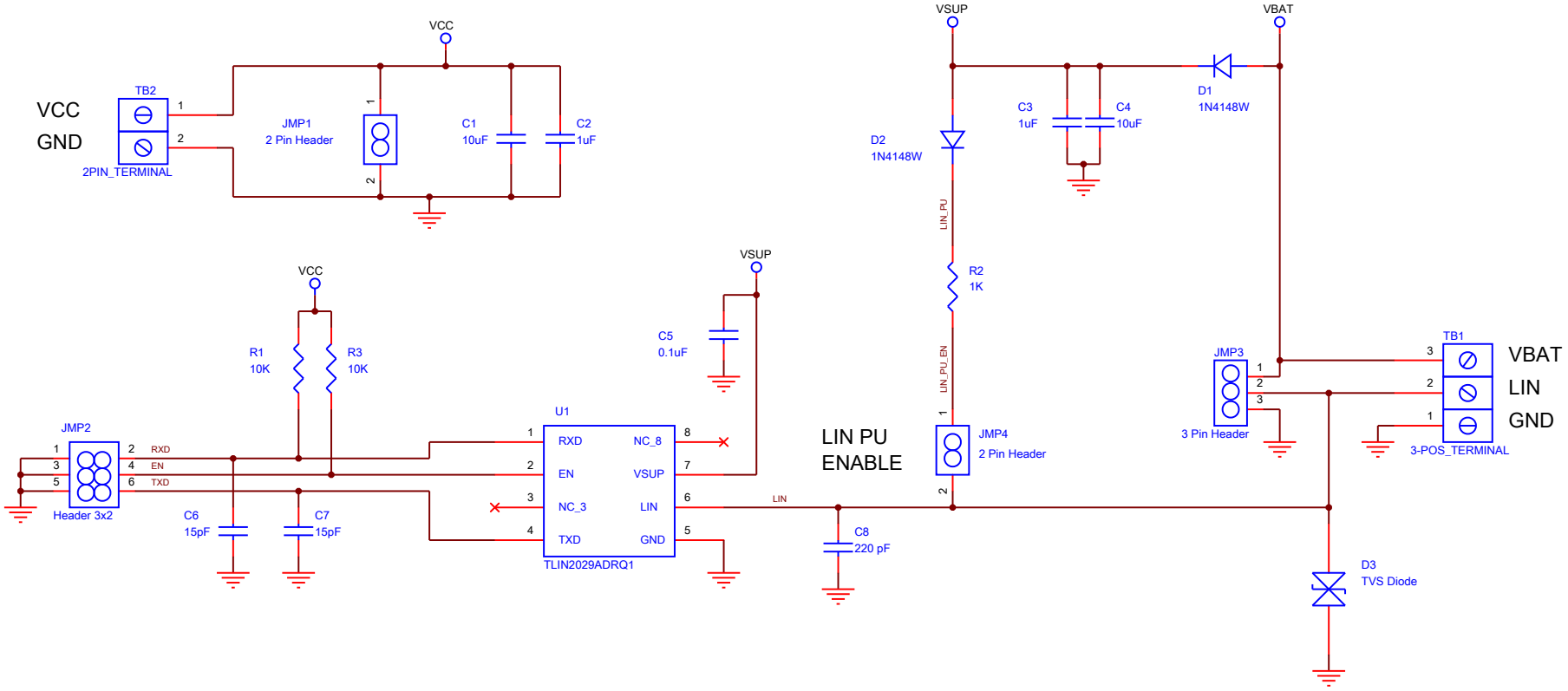

Figure 4-1. TLIN2029EVM Schematic

Copyright © 2022 Texas Instruments Incorporated

4.2 Bill of Materials

Table 4-1 lists the EVM BOM.

Table 4-1. Bill of Materials

Designator	QTY	Value	Description	Package Reference	Part Number	Manufacturer
C1,C4	2	10 µF, 50 V	CAP, CERM, 10 µF, 50 V, ±10%, X5R, 1206	1206	CL31A106KBHNNNE	Samsung Electro-Mechanics America, Inc.
C2,C3	2	1 µF, 50 V	CAP, CERM, 1 µF, 50 V, ±10%, X7R, 0805	0805	CL21B105KBFNNNE	Samsung Electro-Mechanics America, Inc.
C5	1	0.1 µF, 50 V	CAP, CERM, 0.1 µF, 50 V, ±20%, X7R, 0603	0603	C0603C104M5RACTU	Kemet
C6,C7	0	15 pF	CAP, CERM, 15 pF, 50 V, ±5%, C0G/NP0, 0603	0603	CL10C150JB8NNNC	Samsung Electro-Mechanics America, Inc.
C8	1	220 pF	CAP, CERM, 220 pF, 50 V, ±1%, C0G/NP0, 0603	0603	C0603C221F5GACTU	Kemet
D1,D2	2	1N4148W	Diode, General Purpose, 100 V, 150 mA, SOD123	SOD123	1N4148W-TP	Micro Commercial Co
D3	0	TVS Diode	Diode, Zener, 15 V / 24 V, 3 A, SOD323	SOD323	PESD1LIN,115	Nexperia USA Inc.
FID1,FID2,FID3,FID4,FID5,FID6	6	Fiducial	Fiducial mark. There is nothing to buy or mount.	Fiducial	N/A	N/A
H1,H2,H3,H4	4	NY PMS 440 0025 PH	Machine Screw, Round, #4-40 x 1/4, Nylon, Philips panhead	Screw	NY PMS 440 0025 PH	B&F Fastener Supply
H5,H6,H7,H8	4	1902C	Standoff, Hex, 0.5"L #4-40 Nylon	Standoff	1902C	Keystone
JMP1,JMP4	2	2 Pin Header	Header, 100mil, 2x1, Gold, TH	2x1 Header	TSW-102-07-G-S	Samtec
JMP2	1	Header 3x2	Header, 100mil, 3x2, Gold, TH	3x2 Header	TSW-103-07-G-D	Samtec
JMP3	1	3 Pin Header	Header, 100mil, 3x1, Gold, TH	3x1 Header	TSW-103-07-G-S	Samtec
LB1	1	PCB_Label	Thermal Transfer Printable labels, 0.650" W x 0.200" H - 10,000 per roll	PCB Label 0.650"H x 0.200"W	THT-14-423-10	Brady
M1,M2,M3,M4	4	MountingHole_125_NPTH	Mechanical mounting hole. There is nothing to buy or mount.	NPTH_125mil	N/A	N/A
PCB1	1	PCB	Printed Circuit Board	PCB	INT066	ANY
R1,R3	2	10K,1/4W,1%	RES, 10.0 k, 1%, 0.25 W, 0603	0603	ESR03EZPF1002	Rohm Semiconductor
R2	1	1K,1/4W,1%	RES, 1.00 k, 1%, 0.25 W, 1206	1206	RC1206FR-071KL	Yageo
TB1	1	3-POS_TERMINAL	3 Position Wire to Board Terminal Block Horizontal with Board 0.100" (2.54 mm) Through Hole	2.54mm	282834-3	TE Connectivity AMP Connectors
TB2	1	2PIN_TERMINAL	2 Position Wire to Board Terminal Block Horizontal with Board 0.100" (2.54 mm) Through Hole	2.54mm	282834-2	TE Connectivity AMP Connectors
U1	1	TLIN2029A-Q1	Automotive Local Interconnect Network Transceiver, 8-SOIC	8-SOIC	TLIN2029ADRQ1	Texas Instruments

Copyright © 2022 Texas Instruments Incorporated

5 Revision History

NOTE: Page numbers for previous revisions may differ from page numbers in the current version.

Changes from Revision * (October 2017) to Revision A (February 2022)	Page
• Updated the numbering format for tables, figures, and cross-references throughout the document	2
• Changed all instances of legacy terminology to commander and responder where LIN is mentioned	2

Copyright © 2022 Texas Instruments Incorporated

IMPORTANT NOTICE AND DISCLAIMER

TI PROVIDES TECHNICAL AND RELIABILITY DATA (INCLUDING DATA SHEETS), DESIGN RESOURCES (INCLUDING REFERENCE DESIGNS), APPLICATION OR OTHER DESIGN ADVICE, WEB TOOLS, SAFETY INFORMATION, AND OTHER RESOURCES “AS IS” AND WITH ALL FAULTS, AND DISCLAIMS ALL WARRANTIES, EXPRESS AND IMPLIED, INCLUDING WITHOUT LIMITATION ANY IMPLIED WARRANTIES OF MERCHANTABILITY, FITNESS FOR A PARTICULAR PURPOSE OR NON-INFRINGEMENT OF THIRD PARTY INTELLECTUAL PROPERTY RIGHTS.

These resources are intended for skilled developers designing with TI products. You are solely responsible for (1) selecting the appropriate TI products for your application, (2) designing, validating and testing your application, and (3) ensuring your application meets applicable standards, and any other safety, security, regulatory or other requirements.

These resources are subject to change without notice. TI grants you permission to use these resources only for development of an application that uses the TI products described in the resource. Other reproduction and display of these resources is prohibited. No license is granted to any other TI intellectual property right or to any third party intellectual property right. TI disclaims responsibility for, and you will fully indemnify TI and its representatives against, any claims, damages, costs, losses, and liabilities arising out of your use of these resources.

TI’s products are provided subject to TI’s Terms of Sale or other applicable terms available either on ti.com or provided in conjunction with such TI products. TI’s provision of these resources does not expand or otherwise alter TI’s applicable warranties or warranty disclaimers for TI products.

TI objects to and rejects any additional or different terms you may have proposed.

Mailing Address: Texas Instruments, Post Office Box 655303, Dallas, Texas 75265
Copyright © 2022, Texas Instruments Incorporated