KYCON, Inc. 305 Digital Drive, Morgan Hill, CA 95037 (408)494-0330

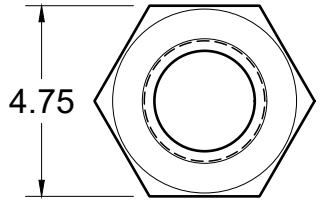

Material: Brass

Finish: Nickel

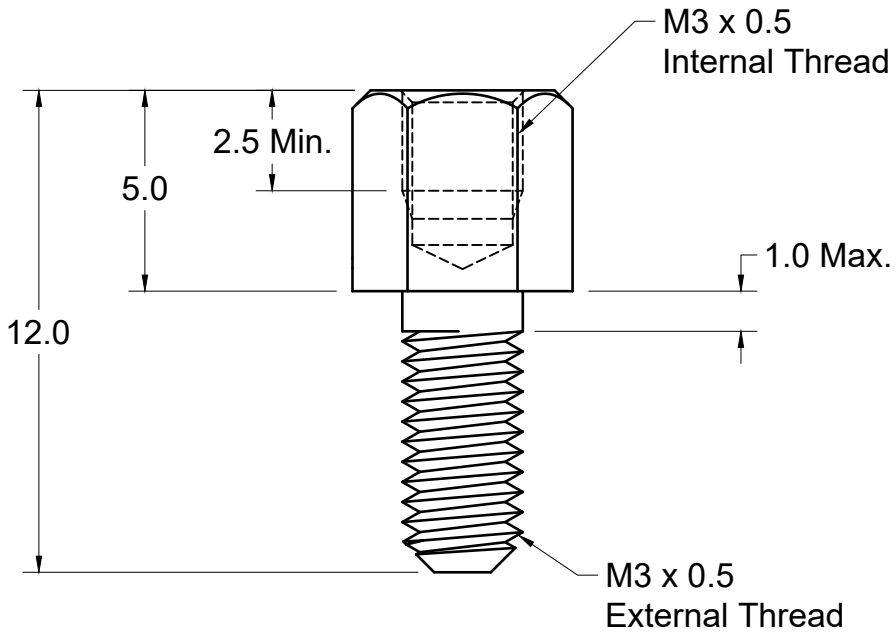

RoHS COMPLIANT

Tolerances
X.X ± 0.10
X.XX ± 0.05
Unless Stated Otherwise

REV.	DATE	DESCRIPTION	REV. BY	CHK. BY
A1	06/19/07	New Drawing	A. Frederick	H. MA
A2	06/11/18	ECO #18-028	G. Serrato	D. Shehan
B0	08/16/21	ECO #21-014	C. Kelleher	C. Furumasu

DRAWN BY	DATE
A. Frederick	06/11/07
	UNITS
	mm

JSX-M3131M

Hex. Jack Screw, RoHS Compliant

M3 Female, M3 Male

KYCON