GlobTek, Inc.
www.globtek.com
186 Veterans Drive,
Northvale, NJ 07647
Tel. (201) 784-1000
Fax (201) 784-0111

| | |
|---|---|
| Drawing Title: | GTM96600-6530-T2, ICT / ITE / Medical Power Supply/Class 2/Household Power Supply, Efficiency Level: USA DOE Level VI / Eco-design Directive 2009/125/EC, (EU) 2019/1782, Case Color/Style: GlobTek Black, Desktop/External, Regulated Switchmode AC-DC Power Supply AC Adaptor, Input Rating: 100-240V~, 50-60Hz, IEC 60320/C8 , Output Rating: 65W, 30.0V@2.16A, Output Configuration: 1500 mm, 18/2 Cond, Round Black, T-plug system (includes 5.5x2.5, 5.5x2.1, 3.5x1.3mm plugs in each kit), Ferrite: Core Size: 14.2*28.5*8.2, GlobTek Black, GT Cord # C22145, Pin Out: Polarity Configuration T00 All plugs are Medical Grade, Locking, Polarized once installed, and single use only. Product demonstration link: https://en.globtek.com/news/t00-changeable-output-plug-system-for-power-supplies MOLDED CONNECTORS AVAILABLE, Blades/Input Cord: (Order Separately), Approvals: Korea (41V-54V Only); EAC; CE; China RoHS; Double Insulation; cETLus 60601-1; FCC; PSE; PSE; PSE; Level VI; RoHS; Ukraine; VCCI; WEEE; CB 60601-1; IP41; S-Mark IEC/EN 60601-1; CB 62368; Taiwan BSMI; UKCA; ETL; Conforms to 62368-1; Morocco; Korea (9-15V Only); ETL 62368; |
| Model No. | GTM96600-6530-T2 |
| Part No./Ordering No. | TR9KR2166T00CIMR6B — Rev C |

In Addition to GlobTek Inc.'s renewed ISO9001:2015 - Quality Management System Certification, GlobTek Inc. is now certified to:

ISO13485:2016 - Medical Devices Quality Management System Certification
ISO14001:2015 - Environmental Management System Certification

ISO Certificates are available online at https://www.globtek.com/iso-certificates/

The acceptance of this specification and use of the product described in this document indicates the acceptance and binding of the customer to Globtek TERMS AND CONDITIONS (attached to the end of this document), which supersede all other agreements, terms, and conditions (https://en.globtek.com/terms-and-conditions/).

The purchaser of this product (Customer) agrees that it is their sole responsibility to determine suitability/fitness of the product described in this specification for their application and to take precautions for protection against any hazards attendant to the handling and use of the product.

Footnote:

GlobTek Inc. will not be liable for the safety and performance of these power supplies/battery packs if unauthorized access and repair occurs. End user should consult applicable UL, CSA or EN standards for proper installation instruction.

Limitation of Use:

GlobTek products are intended for use with commercial, medical, and/or industrial equipment only. GlobTek product are not authorized for use as mission critical components in life support hazardous environment, nuclear or aircraft applications without prior written approval from the CEO of GlobTek Inc.
Contents of this document are subject to change without prior notice.

## Customer Approval of Specification:

Please approve, sign and send back to GlobTek so we can complete order processing.
A delay in receipt of this form will delay delivery schedule.

| | |
|---|---|
| Company Name: | Customer P/N: |
| Quote Number: | Date: |
| Authorized Representative Name: | Authorized Representative Signature: |

PROPRIETARY INFORMATION
PROPRIETARY OF GLOBTEK, INC. ANY REPRODUCTION, DISCLOSURE OR USE OF THIS DRAWING, IN WHOLE OR IN PART, IS HEREBY PROHIBITED EXCEPT AS SPECIFIED IN WRITING BY GLOBTEK, INC. © GlobTek, Inc. 2018 - 2022
guest /09/06/2022 8:31:00 PM CLONED FROM TR9CI2700ML4-N(RVB)

GlobTek, Inc.
www.globtek.com
186 Veterans Drive,
Northvale, NJ 07647
Tel. (201) 784-1000
Fax (201) 784-0111

Drawing Title: GTM96600-6530-T2, ICT / ITE / Medical Power Supply/Class 2/Household Power Supply, Efficiency Level: USA DOE Level VI / Eco-design Directive 2009/125/EC, (EU) 2019/1782, Case Color/Style: GlobTek Black, Desktop/External, Regulated Switchmode AC-DC Power Supply AC Adaptor, Input Rating: 100-240V~, 50-60Hz, IEC 60320/C8 , Output Rating: 65W, 30.0V@2.16A, Output Configuration: 1500 mm, 18/2 Cond, Round Black, T-plug system (includes 5.5x2.5, 5.5x2.1, 3.5x1.3mm plugs in each kit), Ferrite: Core Size: 14.2*28.5*8.2, GlobTek Black, GT Cord # C22145, Pin Out: Polarity Configuration T00 All plugs are Medical Grade, Locking, Polarized once installed, and single use only. Product demonstration link: https://en.globtek.com/news/t00-changeable-output-plug-system-for-power-supplies MOLDED CONNECTORS AVAILABLE, Blades/Input Cord: (Order Separately), Approvals: Korea (41V-54V Only); EAC; CE; China RoHS; Double Insulation; cETLus 60601-1; FCC; PSE; PSE; PSE; Level VI; RoHS; Ukraine; VCCI; WEEE; CB 60601-1; IP41; S-Mark IEC/EN 60601-1; CB 62368; Taiwan BSMI; UKCA; ETL; Conforms to 62368-1; Morocco; Korea (9-15V Only); ETL 62368;

Model No. GTM96600-6530-T2

Part No./Ordering No. TR9KR2166T00CIMR6B — Rev C

# REVISION HISTORY

| REV | DESCRIPTION | SUB | DATE | APPROVED |
|---|---|---|---|---|
| C | Change Power Supply Information (Input Configuration) on page 2 from IEC 60320/C14 to IEC 60320/C8 | QA | 12/13/2018 | QA |
| B | Update packing | QA | 08/10/2018 | QA |
| A | Initial release | QA | 06/19/2018 | QA |

## POWER SUPPLY INFORMATION

| | |
|---|---|
| TYPE: | Desktop/External |
| TECHNOLOGY: | Regulated Switchmode AC-DC Power Supply AC Adaptor |
| CASE COLOR: | GlobTek Black |
| NAMEPLATE RATED INPUT: | 100-240V~, 50-60Hz, 1.5A |
| INPUT CONFIG: | IEC 60320/C8 |
| WATTS: | 65.0 |
| VOLTS OUT: | 30.0 |
| CURRENT OUT (Amps): | 2.16 |
| BLADE/CORD INCLUDED: | None (Order Separately) |
| BLADE/CORD INSTALLED: | None :(Order Separately) |
| INGRESS PROTECTION: | IP41 |
| GROUNDING CONFIGURATION: | (F1) Class II / Double Insulated |
| EFFICIENCY LEVEL: | USA DOE Level VI / Eco-design Directive 2009/125/EC, (EU) 2019/1782 |
| OUTPUT CONFIGURATION: | 1500 mm, 18/2 Cond, Round Black, T-plug system (includes 5.5x2.5, 5.5x2.1, 3.5x1.3mm plugs in each kit), Ferrite: Core Size: 14.2*28.5*8.2, GlobTek Black, GT Cord # C22145 |
| OVERMOLDED: | Yes |
| OUTPUT CONNECTOR GENDER: | not applicable |
| CONNECTOR PIN OUT: | Polarity Configuration T00 All plugs are Medical Grade, Locking, Polarized once installed, and single use only. Product demonstration link: https://en.globtek.com/news/t00-changeable-output-plug-system-for-power-supplies MOLDED CONNECTORS AVAILABLE |
| LABEL SPECS: | Standard GT,L-1186 |
| SPECIAL BARCODE LABEL MATERIAL: | No |
| PACK SPEC: | Packing for DT plug model with T00 plug and manual |
| USER MANUAL: | 809-DESKTOPUSERMANUAL on A4 paper |

PROPRIETARY INFORMATION
PROPRIETARY OF GLOBTEK, INC. ANY REPRODUCTION, DISCLOSURE OR USE OF THIS DRAWING, IN WHOLE OR IN PART, IS HEREBY PROHIBITED EXCEPT AS SPECIFIED IN WRITING BY GLOBTEK, INC. © GlobTek, Inc. 2018 - 2022
guest /09/06/2022 8:31:00 PM CLONED FROM TR9CI2700ML4-N(RVB)

GlobTek, Inc.
www.globtek.com
186 Veterans Drive,
Northvale, NJ 07647
Tel. (201) 784-1000
Fax (201) 784-0111

| | |
|---|---|
| Drawing Title: GTM96600-6530-T2, ICT / ITE / Medical Power Supply/Class 2/Household Power Supply, Efficiency Level: USA DOE Level VI / Eco-design Directive 2009/125/EC, (EU) 2019/1782, Case Color/Style: GlobTek Black, Desktop/External, Regulated Switchmode AC-DC Power Supply AC Adaptor, Input Rating: 100-240V~, 50-60Hz, IEC 60320/C8 , Output Rating: 65W, 30.0V@2.16A, Output Configuration: 1500 mm, 18/2 Cond, Round Black, T-plug system (includes 5.5x2.5, 5.5x2.1, 3.5x1.3mm plugs in each kit), Ferrite: Core Size: 14.2*28.5*8.2, GlobTek Black, GT Cord # C22145, Pin Out: Polarity Configuration T00 All plugs are Medical Grade, Locking, Polarized once installed, and single use only. Product demonstration link: https://en.globtek.com/news/t00-changeable-output-plug-system-for-power-supplies MOLDED CONNECTORS AVAILABLE, Blades/Input Cord: (Order Separately), Approvals: Korea (41V-54V Only); EAC; CE; China RoHS; Double Insulation; cETLus 60601-1; FCC; PSE; PSE; PSE; Level VI; RoHS; Ukraine; VCCI; WEEE; CB 60601-1; IP41; S-Mark IEC/EN 60601-1; CB 62368; Taiwan BSMI; UKCA; ETL; Conforms to 62368-1; Morocco; Korea (9-15V Only); ETL 62368; | |
| Model No. GTM96600-6530-T2 | |
| Part No./Ordering No. TR9KR2166T00CIMR6B | Rev C |

Notes/Modifications/Customizations (notes in this section supersede the values shown in the standard spec):

DIMENSIONS ARE IN MM UNLESS SPECIFIED OTHERWISE.

PROPRIETARY INFORMATION
PROPRIETARY OF GLOBTEK, INC. ANY REPRODUCTION, DISCLOSURE OR USE OF THIS DRAWING, IN WHOLE OR IN PART, IS HEREBY PROHIBITED EXCEPT AS SPECIFIED IN WRITING BY GLOBTEK, INC. © GlobTek, Inc. 2018 - 2022
guest /09/06/2022 8:31:00 PM CLONED FROM TR9CI2700ML4-N(RVB)

GlobTek, Inc.
www.globtek.com
186 Veterans Drive,
Northvale, NJ 07647
Tel. (201) 784-1000
Fax (201) 784-0111

| | |
|---|---|
| Drawing Title: GTM96600-6530-T2, ICT / ITE / Medical Power Supply/Class 2/Household Power Supply, Efficiency Level: USA DOE Level VI / Eco-design Directive 2009/125/EC, (EU) 2019/1782, Case Color/Style: GlobTek Black, Desktop/External, Regulated Switchmode AC-DC Power Supply AC Adaptor, Input Rating: 100-240V~, 50-60Hz, IEC 60320/C8 , Output Rating: 65W, 30.0V@2.16A, Output Configuration: 1500 mm, 18/2 Cond, Round Black, T-plug system (includes 5.5x2.5, 5.5x2.1, 3.5x1.3mm plugs in each kit), Ferrite: Core Size: 14.2*28.5*8.2, GlobTek Black, GT Cord # C22145, Pin Out: Polarity Configuration T00 All plugs are Medical Grade, Locking, Polarized once installed, and single use only. Product demonstration link: https://en.globtek.com/news/t00-changeable-output-plug-system-for-power-supplies MOLDED CONNECTORS AVAILABLE, Blades/Input Cord: (Order Separately), Approvals: Korea (41V-54V Only); EAC; CE; China RoHS; Double Insulation; cETLus 60601-1; FCC; PSE; PSE; PSE; Level VI; RoHS; Ukraine; VCCI; WEEE; CB 60601-1; IP41; S-Mark IEC/EN 60601-1; CB 62368; Taiwan BSMI; UKCA; ETL; Conforms to 62368-1; Morocco; Korea (9-15V Only); ETL 62368; | |
| Model No. GTM96600-6530-T2 | |
| Part No./Ordering No. TR9KR2166T00CIMR6B | Rev C |

ELECTRICAL SPECIFICATIONS

## Input

| | |
|---|---|
| Input Voltage: | Specified: 90-264VAC, Nameplate: 100-240VAC<br>100% rated load current for 90-264VAC<br>85% rated load current for 85-264VAC<br>100% rated load current for 110-370VDC |
| Input Frequency: | Specified: 47-63Hz, Nameplate: 50-60Hz |
| No Load Input Power: | <75mW @ 230VAC (EU CoC Tier 2 compliant) for ≤ 49W rating<br><150mW @ 230VAC (EU CoC Tier 2 compliant) for > 49W rating |
| Inrush Current: | 30A/60A max. (cold start @ 115V/230VAC) |
| Efficiency: | DoE Level VI and EU CoC Tier 2 compliant |

## Output

| | |
|---|---|
| Turn-on Delay: | 1 second max. @ 115VAC and full load |
| Output Regulation: | ± 5% (measured at output connector) |
| Line Regulation: | ± 0.5% typ. (measured at output connector) |
| Ripple: | 1% or 100mV, whichever is greater (using a 47µF low-ESR cap + 0.1µF ceramic capacitor, measured @ 20MHz BW, at output connector) |
| Transient Response: | 5% max. deviation, 1ms typ. recovery time (with 40% to 70% load step) |
| Hold-up Time: | 8ms typ. (nominal input voltage and full load) |
| Power Indicator: | Green LED |

## Protections

| | |
|---|---|
| Input Protection: | MOV transient suppressor, input line fusing |
| Over-Current Protection: | 110 - 160% of rated output current, auto-restart, current limit range determined by normal output power rating, not de-rated power rating |
| Short-Circuit Protection: | Auto-restart |
| Over-Voltage Protection: | 110 - 130%, latched off, cycle AC to reset |
| Over-Temperature Protection: | On-chip temperature sensor (integrated in primary-side switching controller), shut down at Tj = ~140°C, latched off, cycle AC to reset |

## Environmental

| | |
|---|---|
| MTBF: | 1,500,000 hours @ 25°C ambient, full load (Telcordia SR-332, Issue 3) |
| Operating Temperature: | -20°C to 40°C (full load) |
| Storage Temperature: | -30°C to 80°C |

PROPRIETARY INFORMATION
PROPRIETARY OF GLOBTEK, INC. ANY REPRODUCTION, DISCLOSURE OR USE OF THIS DRAWING, IN WHOLE OR IN PART, IS HEREBY PROHIBITED EXCEPT AS SPECIFIED IN WRITING BY GLOBTEK, INC. © GlobTek, Inc. 2018 - 2022
guest /09/06/2022 8:31:00 PM CLONED FROM TR9CI2700ML4-N(RVB)

| | |
|---|---|
| Humidity: | 0% to 95% relative humidity, non-condensing |
| Altitude: | 5000m |
| Cooling: | Convection |
| RoHS: | Complies with EU 2011/65/EU and China SJ/T 11363-2006 |
| Note 1: | Regarding operating temperature<br>a. See below de-rating table for output power capability at alternate temperature<br>b. Extended low-end temperature range available as a custom option |

## Safety

| | |
|---|---|
| Dielectric Withstand Voltage: | 4000VAC or 5656VDC from input to output<br>3000VAC or 4242VDC from input to earth (Class I models only) |
| Touch Current: | Class I: 20µA max.<br>Class II: 85µA max.<br>Class II F2: 20µA max. |
| Earth Leakage Current | Class I: 300µA max.<br>Class II: N/A |
| Means of Protection: | 2 x MOPP |
| Output Isolation Options: | Class I: C6 or C14 inlet (output negative tied to Earth contact)<br>Class II: C8 or C18 inlet<br>Class II FE: C6 or C14 inlet (output isolated from Earth contact)<br>Review isolation options by reading our white paper PSU Isolation and Identity. |
| Earth Continuity Test: | < 0.1Ω between earth pin (on AC inlet) and PCB termination point (Class I models only) |
| Compliant Standards: | See listing at end of this datasheet for specific standards |

## EMC

| | |
|---|---|
| Applicable Standards: | Medical: EN60601-1-2, 4th edition<br>Emissions: EN55032, EN61000-6-3, EN61000-6-4, CISPR11, CISPR22<br>Immunity: EN55024, EN61000-6-1, EN61000-6-2 |
| Conducted Emissions: | Class B, FCC Part 15, Class B (with resistive load) |
| Radiated Emissions: | Class B, FCC Part 15, Class B (with resistive load) |
| Harmonic Current Voltage Distortion: | EN61000-3-2, Class A |
| Voltage Fluctuations/Flicker: | EN61000-3-3 |
| Electrostatic Discharge (ESD) Immunity: | EN61000-4-2, 10KV contact discharge, 20KV air discharge |
| Radiated RF Immunity: | EN61000-4-3, 10V/m 80-1000MHz, 3V/m 1-2.7GHz, 80% 1KHz AM |
| EFT/Burst Immunity: | EN61000-4-4, 4KV/100kHz. |
| Line Surge Immunity: | EN61000-4-5, 2KV differential, 4KV common-mode |
| Conducted RF Immunity: | EN61000-4-6, 3VRMS, 80% 1KHz AM |
| Power Frequency Magnetic Field Immunity: | EN61000-4-8, 3A/m |
| Voltage Dip Immunity: | EN61000-4-11 |


PROPRIETARY INFORMATION
PROPRIETARY OF GLOBTEK, INC. ANY REPRODUCTION, DISCLOSURE OR USE OF THIS DRAWING, IN WHOLE OR IN PART, IS HEREBY PROHIBITED EXCEPT AS SPECIFIED IN WRITING BY GLOBTEK, INC. © GlobTek, Inc. 2018 - 2022
guest /09/06/2022 8:31:00 PM CLONED FROM TR9CI2700ML4-N(RVB)

GlobTek, Inc.
www.globtek.com
186 Veterans Drive,
Northvale, NJ 07647
Tel. (201) 784-1000
Fax (201) 784-0111

| | |
|---|---|
| Drawing Title: GTM96600-6530-T2, ICT / ITE / Medical Power Supply/Class 2/Household Power Supply, Efficiency Level: USA DOE Level VI / Eco-design Directive 2009/125/EC, (EU) 2019/1782, Case Color/Style: GlobTek Black, Desktop/External, Regulated Switchmode AC-DC Power Supply AC Adaptor, Input Rating: 100-240V~, 50-60Hz, IEC 60320/C8 , Output Rating: 65W, 30.0V@2.16A, Output Configuration: 1500 mm, 18/2 Cond, Round Black, T-plug system (includes 5.5x2.5, 5.5x2.1, 3.5x1.3mm plugs in each kit), Ferrite: Core Size: 14.2*28.5*8.2, GlobTek Black, GT Cord # C22145, Pin Out: Polarity Configuration T00 All plugs are Medical Grade, Locking, Polarized once installed, and single use only. Product demonstration link: https://en.globtek.com/news/t00-changeable-output-plug-system-for-power-supplies MOLDED CONNECTORS AVAILABLE, Blades/Input Cord: (Order Separately), Approvals: Korea (41V-54V Only); EAC; CE; China RoHS; Double Insulation; cETLus 60601-1; FCC; PSE; PSE; PSE; Level VI; RoHS; Ukraine; VCCI; WEEE; CB 60601-1; IP41; S-Mark IEC/EN 60601-1; CB 62368; Taiwan BSMI; UKCA; ETL; Conforms to 62368-1; Morocco; Korea (9-15V Only); ETL 62368; | |
| Model No. GTM96600-6530-T2 | |
| Part No./Ordering No. TR9KR2166T00CIMR6B | Rev C |

## Enclosure

| | |
|---|---|
| Housing: | High impact plastic, 94V0 polycarbonate, non-vented |
| AC Input Mechanical Options: | Desktop: C6, C7, C14, or C18 inlet<br>Hybrid: Desktop inlet or changeable blades for wall-plug-in style, Class I or Class II input |
| Markings: | Label and/or pad printed and/or laser-etched into case |

## Special Options

1. Removal of LED (cost reduction or aesthetic purpose)
2. Custom cordsets, various cordage types, and connector types
3. Custom markings
4. Short term output surge capability for motors or other high peak current loads. (Available up to 120W for 1 second at nameplate voltage range. Higher levels possible for limited input voltage range, or larger allowed voltage dip.)
5. Reduced leakage current
6. Tightened output voltage tolerance
7. Reduced output ripple level
8. Reduced output power rating
9. High reliability PCB laminate with plated through-holes for IPC610 Class 2 compliance
10. Low temperature option, down to -40°C
11. Special housing and cordset colors
12. "Back EMF" upgrade, for motor loads and other high inductance applications with reverse energy flow requirements
13. Improved ingress protection (IP) rating

## Output Connectors

- Several output connector options are available with various output current ratings. GlobTek can supply 10A rated 2.1mm and 2.5mm style DC Power Jacks, to complement our 10A output rated 2.1mm and 2.5mm DC power plugs used on our output cordsets.
- Please visit our real-time listing of mating connector product offering: https://en.globtek.com/news/high-current-coaxial-barrel-plug-jacks-for-high-wattage-power-supplies

TO ADDRESS SYSTEM-LEVEL EMI CONCERNS, FERRITE CHOKES/BEADS MAY BE ADDED/REVISED UPON REQUEST. A SAMPLE KIT OF GLOBTEK'S STANDARD FERRITES IS AVAILABLE UNDER GLOBTEK P/N: EMI-MITIGATION-KIT1

FOR ADDITIONAL INFORMATION, PLEASE READ OUR WHITE PAPER AT:
https://en.globtek.com/technical-articles/ferrite-kit-radiated-emi-suppression-kit-for-globtek-power-supplies-cable-assemblies

INGRESS PROTECTION: IP41

PROPRIETARY INFORMATION
PROPRIETARY OF GLOBTEK, INC. ANY REPRODUCTION, DISCLOSURE OR USE OF THIS DRAWING, IN WHOLE OR IN PART, IS HEREBY PROHIBITED EXCEPT AS SPECIFIED IN WRITING BY GLOBTEK, INC. © GlobTek, Inc. 2018 - 2022
guest /09/06/2022 8:31:00 PM CLONED FROM TR9CI2700ML4-N(RVB)

GlobTek, Inc.
www.globtek.com
186 Veterans Drive,
Northvale, NJ 07647
Tel. (201) 784-1000
Fax (201) 784-0111

Drawing Title: GTM96600-6530-T2, ICT / ITE / Medical Power Supply/Class 2/Household Power Supply, Efficiency Level: USA DOE Level VI / Eco-design Directive 2009/125/EC, (EU) 2019/1782, Case Color/Style: GlobTek Black, Desktop/External, Regulated Switchmode AC-DC Power Supply AC Adaptor, Input Rating: 100-240V~, 50-60Hz, IEC 60320/C8 , Output Rating: 65W, 30.0V@2.16A, Output Configuration: 1500 mm, 18/2 Cond, Round Black, T-plug system (includes 5.5x2.5, 5.5x2.1, 3.5x1.3mm plugs in each kit), Ferrite: Core Size: 14.2*28.5*8.2, GlobTek Black, GT Cord # C22145, Pin Out: Polarity Configuration T00 All plugs are Medical Grade, Locking, Polarized once installed, and single use only. Product demonstration link: https://en.globtek.com/news/t00-changeable-output-plug-system-for-power-supplies MOLDED CONNECTORS AVAILABLE, Blades/Input Cord: (Order Separately), Approvals: Korea (41V-54V Only); EAC; CE; China RoHS; Double Insulation; cETLus 60601-1; FCC; PSE; PSE; PSE; Level VI; RoHS; Ukraine; VCCI; WEEE; CB 60601-1; IP41; S-Mark IEC/EN 60601-1; CB 62368; Taiwan BSMI; UKCA; ETL; Conforms to 62368-1; Morocco; Korea (9-15V Only); ETL 62368;

Model No. GTM96600-6530-T2

Part No./Ordering No. TR9KR2166T00CIMR6B | Rev C

3D File Download https://www.globtek.com/dl/GTM96600-T2.igs

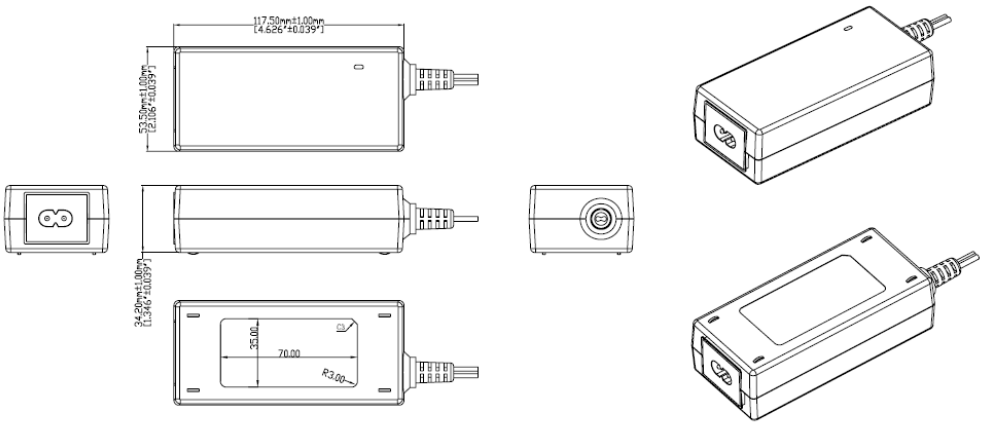


PROPRIETARY INFORMATION
PROPRIETARY OF GLOBTEK, INC. ANY REPRODUCTION, DISCLOSURE OR USE OF THIS DRAWING, IN WHOLE OR IN PART, IS HEREBY PROHIBITED EXCEPT AS SPECIFIED IN WRITING BY GLOBTEK, INC. © GlobTek, Inc. 2018 - 2022
guest /09/06/2022 8:31:00 PM CLONED FROM TR9CI2700ML4-N(RVB)

GlobTek, Inc.
www.globtek.com
186 Veterans Drive,
Northvale, NJ 07647
Tel. (201) 784-1000
Fax (201) 784-0111

Drawing Title: GTM96600-6530-T2, ICT / ITE / Medical Power Supply/Class 2/Household Power Supply, Efficiency Level: USA DOE Level VI / Eco-design Directive 2009/125/EC, (EU) 2019/1782, Case Color/Style: GlobTek Black, Desktop/External, Regulated Switchmode AC-DC Power Supply AC Adaptor, Input Rating: 100-240V~, 50-60Hz, IEC 60320/C8 , Output Rating: 65W, 30.0V@2.16A, Output Configuration: 1500 mm, 18/2 Cond, Round Black, T-plug system (includes 5.5x2.5, 5.5x2.1, 3.5x1.3mm plugs in each kit), Ferrite: Core Size: 14.2*28.5*8.2, GlobTek Black, GT Cord # C22145, Pin Out: Polarity Configuration T00 All plugs are Medical Grade, Locking, Polarized once installed, and single use only. Product demonstration link: https://en.globtek.com/news/t00-changeable-output-plug-system-for-power-supplies MOLDED CONNECTORS AVAILABLE, Blades/Input Cord: (Order Separately), Approvals: Korea (41V-54V Only); EAC; CE; China RoHS; Double Insulation; cETLus 60601-1; FCC; PSE; PSE; PSE; Level VI; RoHS; Ukraine; VCCI; WEEE; CB 60601-1; IP41; S-Mark IEC/EN 60601-1; CB 62368; Taiwan BSMI; UKCA; ETL; Conforms to 62368-1; Morocco; Korea (9-15V Only); ETL 62368;

Model No. GTM96600-6530-T2

Part No./Ordering No. TR9KR2166T00CIMR6B | Rev C

## DERATING CURVE

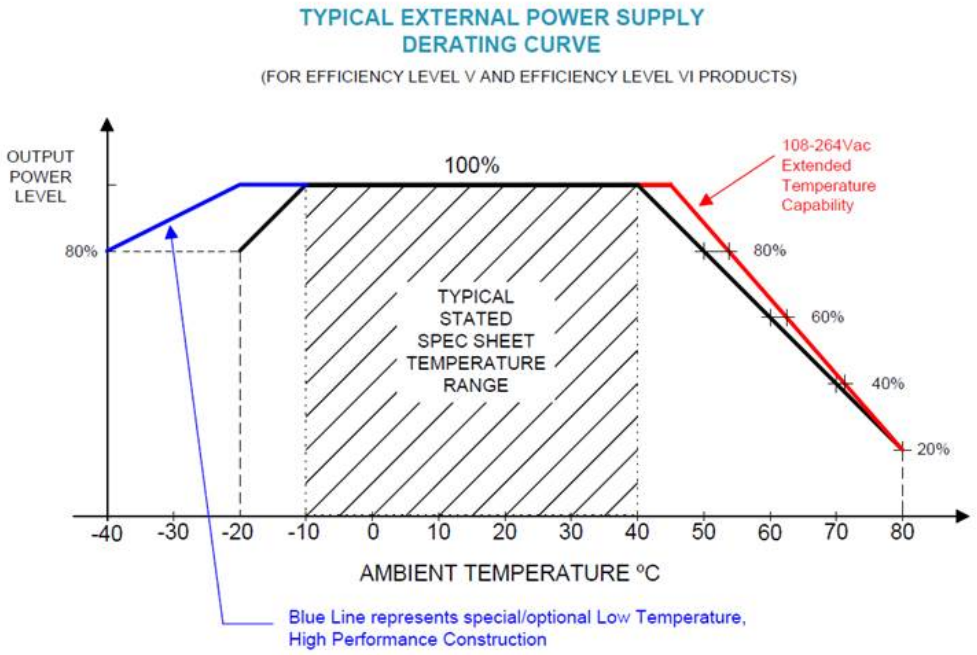


+74C operation with an output power of 19.2W; and cold start at -40C

PROPRIETARY INFORMATION
PROPRIETARY OF GLOBTEK, INC. ANY REPRODUCTION, DISCLOSURE OR USE OF THIS DRAWING, IN WHOLE OR IN PART, IS HEREBY PROHIBITED EXCEPT AS SPECIFIED IN WRITING BY GLOBTEK, INC. © GlobTek, Inc. 2018 - 2022
guest /09/06/2022 8:31:00 PM CLONED FROM TR9CI2700ML4-N(RVB)

GlobTek, Inc.
www.globtek.com
186 Veterans Drive,
Northvale, NJ 07647
Tel. (201) 784-1000
Fax (201) 784-0111

| | |
|---|---|
| Drawing Title: GTM96600-6530-T2, ICT / ITE / Medical Power Supply/Class 2/Household Power Supply, Efficiency Level: USA DOE Level VI / Eco-design Directive 2009/125/EC, (EU) 2019/1782, Case Color/Style: GlobTek Black, Desktop/External, Regulated Switchmode AC-DC Power Supply AC Adaptor, Input Rating: 100-240V~, 50-60Hz, IEC 60320/C8 , Output Rating: 65W, 30.0V@2.16A, Output Configuration: 1500 mm, 18/2 Cond, Round Black, T-plug system (includes 5.5x2.5, 5.5x2.1, 3.5x1.3mm plugs in each kit), Ferrite: Core Size: 14.2*28.5*8.2, GlobTek Black, GT Cord # C22145, Pin Out: Polarity Configuration T00 All plugs are Medical Grade, Locking, Polarized once installed, and single use only. Product demonstration link: https://en.globtek.com/news/t00-changeable-output-plug-system-for-power-supplies MOLDED CONNECTORS AVAILABLE, Blades/Input Cord: (Order Separately), Approvals: Korea (41V-54V Only); EAC; CE; China RoHS; Double Insulation; cETLus 60601-1; FCC; PSE; PSE; PSE; Level VI; RoHS; Ukraine; VCCI; WEEE; CB 60601-1; IP41; S-Mark IEC/EN 60601-1; CB 62368; Taiwan BSMI; UKCA; ETL; Conforms to 62368-1; Morocco; Korea (9-15V Only); ETL 62368; | |
| Model No. GTM96600-6530-T2 | |
| Part No./Ordering No. TR9KR2166T00CIMR6B | Rev C |

## INPUT CONFIGURATION

(F1) Class II / Double Insulated

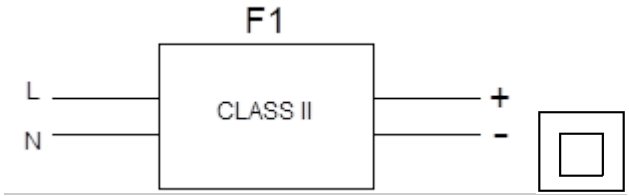


Alternate grounding configurations available upon request.

Blades/Cord Included:None:(Order Separately)

Blades/Cord Installed:None:(Order Separately)

IEC 60320/C8 AC Inlet connector, Class II, Non-Earth Ground (aka "Figure-8")

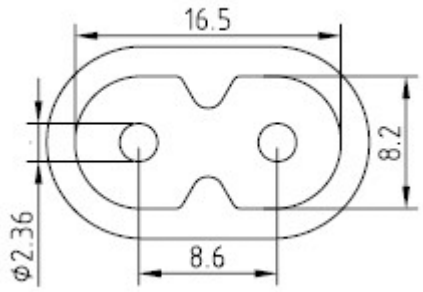


Mates with IEC 60320/C7 Plug

Below are standard cordsets which are "not included" (unless stated above); these may be purchased separately or packaged with the power supply. Please contact your Sales Engineer if the style required is not shown below. Many more available in different lengths, colors or cable material.

Standard International IEC 320/C7 Cordsets

| Part Number | Type | Standard | Connector | Length (mm) | Length (feet) |
|---|---|---|---|---|---|
| 2094112M703(R) | Argentina (Type I) | IRAM 2063 | IEC 320/C7 | 2000 | 7 |
| 5014112M703A(R) | Australian (Type I) | AS 3112 | IEC 320/C7 | 2000 | 7 |
| 207B4111M8703(R) | Brazil (Type N) | NBR14136 | IEC 320/C7 | 1800 | 6 |
| | | | IEC | | |

PROPRIETARY INFORMATION
PROPRIETARY OF GLOBTEK, INC. ANY REPRODUCTION, DISCLOSURE OR USE OF THIS DRAWING, IN WHOLE OR IN PART, IS HEREBY PROHIBITED EXCEPT AS SPECIFIED IN WRITING BY GLOBTEK, INC. © GlobTek, Inc. 2018 - 2022
guest /09/06/2022 8:31:00 PM CLONED FROM TR9CI2700ML4-N(RVB)

GlobTek, Inc.
www.globtek.com
186 Veterans Drive,
Northvale, NJ 07647
Tel. (201) 784-1000
Fax (201) 784-0111

Drawing Title: GTM96600-6530-T2, ICT / ITE / Medical Power Supply/Class 2/Household Power Supply, Efficiency Level: USA DOE Level VI / Eco-design Directive 2009/125/EC, (EU) 2019/1782, Case Color/Style: GlobTek Black, Desktop/External, Regulated Switchmode AC-DC Power Supply AC Adaptor, Input Rating: 100-240V~, 50-60Hz, IEC 60320/C8 , Output Rating: 65W, 30.0V@2.16A, Output Configuration: 1500 mm, 18/2 Cond, Round Black, T-plug system (includes 5.5x2.5, 5.5x2.1, 3.5x1.3mm plugs in each kit), Ferrite: Core Size: 14.2*28.5*8.2, GlobTek Black, GT Cord # C22145, Pin Out: Polarity Configuration T00 All plugs are Medical Grade, Locking, Polarized once installed, and single use only. Product demonstration link: https://en.globtek.com/news/t00-changeable-output-plug-system-for-power-supplies MOLDED CONNECTORS AVAILABLE, Blades/Input Cord: (Order Separately), Approvals: Korea (41V-54V Only); EAC; CE; China RoHS; Double Insulation; cETLus 60601-1; FCC; PSE; PSE; PSE; Level VI; RoHS; Ukraine; VCCI; WEEE; CB 60601-1; IP41; S-Mark IEC/EN 60601-1; CB 62368; Taiwan BSMI; UKCA; ETL; Conforms to 62368-1; Morocco; Korea (9-15V Only); ETL 62368;

Model No. GTM96600-6530-T2

Part No./Ordering No. TR9KR2166T00CIMR6B — Rev C

| | | | | | |
|---|---|---|---|---|---|
| 4533501M8703(R) | China (Type A) | GB 2099.1 | 320/C7 | 1830 | 6 |
| 2074112M703A(R) | European (Type C) | CEE 7/16 | IEC 320/C7 | 2000 | 7 |
| 2074112M703AEUSA(R) | European/South Africa Combo(Type C) | CEE 7/16 | IEC 320/C7 | 2000 | 7 |
| 2084111M8703B(R) | India (Type D) | IS 1293 | IEC 320/C7 | 1800 | 6 |
| 451J3401M8703(R) | Japan (Type A) | JIS 8303 | IEC 320/C7 | 1830 | 6 |
| 2044112M703A(R) | Korea (Type C) | KS C8305 | IEC 320/C7 | 2000 | 7 |
| 4511116F703A(R) | North America (Type A) | NEMA 1-15P | IEC 320/C7 | 1830 | 6 |
| 2084111M8703(R) | South Africa (Type M) | BS 546 | IEC320/C7 | 1830 | 6 |
| 4033401M8703A(R) | Taiwan (Type A) | CNS690 | IEC 320/C7 | 1830 | 6 |
| 6104112M703A(R) | UK, Hong Kong, Singapore, Gulf States (Type G) | BS1363 | IEC 320/C7 | 2000 | 7 |
| 451G1116F703A(R) | Gulf States (Kuwait, Bahrain, Oman, Qatar, Saudi Arabia, Yemen and the United Arab Emirates (UAE)(Type A) | Nema 1-15P | IEC320/C7 | 1830 | 6 |
| 6303742M5703(R) | Thailand (Type C) | TIS 166-2549 | IEC320/C7 | 2500 | 8 |

PROPRIETARY INFORMATION
PROPRIETARY OF GLOBTEK, INC. ANY REPRODUCTION, DISCLOSURE OR USE OF THIS DRAWING, IN WHOLE OR IN PART, IS HEREBY PROHIBITED EXCEPT AS SPECIFIED IN WRITING BY GLOBTEK, INC. © GlobTek, Inc. 2018 - 2022
guest /09/06/2022 8:31:00 PM CLONED FROM TR9CI2700ML4-N(RVB)

GlobTek, Inc.
www.globtek.com
186 Veterans Drive,
Northvale, NJ 07647
Tel. (201) 784-1000
Fax (201) 784-0111

Drawing Title: GTM96600-6530-T2, ICT / ITE / Medical Power Supply/Class 2/Household Power Supply, Efficiency Level: USA DOE Level VI / Eco-design Directive 2009/125/EC, (EU) 2019/1782, Case Color/Style: GlobTek Black, Desktop/External, Regulated Switchmode AC-DC Power Supply AC Adaptor, Input Rating: 100-240V~, 50-60Hz, IEC 60320/C8 , Output Rating: 65W, 30.0V@2.16A, Output Configuration: 1500 mm, 18/2 Cond, Round Black, T-plug system (includes 5.5x2.5, 5.5x2.1, 3.5x1.3mm plugs in each kit), Ferrite: Core Size: 14.2*28.5*8.2, GlobTek Black, GT Cord # C22145, Pin Out: Polarity Configuration T00 All plugs are Medical Grade, Locking, Polarized once installed, and single use only. Product demonstration link: https://en.globtek.com/news/t00-changeable-output-plug-system-for-power-supplies MOLDED CONNECTORS AVAILABLE, Blades/Input Cord: (Order Separately), Approvals: Korea (41V-54V Only); EAC; CE; China RoHS; Double Insulation; cETLus 60601-1; FCC; PSE; PSE; PSE; Level VI; RoHS; Ukraine; VCCI; WEEE; CB 60601-1; IP41; S-Mark IEC/EN 60601-1; CB 62368; Taiwan BSMI; UKCA; ETL; Conforms to 62368-1; Morocco; Korea (9-15V Only); ETL 62368;

Model No. GTM96600-6530-T2

Part No./Ordering No. TR9KR2166T00CIMR6B | Rev C

## OUTPUT CORD AND CONNECTOR: T00/C22145

ACTUAL CONNECTORS, OVERMOLDS, FERRITES MAY VARY SLIGHTLY FROM THE PICTURE BELOW

| | |
|---|---|
| CABLE TYPE | Round Black |
| CABLE LENGTH (mm) | 1500 |
| CABLE TOLERANCE (mm) | ± 50 |
| WIRE GAUGE (AWG) | 18 |
| CONDUCTORS | 2 |
| HANK DIMENSION (mm) | 80 ± 10 |
| CABLE / CONNECTOR OVERMOLD COLOR | GlobTek Black |
| FERRITE TYPE / DIMENSION | Core Size: 14.2*28.5*8.2 |
| FERRITE # OF TURNS(Definition) | 2 Pass thru core (1 turns) |
| FERRITE DIMENSION FROM STRAIN RELIEF | 50±10 |
| FERRITE DIMENSION FROM PLUG | N/A |
| PLUG TYPE | T-plug system (includes 5.5x2.5, 5.5x2.1, 3.5x1.3mm plugs in each kit) |
| OUTPUT CONNECTOR GENDER | not applicable |
| OVERMOLDED | Yes |
| OVER MOLD ORIENTATION | Straight |
| CONNECTOR PIN OUT: | Polarity Configuration T00 All plugs are Medical Grade, Locking, Polarized once installed, and single use only. Product demonstration link: https://en.globtek.com/news/t00-changeable-output-plug-system-for-power-supplies MOLDED CONNECTORS AVAILABLE |
| ADDITIONAL REQUIREMENTS | |

This novel system allows for rapid shipment of prototype samples or small quantities of common output voltage and current which can fullfill the needs of most common barrel plug specs. The table below explains the standard and non standard options available as part of this system. This system also allows for both Center Positive and Center Negative polarity.

The T00 plug and adapters are Medical Grade, single use only, Polarized after installation, and not removable without use of special tool.

Any of the below options, and more, are available as molded plugs from stock or special order. Please contact GlobTek for more information

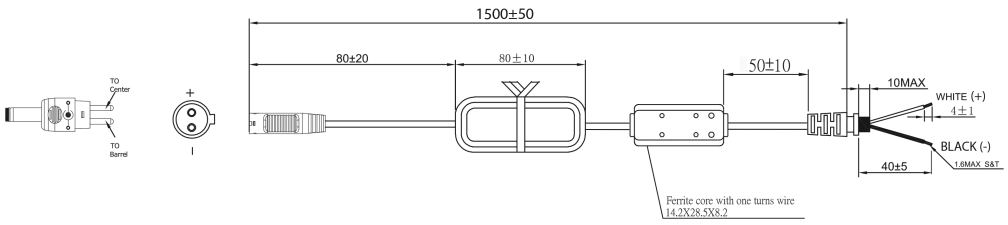


Cable OD 4.8 ± 0.15 mm

Individual conductor (Black & White) OD value of this 18 AWG cable is 2.0 ± 0.1 mm

PROPRIETARY INFORMATION
PROPRIETARY OF GLOBTEK, INC. ANY REPRODUCTION, DISCLOSURE OR USE OF THIS DRAWING, IN WHOLE OR IN PART, IS HEREBY PROHIBITED EXCEPT AS SPECIFIED IN WRITING BY GLOBTEK, INC. © GlobTek, Inc. 2018 - 2022
guest /09/06/2022 8:31:00 PM CLONED FROM TR9CI2700ML4-N(RVB)

GlobTek, Inc.
www.globtek.com
186 Veterans Drive,
Northvale, NJ 07647
Tel. (201) 784-1000
Fax (201) 784-0111

| | |
|---|---|
| Drawing Title: GTM96600-6530-T2, ICT / ITE / Medical Power Supply/Class 2/Household Power Supply, Efficiency Level: USA DOE Level VI / Eco-design Directive 2009/125/EC, (EU) 2019/1782, Case Color/Style: GlobTek Black, Desktop/External, Regulated Switchmode AC-DC Power Supply AC Adaptor, Input Rating: 100-240V~, 50-60Hz, IEC 60320/C8 , Output Rating: 65W, 30.0V@2.16A, Output Configuration: 1500 mm, 18/2 Cond, Round Black, T-plug system (includes 5.5x2.5, 5.5x2.1, 3.5x1.3mm plugs in each kit), Ferrite: Core Size: 14.2*28.5*8.2, GlobTek Black, GT Cord # C22145, Pin Out: Polarity Configuration T00 All plugs are Medical Grade, Locking, Polarized once installed, and single use only. Product demonstration link: https://en.globtek.com/news/t00-changeable-output-plug-system-for-power-supplies MOLDED CONNECTORS AVAILABLE, Blades/Input Cord: (Order Separately), Approvals: Korea (41V-54V Only); EAC; CE; China RoHS; Double Insulation; cETLus 60601-1; FCC; PSE; PSE; PSE; Level VI; RoHS; Ukraine; VCCI; WEEE; CB 60601-1; IP41; S-Mark IEC/EN 60601-1; CB 62368; Taiwan BSMI; UKCA; ETL; Conforms to 62368-1; Morocco; Korea (9-15V Only); ETL 62368; | |
| Model No. GTM96600-6530-T2 | |
| Part No./Ordering No. TR9KR2166T00CIMR6B | Rev C |

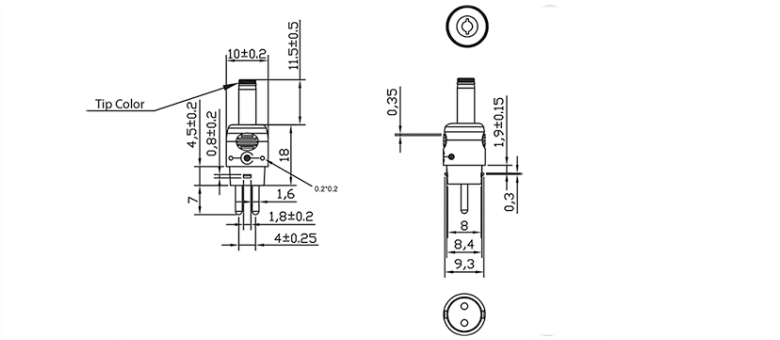


Option upon request: STRAIGHT Female Barrels are available for special order in any length between 9mm-14mm

This novel system allows for rapid shipment of prototype samples or small quantities of common output voltage and current which can fulfill the needs of most common barrel plug as well as male plug specs. The table explains the standard and non-standard options available as part of this system. This system also allows for both Center Positive and Center Negative
polarity.

The T00 plug and adapters are Medical Grade, single use only, Polarized after installation, and not removable without use of special tool.

Please click here and review usage guidance below before use.

Any of the below options, and more, are available as molded plugs from stock or special order. Please contact GlobTek for more information

---

ADDITIONAL OUTPUT PLUG OPTIONS ARE AVAILABLE AT https://www.globtek.com/connectors/
STANDARD PLUGS AND CONNECTORS CAN BE SEEN ONLINE AT https://www.globtek.com/connectors/
CALCULATE VOLTAGE REGULATION/DROP WITH OUR ONLINE CALCULATOR: https://en.globtek.com/output-cable-regulation-calculator/

PROPRIETARY INFORMATION
PROPRIETARY OF GLOBTEK, INC. ANY REPRODUCTION, DISCLOSURE OR USE OF THIS DRAWING, IN WHOLE OR IN PART, IS HEREBY PROHIBITED EXCEPT AS SPECIFIED IN WRITING BY GLOBTEK, INC. © GlobTek, Inc. 2018 - 2022
guest /09/06/2022 8:31:00 PM CLONED FROM TR9CI2700ML4-N(RVB)

GlobTek, Inc.
www.globtek.com
186 Veterans Drive,
Northvale, NJ 07647
Tel. (201) 784-1000
Fax (201) 784-0111

| | |
|---|---|
| Drawing Title: GTM96600-6530-T2, ICT / ITE / Medical Power Supply/Class 2/Household Power Supply, Efficiency Level: USA DOE Level VI / Eco-design Directive 2009/125/EC, (EU) 2019/1782, Case Color/Style: GlobTek Black, Desktop/External, Regulated Switchmode AC-DC Power Supply AC Adaptor, Input Rating: 100-240V~, 50-60Hz, IEC 60320/C8 , Output Rating: 65W, 30.0V@2.16A, Output Configuration: 1500 mm, 18/2 Cond, Round Black, T-plug system (includes 5.5x2.5, 5.5x2.1, 3.5x1.3mm plugs in each kit), Ferrite: Core Size: 14.2*28.5*8.2, GlobTek Black, GT Cord # C22145, Pin Out: Polarity Configuration T00 All plugs are Medical Grade, Locking, Polarized once installed, and single use only. Product demonstration link: https://en.globtek.com/news/t00-changeable-output-plug-system-for-power-supplies MOLDED CONNECTORS AVAILABLE, Blades/Input Cord: (Order Separately), Approvals: Korea (41V-54V Only); EAC; CE; China RoHS; Double Insulation; cETLus 60601-1; FCC; PSE; PSE; PSE; Level VI; RoHS; Ukraine; VCCI; WEEE; CB 60601-1; IP41; S-Mark IEC/EN 60601-1; CB 62368; Taiwan BSMI; UKCA; ETL; Conforms to 62368-1; Morocco; Korea (9-15V Only); ETL 62368; | |
| Model No. GTM96600-6530-T2 | |
| Part No./Ordering No. TR9KR2166T00CIMR6B | Rev C |

## OUTPUT CONNECTOR HOOK UP

TO ADDRESS SYSTEM-LEVEL EMI CONCERNS, FERRITE CHOKES/BEADS MAY BE ADDED/REVISED UPON REQUEST. A SAMPLE KIT OF GLOBTEK'S STANDARD FERRITES IS AVAILABLE UNDER GLOBTEK P/N: EMI-MITIGATION-KIT1

FOR ADDITIONAL INFORMATION, PLEASE READ OUR WHITE PAPER AT:
https://en.globtek.com/technical-articles/ferrite-kit-radiated-emi-suppression-kit-for-globtek-power-supplies-cable-assemblies

PROPRIETARY INFORMATION
PROPRIETARY OF GLOBTEK, INC. ANY REPRODUCTION, DISCLOSURE OR USE OF THIS DRAWING, IN WHOLE OR IN PART, IS HEREBY PROHIBITED EXCEPT AS SPECIFIED IN WRITING BY GLOBTEK, INC. © GlobTek, Inc. 2018 - 2022
guest /09/06/2022 8:31:00 PM CLONED FROM TR9CI2700ML4-N(RVB)

GlobTek, Inc.
www.globtek.com
186 Veterans Drive,
Northvale, NJ 07647
Tel. (201) 784-1000
Fax (201) 784-0111

| | |
|---|---|
| Drawing Title: GTM96600-6530-T2, ICT / ITE / Medical Power Supply/Class 2/Household Power Supply, Efficiency Level: USA DOE Level VI / Eco-design Directive 2009/125/EC, (EU) 2019/1782, Case Color/Style: GlobTek Black, Desktop/External, Regulated Switchmode AC-DC Power Supply AC Adaptor, Input Rating: 100-240V~, 50-60Hz, IEC 60320/C8 , Output Rating: 65W, 30.0V@2.16A, Output Configuration: 1500 mm, 18/2 Cond, Round Black, T-plug system (includes 5.5x2.5, 5.5x2.1, 3.5x1.3mm plugs in each kit), Ferrite: Core Size: 14.2*28.5*8.2, GlobTek Black, GT Cord # C22145, Pin Out: Polarity Configuration T00 All plugs are Medical Grade, Locking, Polarized once installed, and single use only. Product demonstration link: https://en.globtek.com/news/t00-changeable-output-plug-system-for-power-supplies MOLDED CONNECTORS AVAILABLE, Blades/Input Cord: (Order Separately), Approvals: Korea (41V-54V Only); EAC; CE; China RoHS; Double Insulation; cETLus 60601-1; FCC; PSE; PSE; PSE; Level VI; RoHS; Ukraine; VCCI; WEEE; CB 60601-1; IP41; S-Mark IEC/EN 60601-1; CB 62368; Taiwan BSMI; UKCA; ETL; Conforms to 62368-1; Morocco; Korea (9-15V Only); ETL 62368; | |
| Model No. GTM96600-6530-T2 | |
| Part No./Ordering No. TR9KR2166T00CIMR6B | Rev C |

## LABEL:L-1186

| | |
|---|---|
| LABEL P/N: | Standard GT |
| MATERIAL: | Flat Thermal Transfer, Imprintable, Polyester Label and/or Pad Printed and/or Molded, and/or Laser Engraved in the case |
| BACKGROUND COLOR: | Black if housing is Black, White or Silver if housing is White or Gray. |
| TEXT COLOR: | White or Silver if label is Black Background for Black housing. Black if label is White or Silver background and Housing is White or Gray. |
| LABEL WIDTH (mm): | 35.0 |
| LABEL HEIGHT (mm): | 70.0 |
| SPECIAL BARCODE LABEL MATERIAL: | No |

Below is the minimum information which will appear on the label. NOTE: in the logo area additional/actual positioning of symbols and text is subjected to change as per agency updates/requirements or additional model approvals become available.
Regulatory certifications/label markings may be in logo area on the label or molded into the case housing outside the label area.
Information will be shown via label and/or pad printed and/or molded and/or laser engraved in the case. * Date code markings at GlobTek option
.

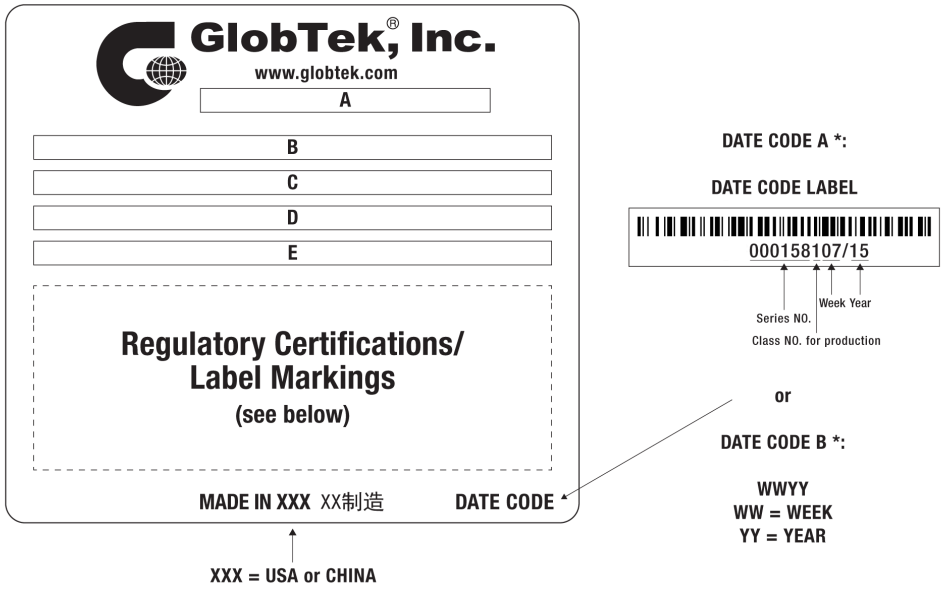


A=ICT / ITE / Medical Power Supply/Class 2/Household Power Supply
B=P/N: (料号) TR9KR2166T00CIMR6B
C=Model (型号) GTM96600-6530-T2
D=Input (输入)100-240V~, 50-60Hz, 1.5A
E=Output (输出)30.0 V ⎓ 2.16 A, 65.0W

PROPRIETARY INFORMATION
PROPRIETARY OF GLOBTEK, INC. ANY REPRODUCTION, DISCLOSURE OR USE OF THIS DRAWING, IN WHOLE OR IN PART, IS HEREBY PROHIBITED EXCEPT AS SPECIFIED IN WRITING BY GLOBTEK, INC. © GlobTek, Inc. 2018 - 2022
guest /09/06/2022 8:31:00 PM CLONED FROM TR9CI2700ML4-N(RVB)

GlobTek, Inc.
www.globtek.com
186 Veterans Drive,
Northvale, NJ 07647
Tel. (201) 784-1000
Fax (201) 784-0111

| | |
|---|---|
| Drawing Title: GTM96600-6530-T2, ICT / ITE / Medical Power Supply/Class 2/Household Power Supply, Efficiency Level: USA DOE Level VI / Eco-design Directive 2009/125/EC, (EU) 2019/1782, Case Color/Style: GlobTek Black, Desktop/External, Regulated Switchmode AC-DC Power Supply AC Adaptor, Input Rating: 100-240V~, 50-60Hz, IEC 60320/C8 , Output Rating: 65W, 30.0V@2.16A, Output Configuration: 1500 mm, 18/2 Cond, Round Black, T-plug system (includes 5.5x2.5, 5.5x2.1, 3.5x1.3mm plugs in each kit), Ferrite: Core Size: 14.2*28.5*8.2, GlobTek Black, GT Cord # C22145, Pin Out: Polarity Configuration T00 All plugs are Medical Grade, Locking, Polarized once installed, and single use only. Product demonstration link: https://en.globtek.com/news/t00-changeable-output-plug-system-for-power-supplies MOLDED CONNECTORS AVAILABLE, Blades/Input Cord: (Order Separately), Approvals: Korea (41V-54V Only); EAC; CE; China RoHS; Double Insulation; cETLus 60601-1; FCC; PSE; PSE; PSE; Level VI; RoHS; Ukraine; VCCI; WEEE; CB 60601-1; IP41; S-Mark IEC/EN 60601-1; CB 62368; Taiwan BSMI; UKCA; ETL; Conforms to 62368-1; Morocco; Korea (9-15V Only); ETL 62368; | |
| Model No. GTM96600-6530-T2 | |
| Part No./Ordering No. TR9KR2166T00CIMR6B | Rev C |

| | |
|---|---|
| AGENCY ONLINE DOCUMENTS | http://www.globtek.info/certs/GTM96600-TZ/ |
| CE EC-Declaration for Medical | http://globtek.force.com/models/ec_declaration_product?id=01t0c000008OxoG&m=1 |
| CE EC-Declaration for Industrial/Commercial/ITE | http://globtek.force.com/models/ec_declaration_product?id=01t0c000008OxoG&i=2 |
| CE EC-Declaration for Household | Contact GlobTek for more information |
| UKCA-Declaration for Medical | http://globtek.force.com/models/ukca_declaration_product?id=01t0c000008OxoG&m=1 |
| UKCA-Declaration for Industrial/Commercial/ITE | http://globtek.force.com/models/ukca_declaration_product?id=01t0c000008OxoG&i=2 |
| UKCA-Declaration for Household | Contact GlobTek for more information |
| Morocco SDoC Declaration | https://globtek.secure.force.com/models/Morocco_SDoC_Declaration?id=a0O0c00000PGmJKEA1 |
| RoHS/RoHS3 Declaration | https://www.globtek.com/pdf/rohs_cert/01t0c000008OxoGAAS |
| REACH Declaration | https://www.globtek.com/pdf/iso_certificates/REACH.pdf |
| Conflict Minerals Declaration | https://www.globtek.com/pdf/conflict-minerals.pdf |
| Prop 65 Statement | https://en.globtek.com/prop-65-statement.pdf |

IPXY rating is based on 3rd party testing and customers should check suitability and test system level IPXY rating before ordering.

## Regulatory Certifications/Label Markings

Below follows a link to the latest regulatory certifications and marks for this specific product. National standards as well as certification schemes are constantly changing and so is the set of certification marks and symbols applicable to this product. Various standards, marks and symbols, and certificates are subject to change at any time without notice.

Additional standards or unique country certifications are available upon request. Please contact Globtek to request a quotation.

| | |
|---|---|
| LATEST PRODUCT/MODEL CERTIFICATIONS: | https://www.globtek.com/datasheet/w70324 |
| AGENCY ONLINE DOCUMENTS: | http://www.globtek.info/certs/GTM96600-TZ/ |



(F1) Class II / Double Insulated




Polarity Configuration T00 All plugs are Medical Grade, Locking, Polarized once installed, and single use only.
Product demonstration link: https://en.globtek.com/news/t00-changeable-output-plug-system-for-power-supplies
MOLDED CONNECTORS AVAILABLE

PROPRIETARY INFORMATION
PROPRIETARY OF GLOBTEK, INC. ANY REPRODUCTION, DISCLOSURE OR USE OF THIS DRAWING, IN WHOLE OR IN PART, IS HEREBY PROHIBITED EXCEPT AS SPECIFIED IN WRITING BY GLOBTEK, INC. © GlobTek, Inc. 2018 - 2022
guest /09/06/2022 8:31:00 PM CLONED FROM TR9CI2700ML4-N(RVB)

GlobTek, Inc.
www.globtek.com
186 Veterans Drive,
Northvale, NJ 07647
Tel. (201) 784-1000
Fax (201) 784-0111

| | |
|---|---|
| Drawing Title: GTM96600-6530-T2, ICT / ITE / Medical Power Supply/Class 2/Household Power Supply, Efficiency Level: USA DOE Level VI / Eco-design Directive 2009/125/EC, (EU) 2019/1782, Case Color/Style: GlobTek Black, Desktop/External, Regulated Switchmode AC-DC Power Supply AC Adaptor, Input Rating: 100-240V~, 50-60Hz, IEC 60320/C8 , Output Rating: 65W, 30.0V@2.16A, Output Configuration: 1500 mm, 18/2 Cond, Round Black, T-plug system (includes 5.5x2.5, 5.5x2.1, 3.5x1.3mm plugs in each kit), Ferrite: Core Size: 14.2*28.5*8.2, GlobTek Black, GT Cord # C22145, Pin Out: Polarity Configuration T00 All plugs are Medical Grade, Locking, Polarized once installed, and single use only. Product demonstration link: https://en.globtek.com/news/t00-changeable-output-plug-system-for-power-supplies MOLDED CONNECTORS AVAILABLE, Blades/Input Cord: (Order Separately), Approvals: Korea (41V-54V Only); EAC; CE; China RoHS; Double Insulation; cETLus 60601-1; FCC; PSE; PSE; PSE; Level VI; RoHS; Ukraine; VCCI; WEEE; CB 60601-1; IP41; S-Mark IEC/EN 60601-1; CB 62368; Taiwan BSMI; UKCA; ETL; Conforms to 62368-1; Morocco; Korea (9-15V Only); ETL 62368; | |
| Model No. GTM96600-6530-T2 | |
| Part No./Ordering No. TR9KR2166T00CIMR6B | Rev C |

## PACKAGING

| | |
|---|---|
| Packing Spec P/N: | Packing for DT plug model with T00 plug and manual |
| Box Qty: | 30 |
| Gift Box Size (mm): | 142*115*60 |
| Gift Box Color: | White |
| Master Carton Size (mm): | 442 x 330 x 275 |
| Master Carton Cubic Volume ($m^3$): | 0.04 |
| Master GW (Kg): | 15.6 kg |
| BLADES INCLUDED: | None: (Order Separately) |
| BLADE/CORD INSTALLED: | None: (Order Separately) |
| USER MANUAL*: | 809-DESKTOPUSERMANUAL on A4 paper |
| USER MANUAL WEB LINK: | https://en.globtek.com/pdf/809-DESKTOPUSERMANUAL.jpg |

* This specification sheet is considered the user manual for all applications. It is expected that the buyer of this product will use it to formulate their own user manual for their end product and a user manual specifically for the power adapter is not usually required. If a user manual is not specifically listed above then none will be provided with this unit.

If specific packaging is required, this section must specify all requirements and note “no exceptions”. If this section does not specify packaging, it is subject to change without notice at GlobTek’s discretion

PROPRIETARY INFORMATION
PROPRIETARY OF GLOBTEK, INC. ANY REPRODUCTION, DISCLOSURE OR USE OF THIS DRAWING, IN WHOLE OR IN PART, IS HEREBY PROHIBITED EXCEPT AS SPECIFIED IN WRITING BY GLOBTEK, INC. © GlobTek, Inc. 2018 - 2022
guest /09/06/2022 8:31:00 PM CLONED FROM TR9CI2700ML4-N(RVB)

GlobTek, Inc.
www.globtek.com
186 Veterans Drive,
Northvale, NJ 07647
Tel. (201) 784-1000
Fax (201) 784-0111

Drawing Title: GTM96600-6530-T2, ICT / ITE / Medical Power Supply/Class 2/Household Power Supply, Efficiency Level: USA DOE Level VI / Eco-design Directive 2009/125/EC, (EU) 2019/1782, Case Color/Style: GlobTek Black, Desktop/External, Regulated Switchmode AC-DC Power Supply AC Adaptor, Input Rating: 100-240V~, 50-60Hz, IEC 60320/C8 , Output Rating: 65W, 30.0V@2.16A, Output Configuration: 1500 mm, 18/2 Cond, Round Black, T-plug system (includes 5.5x2.5, 5.5x2.1, 3.5x1.3mm plugs in each kit), Ferrite: Core Size: 14.2*28.5*8.2, GlobTek Black, GT Cord # C22145, Pin Out: Polarity Configuration T00 All plugs are Medical Grade, Locking, Polarized once installed, and single use only. Product demonstration link: https://en.globtek.com/news/t00-changeable-output-plug-system-for-power-supplies MOLDED CONNECTORS AVAILABLE, Blades/Input Cord: (Order Separately), Approvals: Korea (41V-54V Only); EAC; CE; China RoHS; Double Insulation; cETLus 60601-1; FCC; PSE; PSE; PSE; Level VI; RoHS; Ukraine; VCCI; WEEE; CB 60601-1; IP41; S-Mark IEC/EN 60601-1; CB 62368; Taiwan BSMI; UKCA; ETL; Conforms to 62368-1; Morocco; Korea (9-15V Only); ETL 62368;

Model No. GTM96600-6530-T2

Part No./Ordering No. TR9KR2166T00CIMR6B | Rev C

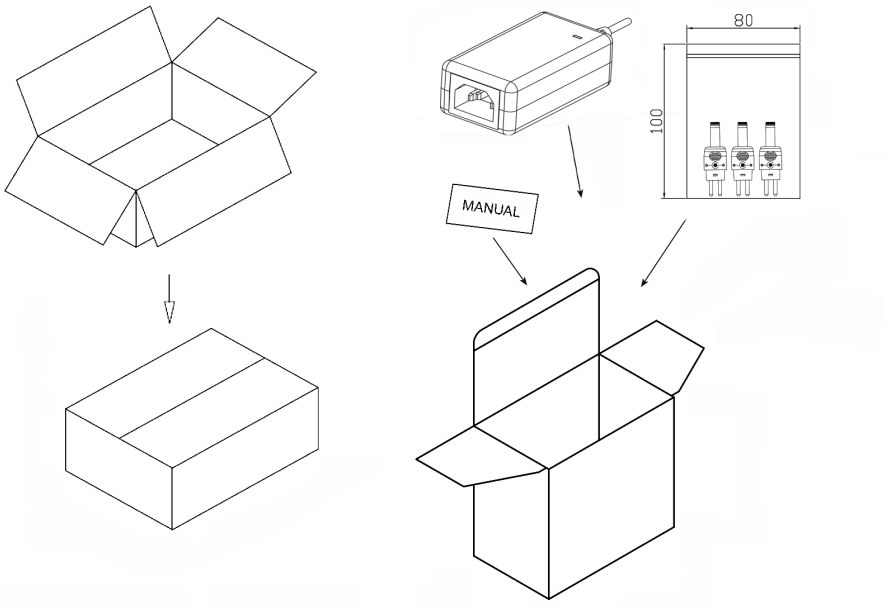


Manual for T00-plug:

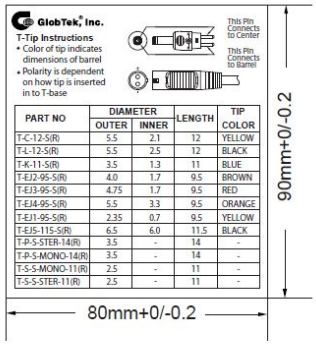


| PART NO | DIAMETER OUTER | DIAMETER INNER | LENGTH | TIP COLOR |
|---|---|---|---|---|
| T-C-12-S(R) | 5.5 | 2.1 | 12 | YELLOW |
| T-L-12-S(R) | 5.5 | 2.5 | 12 | BLACK |
| T-K-11-S(R) | 3.5 | 1.3 | 11 | BLUE |
| T-EJ2-9S-S(R) | 4.0 | 1.7 | 9.5 | BROWN |
| T-EJ3-9S-S(R) | 4.75 | 1.7 | 9.5 | RED |
| T-EJ4-9S-S(R) | 5.5 | 3.3 | 9.5 | ORANGE |
| T-EJ1-9S-S(R) | 2.35 | 0.7 | 9.5 | YELLOW |
| T-EJ5-11S-S(R) | 6.5 | 6.0 | 11.5 | BLACK |
| T-P-S-STER-14(R) | 3.5 | - | 14 | - |
| T-P-S-MONO-14(R) | 3.5 | - | 14 | - |
| T-S-S-MONO-11(R) | 2.5 | - | 11 | - |
| T-S-S-STER-11(R) | 2.5 | - | 11 | - |

正面/SHEET A

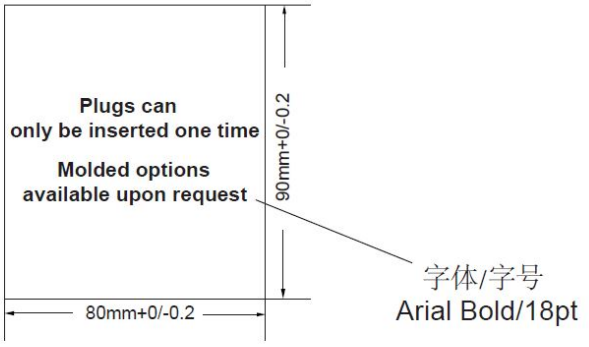


反面/SHEET B

PROPRIETARY INFORMATION
PROPRIETARY OF GLOBTEK, INC. ANY REPRODUCTION, DISCLOSURE OR USE OF THIS DRAWING, IN WHOLE OR IN PART, IS HEREBY PROHIBITED EXCEPT AS SPECIFIED IN WRITING BY GLOBTEK, INC. © GlobTek, Inc. 2018 - 2022
guest /09/06/2022 8:31:00 PM CLONED FROM TR9CI2700ML4-N(RVB)

GlobTek, Inc.
www.globtek.com
186 Veterans Drive,
Northvale, NJ 07647
Tel. (201) 784-1000
Fax (201) 784-0111

| | |
|---|---|
| Drawing Title: GTM96600-6530-T2, ICT / ITE / Medical Power Supply/Class 2/Household Power Supply, Efficiency Level: USA DOE Level VI / Eco-design Directive 2009/125/EC, (EU) 2019/1782, Case Color/Style: GlobTek Black, Desktop/External, Regulated Switchmode AC-DC Power Supply AC Adaptor, Input Rating: 100-240V~, 50-60Hz, IEC 60320/C8 , Output Rating: 65W, 30.0V@2.16A, Output Configuration: 1500 mm, 18/2 Cond, Round Black, T-plug system (includes 5.5x2.5, 5.5x2.1, 3.5x1.3mm plugs in each kit), Ferrite: Core Size: 14.2*28.5*8.2, GlobTek Black, GT Cord # C22145, Pin Out: Polarity Configuration T00 All plugs are Medical Grade, Locking, Polarized once installed, and single use only. Product demonstration link: https://en.globtek.com/news/t00-changeable-output-plug-system-for-power-supplies MOLDED CONNECTORS AVAILABLE, Blades/Input Cord: (Order Separately), Approvals: Korea (41V-54V Only); EAC; CE; China RoHS; Double Insulation; cETLus 60601-1; FCC; PSE; PSE; PSE; Level VI; RoHS; Ukraine; VCCI; WEEE; CB 60601-1; IP41; S-Mark IEC/EN 60601-1; CB 62368; Taiwan BSMI; UKCA; ETL; Conforms to 62368-1; Morocco; Korea (9-15V Only); ETL 62368; | |
| Model No. GTM96600-6530-T2 | |
| Part No./Ordering No. TR9KR2166T00CIMR6B | Rev C |

## INSTRUCTIONS TO THE OEM SYSTEMS ENGINEER

It is the responsibility of the OEM systems engineer to provide the end system user instructions and warnings for the use of this product in the end system.

If an input cord is required for this product, AC Mains voltage should be provided to the power supply by a power supply cord approved to the national standards of the country in which it will be used.

This product is not designed to be repaired. No serviceable parts inside. A blown internal fuse is an indication of catastrophic failure of circuit component(s). If a Failure Analysis is required for a failed power supply/battery charger, please return the damaged unit to GlobTek for an accurate determination of the root cause of the failure.

EMC Compliance of the complete OEM product, including the GlobTek power supply/battery charger needs to be verified by the OEM systems engineer.

## INSTRUCTION SHEET

N/A

PROPRIETARY INFORMATION
PROPRIETARY OF GLOBTEK, INC. ANY REPRODUCTION, DISCLOSURE OR USE OF THIS DRAWING, IN WHOLE OR IN PART, IS HEREBY PROHIBITED EXCEPT AS SPECIFIED IN WRITING BY GLOBTEK, INC. © GlobTek, Inc. 2018 - 2022
guest /09/06/2022 8:31:00 PM CLONED FROM TR9CI2700ML4-N(RVB)