MICRO SWITCH
a Honeywell Division
FED. MFG. CODE 91929

# SWITCH - TOGGLE ABOVE PANEL MOUNT

CATALOG LISTING
2TP7-70

THIS DRAWING COVERS A PROPRIETARY ITEM AND IS THE PROPERTY OF MICRO SWITCH. A DIVISION OF HONEYWELL. THIS DRAWING IS NOT TO BE COPIED OR USED WITHOUT THE APPROVAL OF MICRO SWITCH

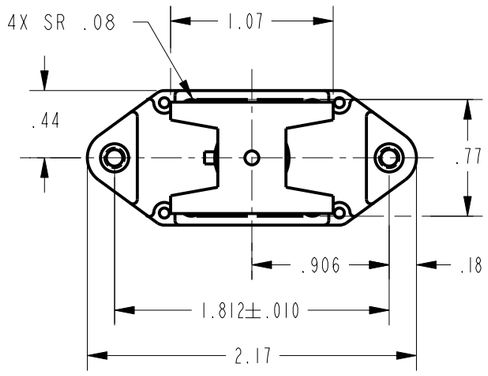


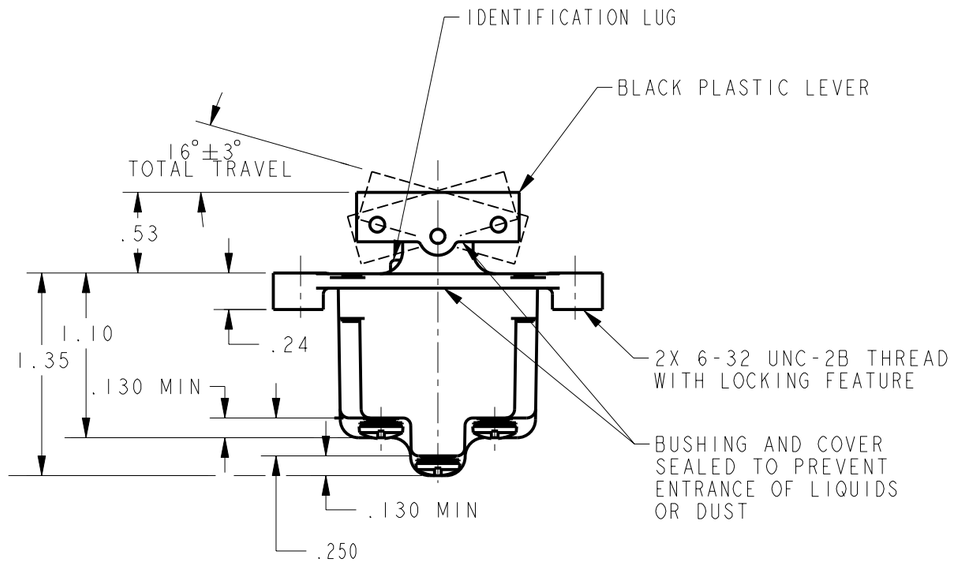


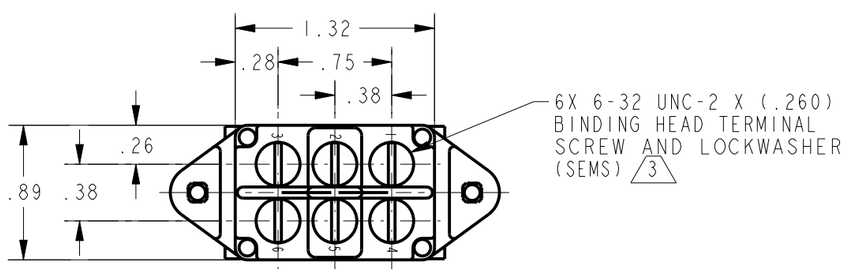


## CIRCUIT DIAGRAM

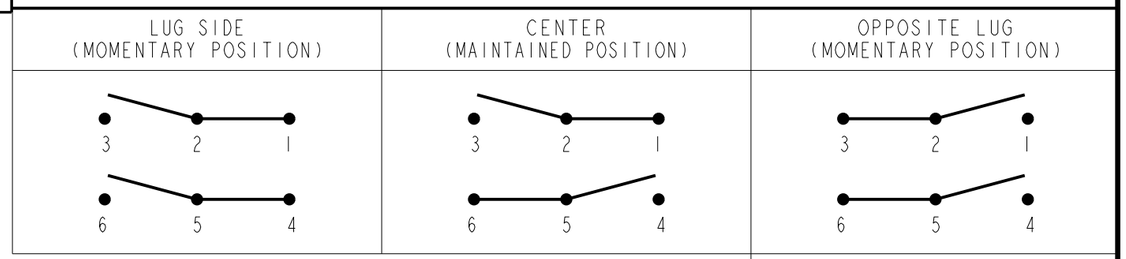


### ELECTRICAL DATA

L192
10A 125, 250, 277 VAC
1/4HP 125 VAC,
1/2HP 250, 277 VAC
3A 125 VAC "L"

NOTES
1 - SWITCH WILL WITHSTAND TEMPERATURE OF 160°F CONTINUOUSLY AT FULL RATED LOAD
2 - MICRO SWITCH CATALOG LISTING MARKED ON SIDE OF SWITCH
3 SCREWS FURNISHED UNASSEMBLED

### ELECTRICAL DATA

MILITARY RATING (AMPS)

| RESISTIVE LOAD DC VOLTS | | | RESISTIVE LOAD AC VOLTS | | LAMP LOAD | | INDUCTIVE LOAD | |
|---|---|---|---|---|---|---|---|---|
| 28 | 125 | 250 | 125 | 250 | 28 VDC | 125 VAC | 28 VDC | 125 VAC |
| 18 | .75 | .5 | 11 | 6 | 5 | 2 | 10 | 8 |

THIRD ANGLE PROJECTION

SCALE FULL

DO NOT SCALE PRINT

UNLESS OTHERWISE SPECIFIED TOLERANCES ARE

| | | |
|---|---|---|
| ONE PLACE | (.0) | ±.030 |
| TWO PLACE | (.00) | ±.015 |
| THREE PLACE | (.000) | ±.005 |
| ANGLES | | ± |

WEIGHT .14 LB EST

ANSI Y14.5M-1982 APPLIES

CATALOG LISTING 2TP7-70
PAGE 1 OF 1
RELEASE NO. PR-19477
REPLACES
ISSUE 3
REVISIONS
A C094415
TSM 24NOV99
CHECK
CHECK 24NOV99
CHECK SAV
CHECK 24NOV99
DRAWN TSM 24NOV99
PTC/CAD 2D