CUI INC
a bel group

SERIES: PESE2-M | DESCRIPTION: DC-DC CONVERTER

FEATURES

- 2 W isolated output
- single unregulated output
- 3,000 Vdc isolation
- continuous short circuit protection
- extended temperature range (-40~105°C)
- efficiency up to 85%
- EN 62368-1



RoHS CE

MODEL

MODEL	input voltage typ (Vdc)	input voltage range (Vdc)	output voltage (Vdc)	output current min (mA)	output current max (mA)	output power max (W)	ripple & noise[1] max (mVp-p)	efficiency[2] typ (%)
PESE2-S12-S5-M	12	10.8~13.2	5	40	400	2	150	83
PESE2-S12-S9-M[4]	12	10.8~13.2	9	22	222	2	150	83
PESE2-S12-S12-M	12	10.8~13.2	12	17	167	2	150	84
PESE2-S12-S15-M	12	10.8~13.2	15	13	133	2	150	84
PESE2-S12-S24-M	12	10.8~13.2	24	8	83	2	150	85
PESE2-S15-S5-M[4]	15	13.5~16.5	5	40	400	2	150	83
PESE2-S15-S15-M	15	13.5~16.5	15	13	133	2	150	84
PESE2-S24-S5-M	24	21.6~26.4	5	40	400	2	150	83
PESE2-S24-S9-M	24	21.6~26.4	9	22	222	2	150	83
PESE2-S24-S12-M	24	21.6~26.4	12	17	167	2	150	84
PESE2-S24-S15-M	24	21.6~26.4	15	13	133	2	150	84
PESE2-S24-S24-M	24	21.6~26.4	24	8	83	2	150	85

Notes:
1. Measured at nominal input, 20 MHz bandwidth oscilloscope with 10 µF tantalum and 1 µF ceramic capacitor on output (see Application circuit).
2. Measured at nominal input voltage, full load.
3. All specifications are measured at Ta=25°C, humidity < 75%, nominal input voltage, and rated output load unless otherwise specified.
4. Model is not CE certified.

PART NUMBER KEY

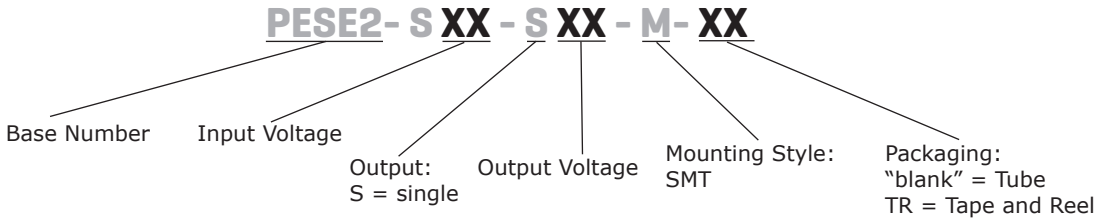

INPUT

parameter	conditions/description	min	typ	max	units
operating input voltage	12 Vdc input models 15 Vdc input models 24 Vdc input models	10.8 13.5 21.6	12 15 24	13.2 16.5 26.4	Vdc Vdc Vdc
surge voltage	for maximum of 1 second 12 Vdc input models 15 Vdc input models 24 Vdc input models	 -0.7 -0.7 -0.7		 18 21 30	 Vdc Vdc Vdc
current	12 Vdc input models 15 Vdc input models 24 Vdc input models			196 161 98	mA mA mA
filter	filter capacitor				

OUTPUT

parameter	conditions/description	min	typ	max	units
maximum capacitive load[4]	5 Vdc output models 9 Vdc output models 12, 15 Vdc output models 24 Vdc output models			2,400 1,000 560 220	µF µF µF µF
voltage accuracy	see output regulation curves				
line regulation	for Vin change of ±1%			±1.2	%
load regulation	from 10% to full load 5 Vdc output models all other models			 ±15 ±10	 % %
switching frequency	100% load, nominal input voltage		260		kHz
temperature coefficient	at full load		±0.02		%/°C

Note: 4. Tested at input voltage range and full load.

PROTECTIONS

parameter	conditions/description	min	typ	max	units
short circuit protection	continuous, auto recovery				

SAFETY AND COMPLIANCE

parameter	conditions/description	min	typ	max	units
isolation voltage	input to output for 1 minute at 1 mA	3,000			Vdc
isolation resistance	input to output at 500 Vdc	1,000			MΩ
isolation capacitance	input to output, 100 kHz / 0.1 V		20		pF
safety approvals	certified to 62368: EN, IEC				
conducted emissions	CISPR 32/EN 55032 Class B				
radiated emissions	CISPR 32/EN 55032 Class B				
ESD	IEC/EN 61000-4-2 Air ±8kV, Contact ±6kV				
MTBF	as per MIL-HDBK-217F, 25°C	3,500,000			hours
RoHS	yes				

ENVIRONMENTAL

parameter	conditions/description	min	typ	max	units
operating temperature	see derating curves	-40		105	°C
storage temperature		-55		125	°C
storage humidity	non-condensing	5		95	%
case temperature rise	at 25°C		25		°C

DERATING CURVES

TEMPERATURE DERATING CURVE

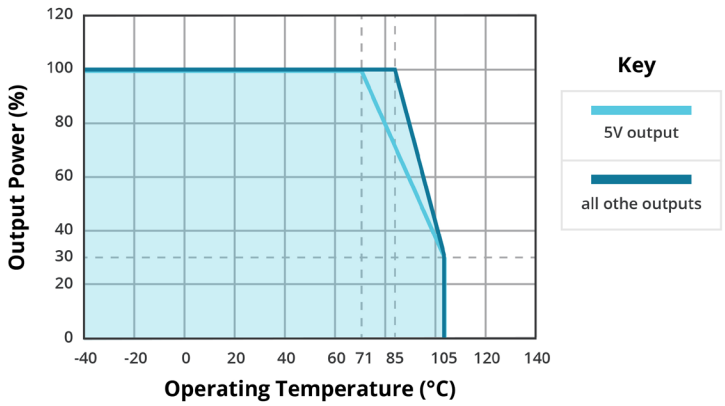

OUTPUT REGULATION CURVE (nominal input)

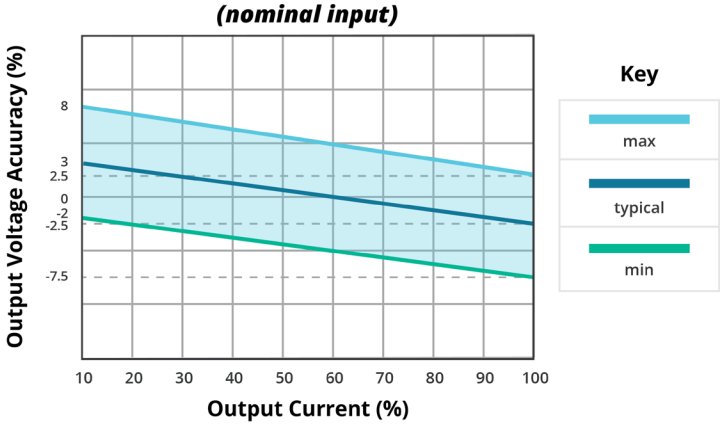

EFFICIENCY CURVES

EFFICIENCY VS INPUT VOLTAGE PESE2-S12-S5-M (full load)

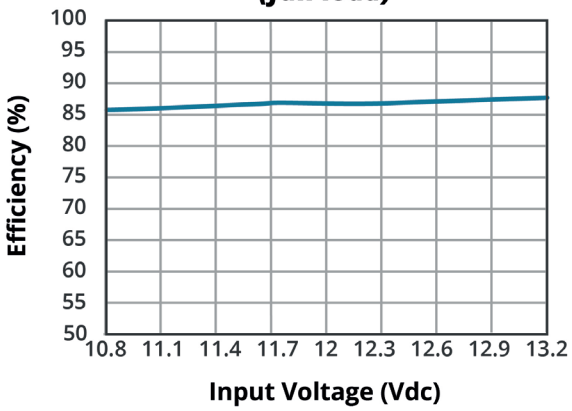

EFFICIENCY VS OUTPUT LOAD PESE2-S12-S5-M (Vin = 12 V)

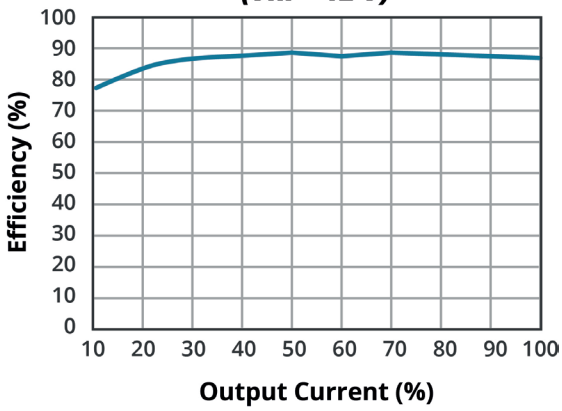

EFFICIENCY VS INPUT VOLTAGE PESE2-S24-S5-M (full load)

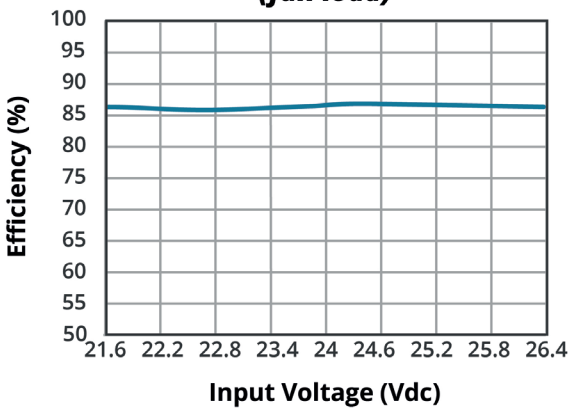

EFFICIENCY VS OUTPUT LOAD PESE2-S24-S5-M (Vin = 24 V)

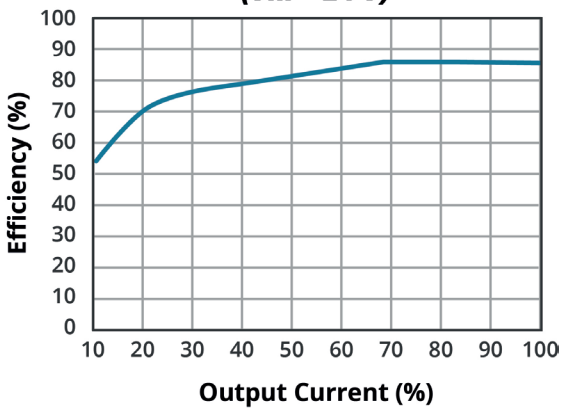

MECHANICAL

parameter	conditions/description	min	typ	max	units
dimensions	13.20 x 11.40 x 7.25 [0.520 x 0.448 x 0.285 inch]				mm
case material	black flame-retardant and heat-resistant plastic (UL94V-0)				
weight			1.4		g

MECHANICAL DRAWING

units: mm [inch]
tolerance: ±0.25 [±0.010]
pin section tolerance: ±0.10 [±0.004]

PIN CONNECTIONS	
PIN	Function
1	GND
2	Vin
4	0V
5	+Vo
8	NC

NC = No connect

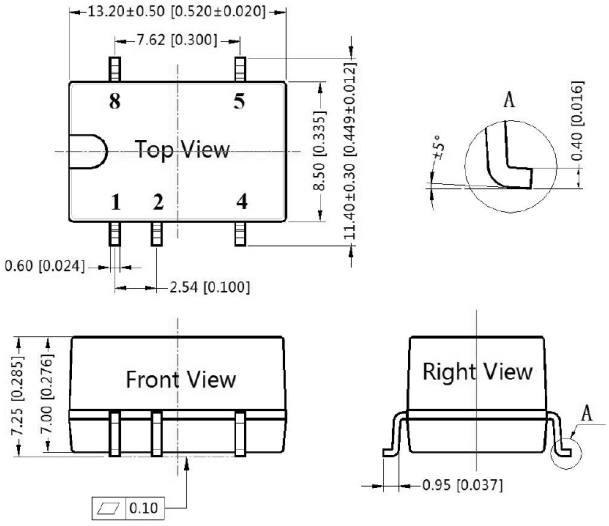

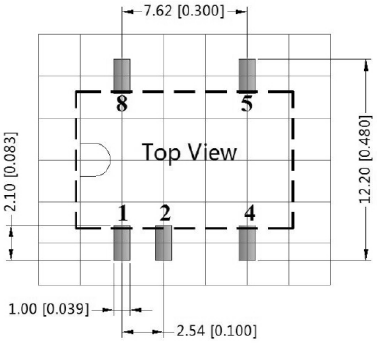

Note: Grid 2.54*2.54mm

APPLICATION CIRCUIT

If you want to further reduce the input and output ripple, a filter capacitor may be connected to the input and output terminals (Figure 1) provided that the capacitance is less than the maximum capacitive load of the model, otherwise start-up problems may be caused if the capacitance is too large.

Figure 1

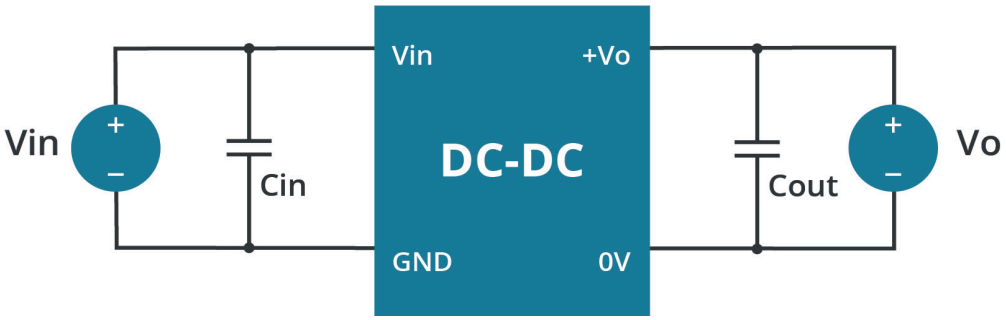

Table 1

Vin (Vdc)	Cin (µF / V)	Vo (Vdc)	Cout (µF / V)
12	2.2 / 25	5	10 / 10
15	1 / 25	9	2.2 / 25
24	1 / 50	12	2.2 / 25
---	---	15	1 / 25
---	---	24	0.47 / 50

EMC RECOMMENDED CIRCUIT

Figure 2

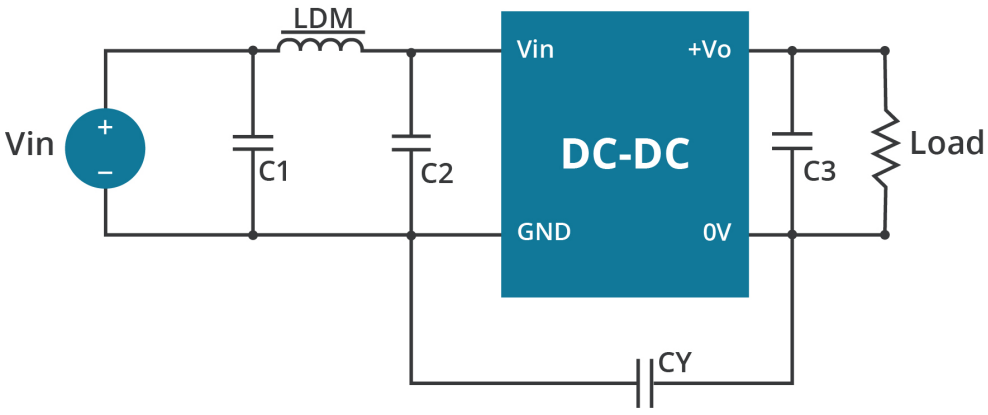

Table 3

Recommended External Circuit Components	
C1, C2	4.7 µF / 50 V
C3	refer to the Cout in Table 1
CY	270 pF / 3 kV
LDM	6.8 µH

REVISION HISTORY

rev.	description	date
1.0	initial release	07/23/2021
1.01	model table updated	01/05/2022
1.02	CE certification added to PESE2-S15-S15-M	08/11/2022

The revision history provided is for informational purposes only and is believed to be accurate.

CUI INC
a bel group

Headquarters
20050 SW 112th Ave.
Tualatin, OR 97062
800.275.4899

Fax 503.612.2383
cui.com
techsupport@cui.com

CUI offers a two (2) year limited warranty. Complete warranty information is listed on our website.

CUI reserves the right to make changes to the product at any time without notice. Information provided by CUI is believed to be accurate and reliable. However, no responsibility is assumed by CUI for its use, nor for any infringements of patents or other rights of third parties which may result from its use.

CUI products are not authorized or warranted for use as critical components in equipment that requires an extremely high level of reliability. A critical component is any component of a life support device or system whose failure to perform can be reasonably expected to cause the failure of the life support device or system, or to affect its safety or effectiveness.