2N2484

NPN SILICON TRANSISTOR

TO-18 CASE

www.centralsemi.com

DESCRIPTION:
The CENTRAL SEMICONDUCTOR 2N2484 type is an NPN silicon transistor designed for low noise amplifier applications.

MARKING: FULL PART NUMBER

MAXIMUM RATINGS: (T_A=25°C)	**SYMBOL**		**UNITS**
Collector-Base Voltage	V_{CBO}	60	V
Collector-Emitter Voltage	V_{CEO}	60	V
Emitter-Base Voltage	V_{EBO}	6.0	V
Continuous Collector Current	I_C	50	mA
Power Dissipation	P_D	360	mW
Operating and Storage Junction Temperature	T_J, T_{stg}	-65 to +200	°C
Thermal Resistance	Θ_{JA}	486	°C/W

ELECTRICAL CHARACTERISTICS: (T_A=25°C unless otherwise noted)

SYMBOL	**TEST CONDITIONS**	**MIN**	**MAX**	**UNITS**
I_{CBO}	V_{CB}=45V		10	nA
I_{CBO}	V_{CB}=45V, T_A=150°C		10	µA
I_{CEO}	V_{CE}=5.0V		2.0	nA
I_{EBO}	V_{EB}=5.0V		10	nA
BV_{CBO}	I_C=10µA	60		V
BV_{CEO}	I_C=10mA	60		V
BV_{EBO}	I_E=10µA	6.0		V
$V_{CE(SAT)}$	I_C=1.0mA, I_B=100µA		0.35	V
$V_{BE(ON)}$	V_{CE}=5.0V, I_C=100µA	0.5	0.7	V
h_{FE}	V_{CE}=5.0V, I_C=1.0µA	30		
h_{FE}	V_{CE}=5.0V, I_C=10µA	100	500	
h_{FE}	V_{CE}=5.0V, I_C=10µA, T_A=-55°C	20		
h_{FE}	V_{CE}=5.0V, I_C=100µA	175		
h_{FE}	V_{CE}=5.0V, I_C=500µA	200		
h_{FE}	V_{CE}=5.0V, I_C=1.0mA	250		
h_{FE}	V_{CE}=5.0V, I_C=10mA		800	
h_{fe}	V_{CE}=5.0V, I_C=1.0mA, f=1.0kHz	150	900	
f_T	V_{CE}=5.0V, I_C=50µA, f=5.0MHz	15		MHz
f_T	V_{CE}=5.0V, I_C=0.5mA, f=30MHz	60		MHz
h_{ie}	V_{CE}=5.0V, I_C=1.0mA, f=1.0kHz	3.5	24	kΩ
h_{oe}	V_{CE}=5.0V, I_C=1.0mA, f=1.0kHz		40	µS
h_{re}	V_{CE}=5.0V, I_C=1.0mA, f=1.0kHz		800	$x10^{-6}$
C_{ob}	V_{CB}=5.0V, I_E=0, f=140kHz		6.0	pF
C_{ib}	V_{EB}=0.5V, I_C=0, f=140kHz		6.0	pF

R1 (30-May 2012)

2N2484

NPN SILICON TRANSISTOR

ELECTRICAL CHARACTERISTICS - Continued: (T_A=25°C unless otherwise noted)

SYMBOL	TEST CONDITIONS	MAX	UNITS
NF	V_{CE}=5.0V, I_C=10μA, R_S=10kΩ BW=15.7kHz, 3.0dB PTS @ 10Hz, 10kHz	3.0	dB
NF	V_{CE}=5.0V, I_C=10μA, R_S=10kΩ, f=100Hz, BW=20Hz	10	dB
NF	V_{CE}=5.0V, I_C=10μA, R_S=10kΩ, f=1.0kHz, BW=200Hz	3.0	dB
NF	V_{CE}=5.0V, I_C=10μA, R_S=10kΩ, f=10kHz, BW=2.0kHz	2.0	dB

TO-18 CASE - MECHANICAL OUTLINE

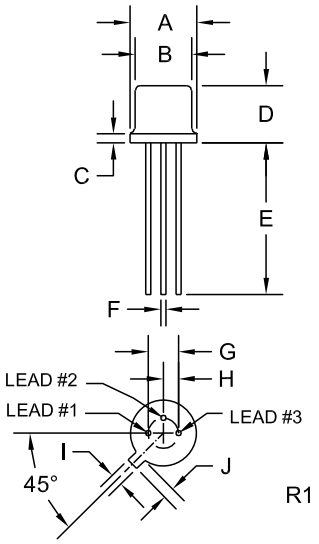

DIMENSIONS				
	INCHES		MILLIMETERS	
SYMBOL	MIN	MAX	MIN	MAX
A (DIA)	0.209	0.230	5.31	5.84
B (DIA)	0.178	0.195	4.52	4.95
C	-	0.030	-	0.76
D	0.170	0.210	4.32	5.33
E	0.500	-	12.70	-
F (DIA)	0.016	0.019	0.41	0.48
G (DIA)	0.100		2.54	
H	0.050		1.27	
I	0.036	0.046	0.91	1.17
J	0.028	0.048	0.71	1.22

TO-18 (REV: R1)

LEAD CODE:
1) Emitter
2) Base
3) Collector

MARKING:
FULL PART NUMBER

R1 (30-May 2012)

OUTSTANDING SUPPORT AND SUPERIOR SERVICES

PRODUCT SUPPORT

Central's operations team provides the highest level of support to insure product is delivered on-time.

- Supply management (Customer portals)
- Inventory bonding
- Consolidated shipping options
- Custom bar coding for shipments
- Custom product packing

DESIGNER SUPPORT/SERVICES

Central's applications engineering team is ready to discuss your design challenges. Just ask.

- Free quick ship samples (2nd day air)
- Online technical data and parametric search
- SPICE models
- Custom electrical curves
- Environmental regulation compliance
- Customer specific screening
- Up-screening capabilities
- Special wafer diffusions
- PbSn plating options
- Package details
- Application notes
- Application and design sample kits
- Custom product and package development

REQUESTING PRODUCT PLATING

1. If requesting Tin/Lead plated devices, add the suffix " TIN/LEAD" to the part number when ordering (example: 2N2222A TIN/LEAD).
2. If requesting Lead (Pb) Free plated devices, add the suffix " PBFREE" to the part number when ordering (example: 2N2222A PBFREE).

CONTACT US

Corporate Headquarters & Customer Support Team

Central Semiconductor Corp.
145 Adams Avenue
Hauppauge, NY 11788 USA
Main Tel: (631) 435-1110
Main Fax: (631) 435-1824
Support Team Fax: (631) 435-3388
www.centralsemi.com

Worldwide Field Representatives:
www.centralsemi.com/wwreps

Worldwide Distributors:
www.centralsemi.com/wwdistributors

For the latest version of Central Semiconductor's **LIMITATIONS AND DAMAGES DISCLAIMER**, which is part of Central's Standard Terms and Conditions of sale, visit: www.centralsemi.com/terms