TERMINAL P/N (CHAIN)	PLATING	
	CONTACT	UNDERPLATING
151087-8999	UNPLATED	
151087-8101	2.50µm MIN MATTE TIN OVERALL	1.25µm MIN NI OVERALL
151087-8201	0.05µm AU MIN	
151087-8301	0.38µm AU MIN	
151087-8401	0.75µm AU MIN	

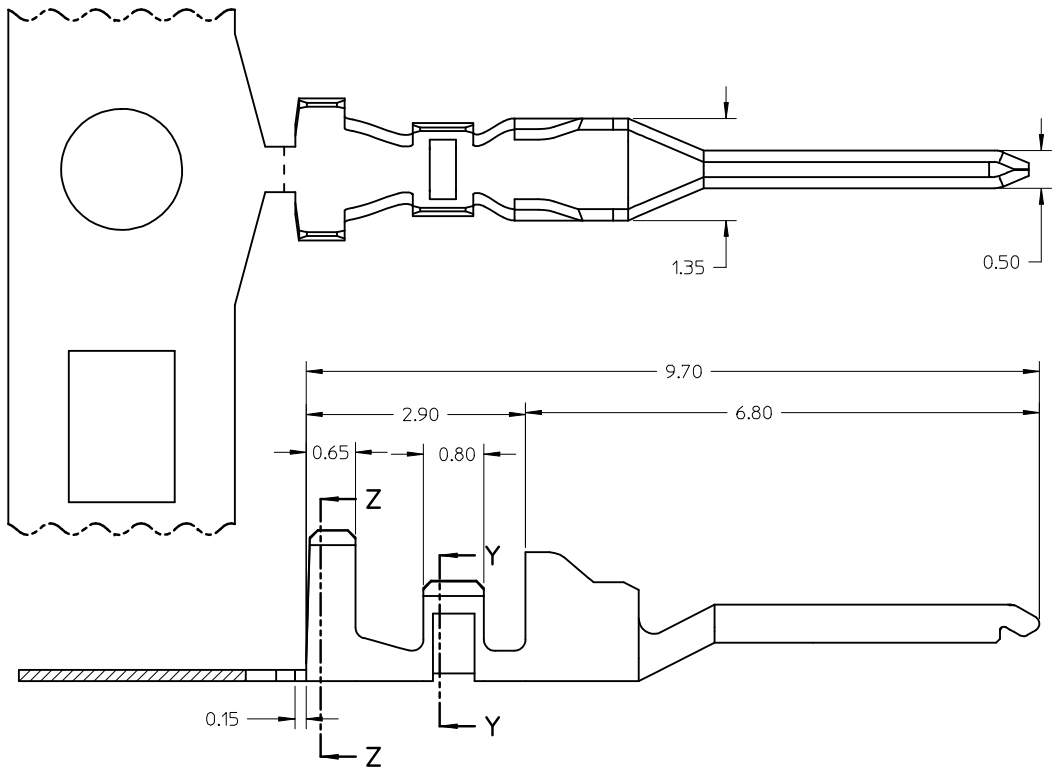

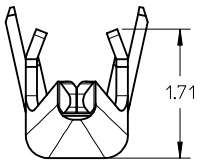

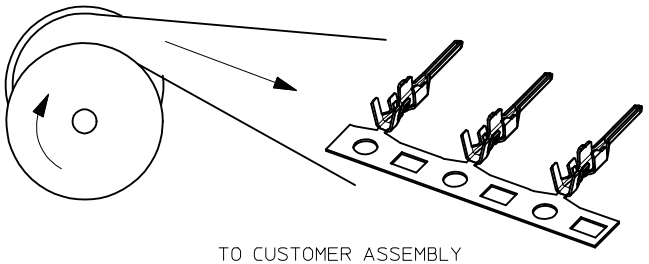

TO CUSTOMER ASSEMBLY

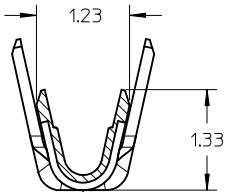

SECTION Y-Y

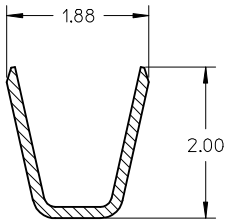

SECTION Z-Z

NOTES:
1. MATERIAL: COPPER ALLOY, THICKNESS: 0.15mm
2. FINISHES: REFER TO TABLE
3. PRODUCT SPECIFICATION: PS-151087-0001
4. PACKAGING SPECIFICATION: PK-151087-0001
5. APPLICABLE TO HOUSING: 151098-****
6. TO BE USED WITH #24-30 AWG INSULATION STRANDED WIRE.

REMOVE LOOSE OPT
EC NO: S2016-0449
DRWN:FCS00 2015/11/05
CH'KD:CGOH 2016/02/16
APPR:KHLIM 2016/02/16
DESCRIPTION
A
REV

QUALITY SYMBOLS
FA=0
FC=0
FB=0

GENERAL TOLERANCES (UNLESS SPECIFIED)

	mm	INCH
4 PLACES	± ---	± ---
3 PLACES	± ---	± ---
2 PLACES	± 0.20	± ---
1 PLACE	± ---	± ---
0 PLACE	± ---	± ---

ANGULAR ± 3 °
DRAFT WHERE APPLICABLE MUST REMAIN WITHIN DIMENSIONS

DIMENSION STYLE: MM ONLY
SCALE: NTS
DESIGN UNITS: METRIC
THIRD ANGLE PROJECTION

DRAWN BY: FCS00 DATE: 2015/01/08
CHECKED BY: FCS00 DATE: 2015/01/08
APPROVED BY: KHLIM DATE: 2016/02/16

TITLE
SALES DRAWING
MALE CRIMP TERMINAL
SINGLE ROW MILLIGRID

molex

MATERIAL NO.: SEE TABLE
DOCUMENT NO.: SD-151087-0001
SHEET NO.: 1 OF 1
SIZE: A3

THIS DRAWING CONTAINS INFORMATION THAT IS PROPRIETARY TO MOLEX INCORPORATED AND SHOULD NOT BE USED WITHOUT WRITTEN PERMISSION