Atlas Scientific™
Environmental Robotics
V 3.0

3/4" Flow Meter

Reads	**Total flow and flow rate**
Range	**19 L/min – 114 L/min**
Accuracy	**+/– 10%**
Connector	**Tinned leads**
Thread	**3/4" Female NPT**
Max pressure	**200 PSI**
Temperature range °C	**-29 – 100 °C**
Max viscosity	**200 SSU**
Cable length	**69cm (27.1")**
Voltage	**4.0V – 24 VDC**
Life expectancy	**~10 years**

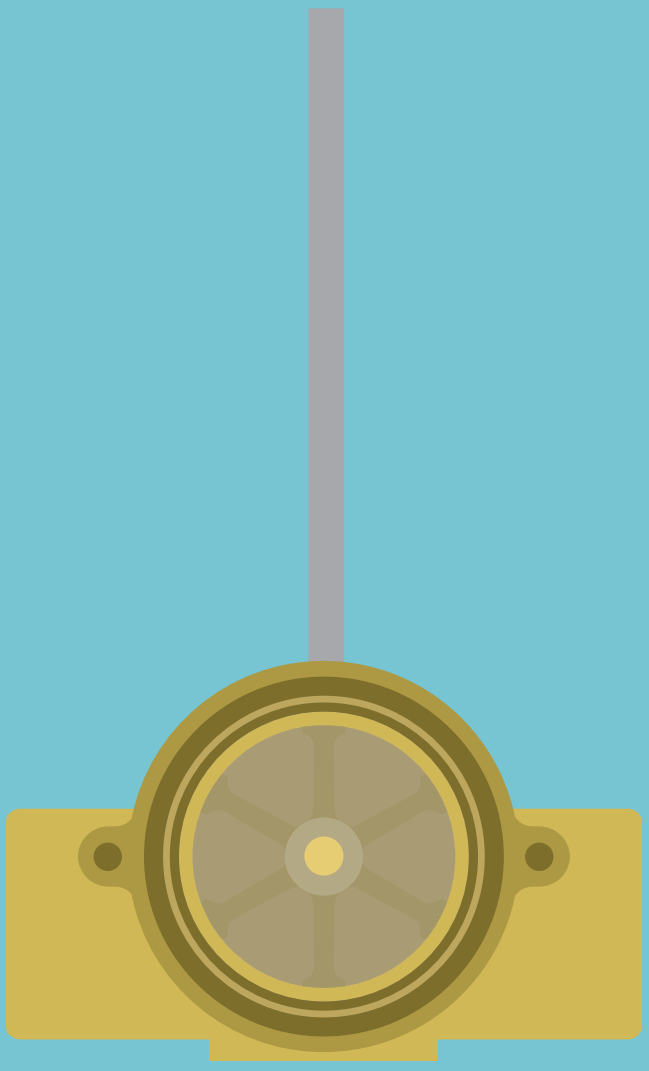

RoHS COMPLIANT

Written by Jordan Press
Designed by Noah Press

Measurements

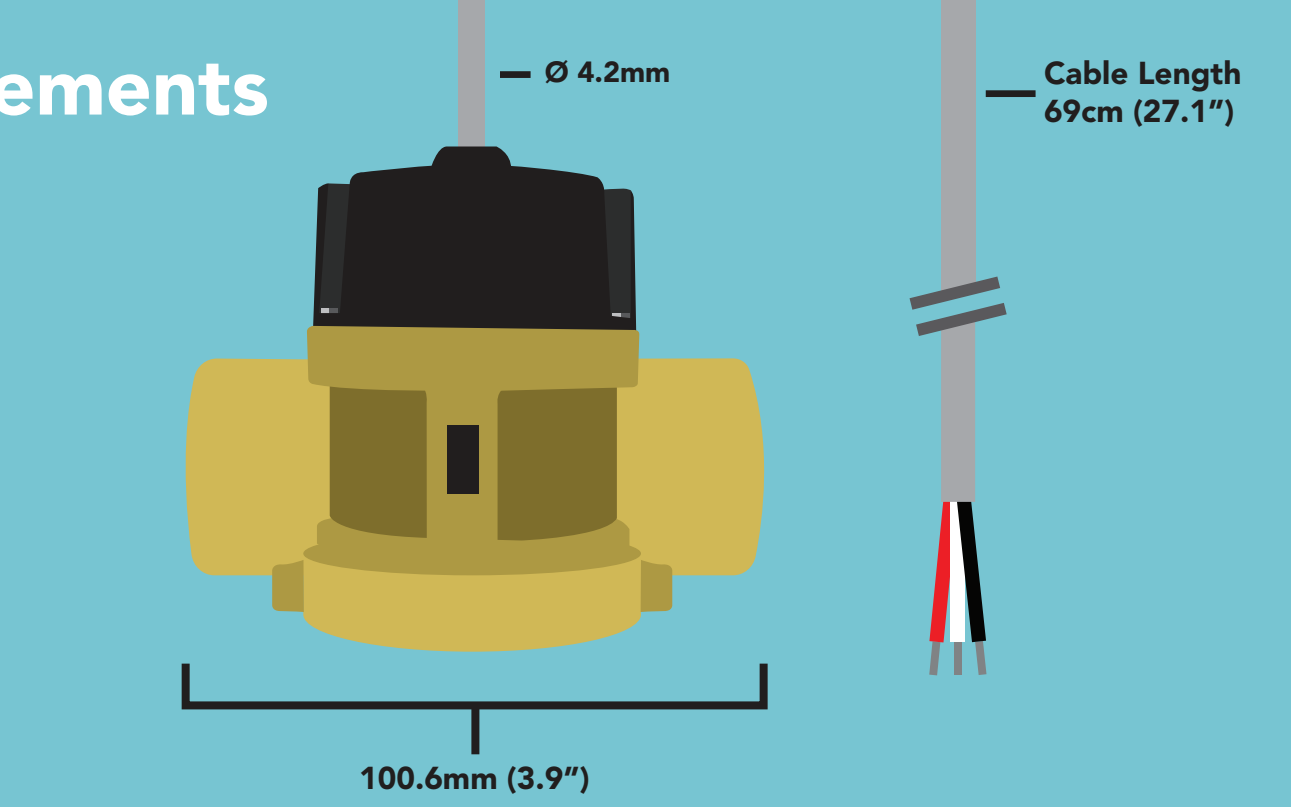

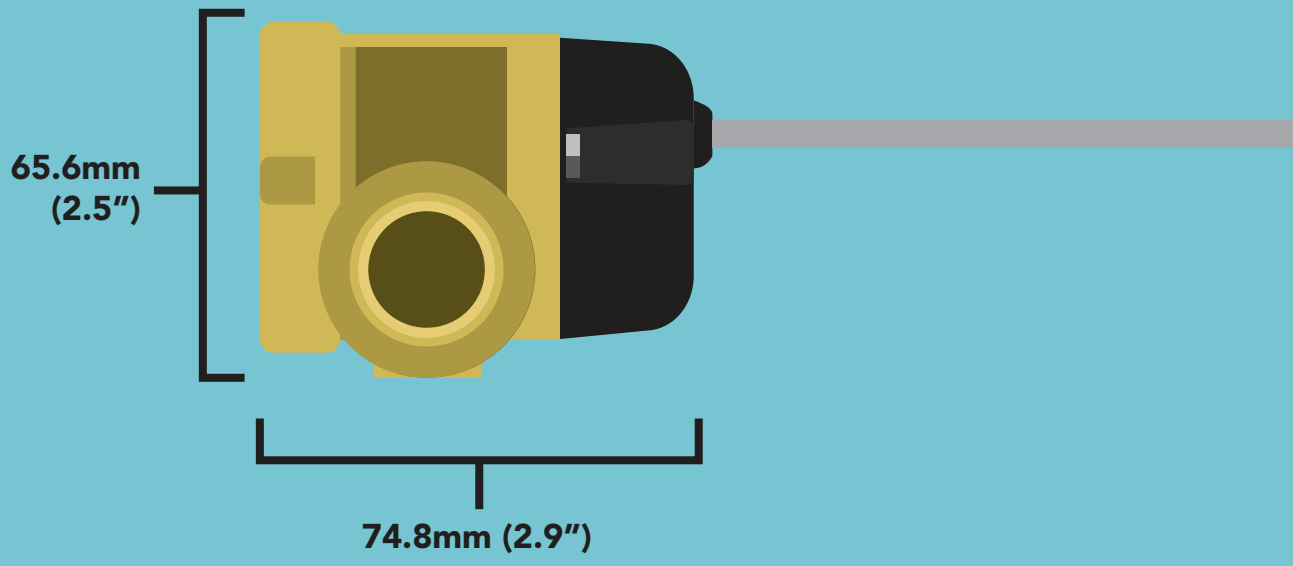

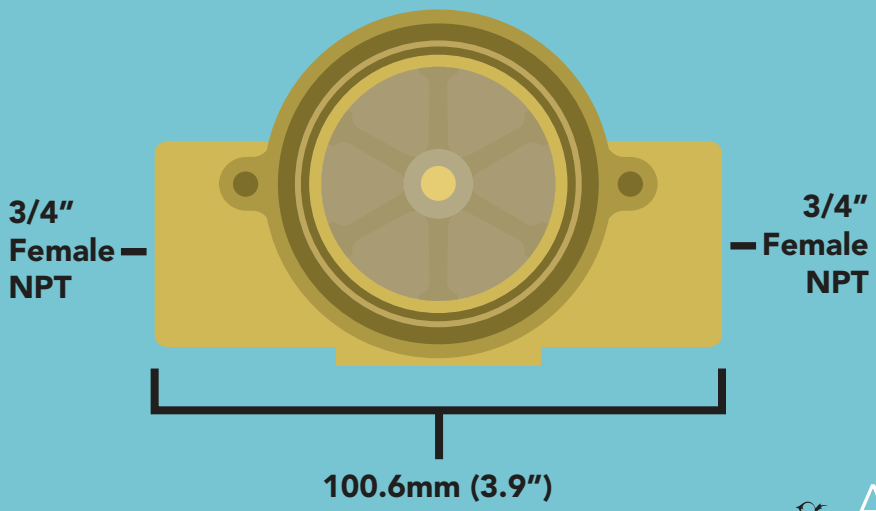

Copyright © Atlas Scientific LLC

AtlasScientific™
Environmental Robotics

Wiring

The Atlas Scientific 3/4" Flow Meter has a 69cm (27.1") cable that terminates with three tinned leads; Red (VCC), White (Pulse), and Black (Ground).



Lead Color	Function
RED	VCC 4.0V – 24V
White	PULSE
BLACK	GND

Current consumption no load 8mA
Max current consumption 70mA

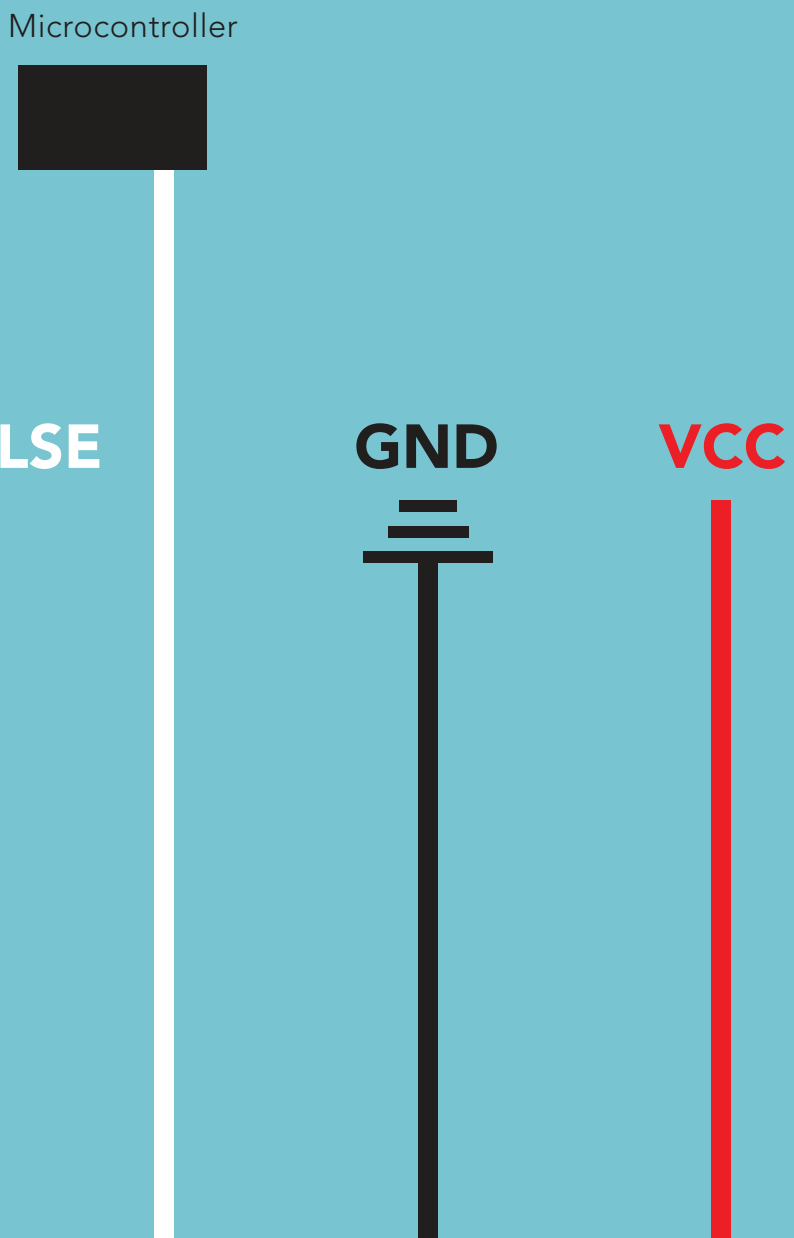

Specifications

Data output	**Square wave**
Max pressure	**200 PSI**
Max viscosity	**200 SSU**
Cable length	**69 cm**
Weight	**796.5 grams**
Food Safe	**Yes**
Gasoline Safe	**Yes**
Diesel Safe	**Yes**
Kerosene Safe	**Yes**

NSF/ANSI 61 Compliant

Atlas Scientific LLC, hereby certifies that,

3/4" Flow Meter
Part # Sen-205F

Complies with NSF/ANSI Standard 61

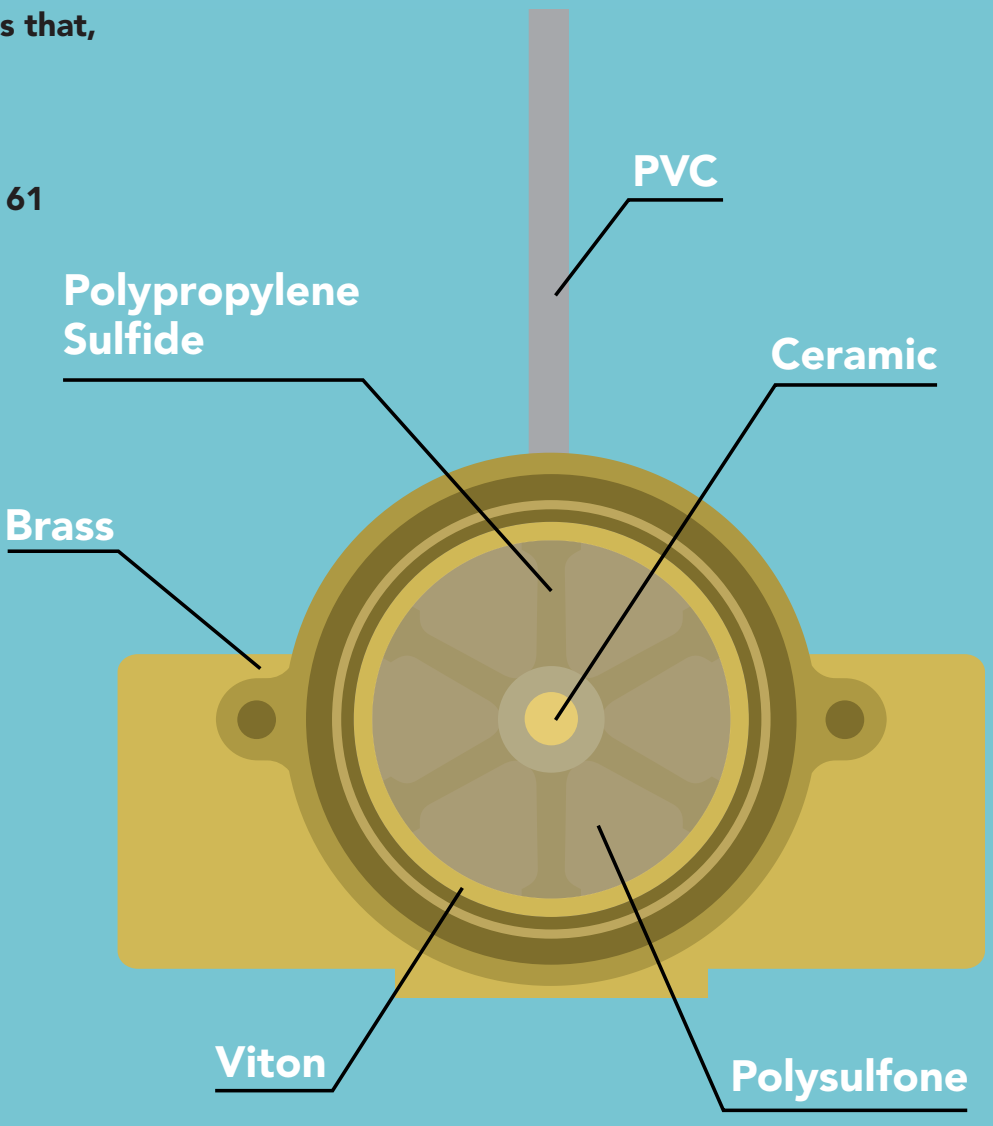

- **PVC** NSF-61 Compliant
- **Brass** NSF-61 Compliant
- **Viton** NSF-61 Compliant
- **Ceramic** NSF-61 Compliant
- **Polysulfone** NSF-61 Compliant
- **Polypropylene Sulfide** NSF-61 Compliant

Copyright © Atlas Scientific LLC

Operating principle

Paddle wheel flow meters like the Atlas Scientific 3/4" Flow Meter use frequency to calculate water flow. As water passes through the flow meter, the magnetic rotor spins at a rate proportional to the flow, producing a frequency. The relationship between water frequency and volume is not linear; an equation to convert the frequency to volume is found at the end of this document.

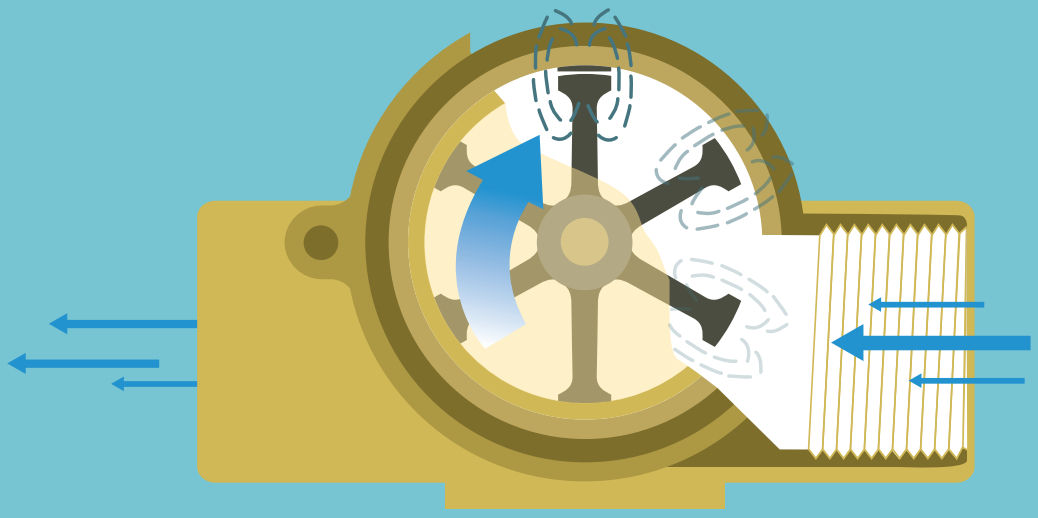

This flow meter is intended for high flow ranges from 19 L/min (5GPM) up to 114 L/min (30 GPM).

Pre-filter requirements

If water with particulate matter will be passing through the flow meter, a pre-filter of at least ***80 microns*** must be used. Without the use of a pre-filter, the turbine blades can become jammed. Jammed turbine blades will not damage the flow meter; however, it will not be possible to get accurate flow readings until the blockage has been cleared.

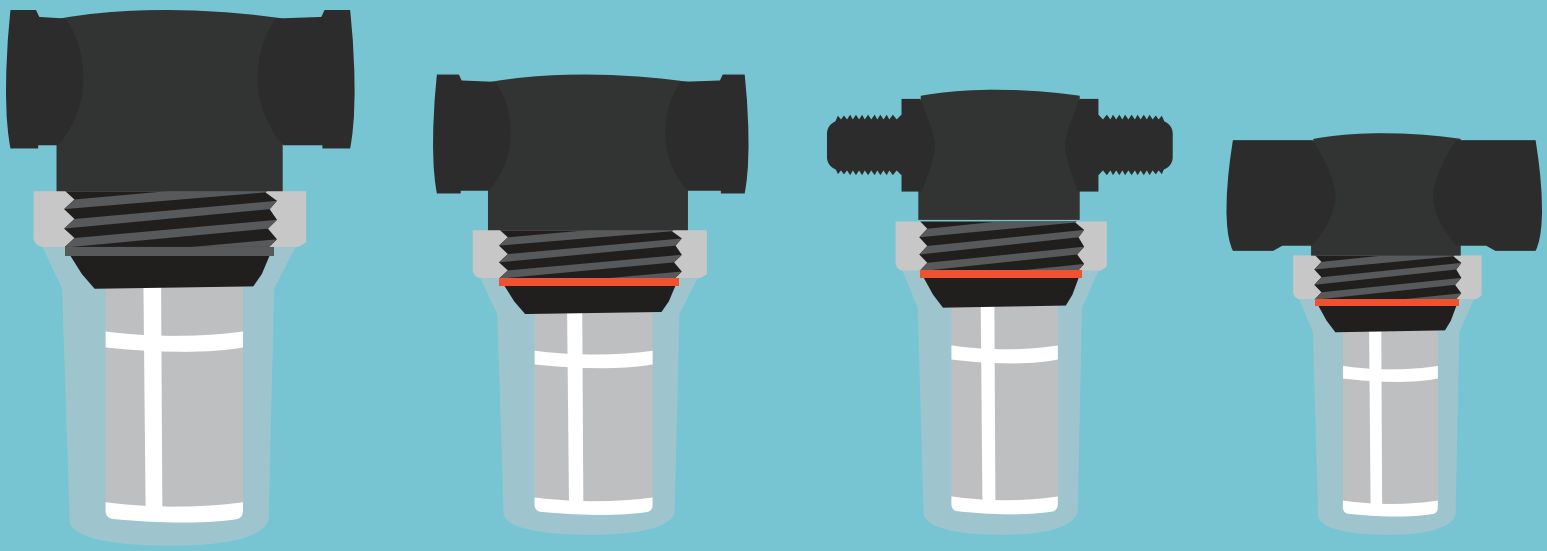

3/4" Pre-filter

1/2" Pre-filter

1/4" Pre-filter

3/8" Pre-filter

Laminar flow

Laminar flow can be thought of as the opposite of turbulent flow. In order for the flow meter to work properly, the liquid entering the flow meter should have a streamlined laminar flow. Achieving laminar flow is not hard to do; simply allow for 20cm (8”) of straight pipe just before the liquid enters the flow meter.

Turbulent fluid entering the flow meter can cause inaccuracies in flow rate monitoring.

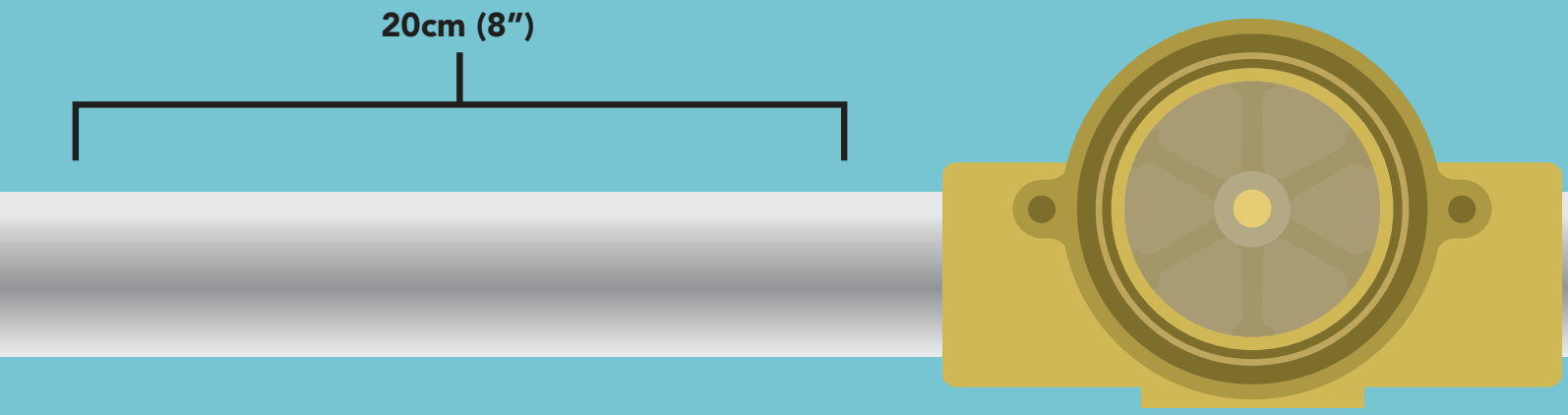

Laminar flow

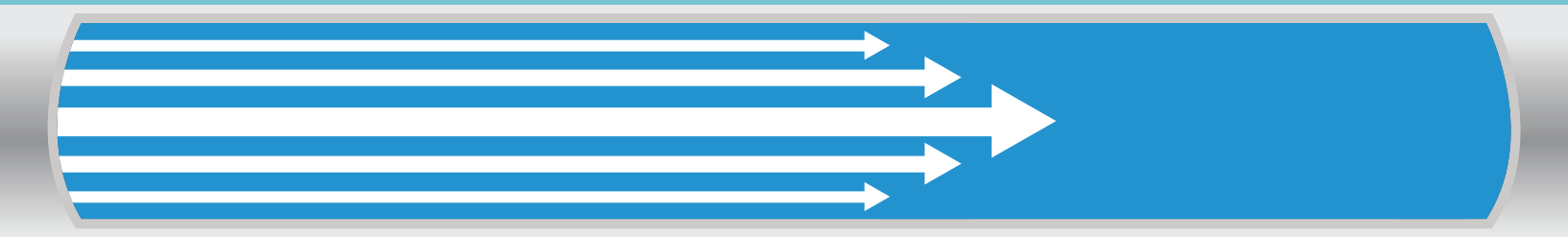

Turbulent flow

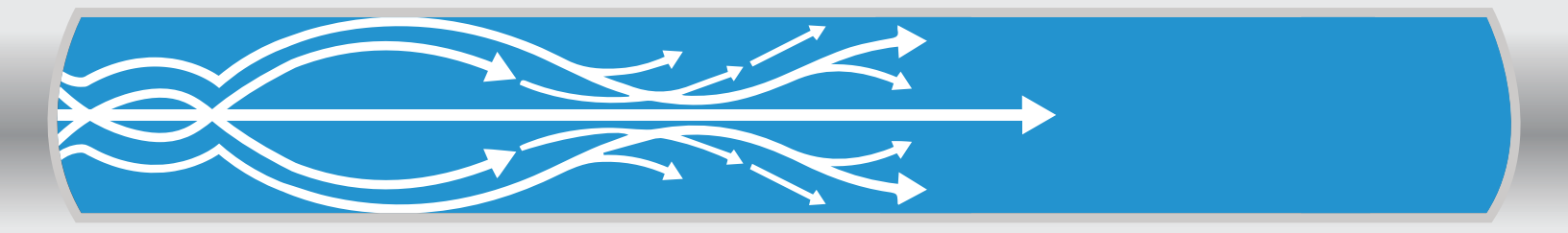

Copyright © Atlas Scientific LLC

Liquid exiting the flow meter

Liquid should not be permitted to simply fall out of the flow meter. This would let air enter the flow meter and lead to inaccurate readings.

FOR ACCURATE READINGS, YOU CANNOT HAVE AIR IN THE LINE.

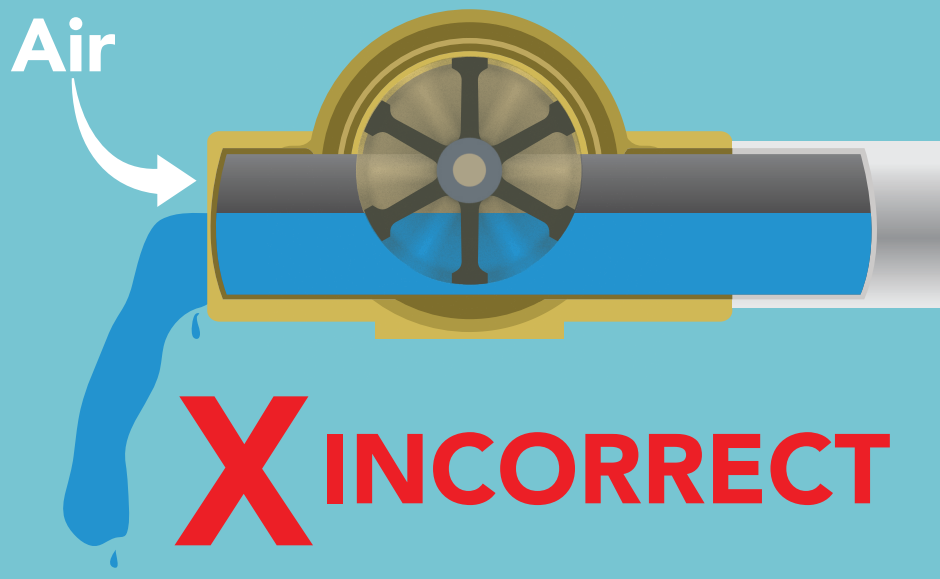

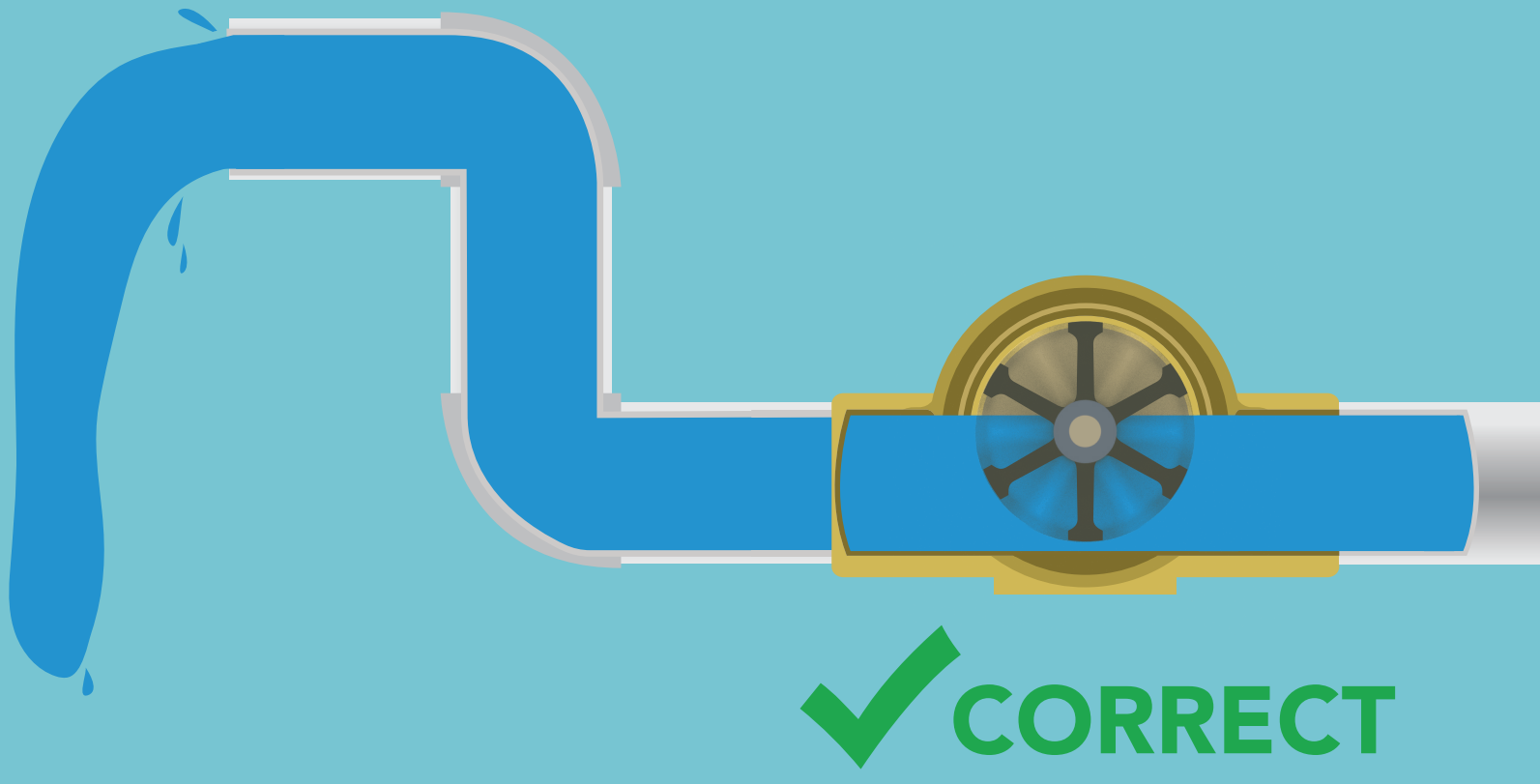

Copyright © Atlas Scientific LLC

AtlasScientific™ Environmental Robotics

Data output

The white lead from the 3/4" Flow Meter will output a square wave frequency from 0 – 200+ Hz. The amplitude of the frequency will always equal the VCC. A single pules is a rising edge followed by a falling edge.



A single pulse does not represent a fixed volume a liquid.

The amount of liquid moving through the flow meter is quantified by the frequency that the flow meter outputs. This is known as the flow meters K-factor.

K-factor

As stated earlier, paddle wheel flow meters use frequency to calculate water flow. The relationship between frequency and volume is not linear. Here is the equation that needed to calculate the volume.

GPM	LPM	Output Frequency – Hz
1.5	5.7	17
2	7.6	25.9
2.5	9.5	34
3	11.4	43
4	15.2	60
5	19	76.6

LPM = 0.5536 x [Hz] + 5.1462

Copyright © Atlas Scientific LLC

Atlas Scientific™ Environmental Robotics